Shaw™ Shaw Environmental, Inc.

Maxey Flats Disposal Site
Initial Remedial Phase
Remedial Design/Remedial Action
Morehead, Kentucky

Operation and Maintenance Requirements Summary for the Initial Remedial Phase Remedial Action

Prepared by:

Shaw Maxey Flats Project Team

September 2003
Addendum

Table of Contents

Page

List of Tables v
List of Figures v
List of Acronyms vi
1.0 Introduction 1-1
1.1 Objective 1-1
1.2 Document Organization 1-1
2.0 General Information 2-1
2.1 Site Background 2-1
2.2 Operation and Maintenance Inspections 2-1
2.3 Operation and Maintenance and Repairs 2-2
2.4 Operation and Maintenance Quality Control Inspections 2-2
2.5 Operation and Maintenance Reporting 2-2
2.6 Personnel Requirements 2-3
2.7 Equipment Requirements 2-3
3.0 Initial Remedial Phase Cap 3-1
3.1 Geomembrane Liner 3-1
3.1.1 Geomembrane Liner Maintenance 3-1
3.1.2 Geomembrane Liner Boots 3-3
3.1.3 Extended Sumps and Monitoring Devices 3-3
3.2 Headwalls 3-5
3.2.1 Headwall Structure 3-5
3.2.2 Headwall Battens 3-5
3.2.3 Collection Sump at the Headwalls 3-6
3.3 Subsidence 3-6
3.3.1 Permanent Site Control Monuments 3-6
3.3.2 Control Points 3-7
3.3.3 Subsidence Monitoring 3-7
3.4 Drainage Channels, Diversion Berms, and Anchor Trenches 3-8
3.4.1 Drainage Channels 3-8
3.4.2 Diversion Berms 3-9
3.4.3 Anchor Trenches 3-9
3.5 Articulating Concrete Block System 3-10

Table of Contents (Continued)

Page

3.5.1 Articulating Concrete Block Mats 3-10
3.5.2 Cementitious Fill Material 3-11
3.5.3 Geomembrane Liner Flaps 3-12
3.5.4 Dead-Man Structures 3-13
3.5.4.1 Dead-Man Structure at Interior Y-Channel Inlet 3-13
3.5.4.2 Dead-Man Structure at Southeast Perimeter Channel Inlet 3-14
3.6 Northeast Corner Piping 3-14
3.7 Former Leachate Storage Facility Area 3-15
3.7.1 Former Leachate Storage Facility Tank Extensions 3-15
3.7.2 Former Leachate Storage Facility Tank Cathodic Protection 3-16
4.0 East Detention Basin 4-1
4.1 Principal Spillway 4-1
4.1.1 Riser Pipe 4-1
4.1.2 H-flume 4-1
4.1.3 Ultrasonic Flow Recorder and Rain Gauge 4-2
4.1.4 Riprap 4-2
4.2 Emergency Spillway 4-3
4.2.1 Concrete Pad 4-3
4.2.2 Gabion Basket System 4-4
4.3 Earthen Embankment 4-4
4.4 East Detention Basin Area 4-5
4.4.1 Riprap 4-5
4.4.2 Gabion Basket System 4-5
4.4.3 Y-Channel Outfall 4-6
4.4.3.1 Outfall Structure 4-6
4.4.3.2 Outfall Structure Geomembrane Liner Flap 4-7
4.4.3.3 Outfall Structure Battens 4-7
5.0 Drainage Channels Outside the Initial Remedial Phase Cap 5-1
5.1 East Main Drainage Channel 5-1
5.2 South Drainage Inlet 5-1

Table of Contents (Continued)

Page

5.2.1 Headwalls 5-1
5.2.2 Riprap 5-2
5.2.3 Gabion Baskets 5-2
6.0 Southeast Cap 6-1
6.1 Geomembrane Liner 6-1
6.2 Turf 6-1
6.3 Riprap Outlet 6-2
6.4 Southeast Cap Tie-in 6-2
7.0 General Site Components 7-1
7.1 Maxey Flats Disposal Site Roadways 7-1
7.2 Maxey Flats Disposal Site Security 7-1
7.3 Alluvial Wells 7-2
7.4 Monitoring Wells 7-3
7.5 Samplers 7-4
7.6 Erosion Monitoring of Drainage Channels 7-4
7.6.1 East Main Drainage Channel 7-4
7.6.2 South and West Drainage Channels 7-5
7.6.3 Adjacent Hill Slopes 7-5
7.7 Maxey Flats Disposal Site Liquids 7-5
7.7.1 Radioactive Contaminated Liquids Below "Free Release" Limits 7-5
7.7.2 Radioactive Contaminated Liquids Above "Free Release" Limits 7-6
7.7.2.1 Pumping, Solidification, and Disposal of Contaminated Liquids 7-6
7.8 Survey Tower 7-6
7.9 Miscellaneous Turf Areas 7-7
Appendix A – O&M Matrices
A-1 – O&M Requirements Matrix
A-2 – Inspection Frequency Matrix
A-3 – Repair Response Matrix
Appendix B – O&M Inspections
B-1 – Weekly Inspections
B-2 – Twice-a-Month Inspections

Table of Contents *(Continued)*

B-3 – Monthly Inspections

B-4 – Quarterly Inspections

B-5 – Semi-Annual Inspections

B-6 – Annual Inspection

Appendix C –Repair Procedures

C-1 – Geomembrane Liner Repair Procedure

C-2 – Sump Lid Removal/Reinstallation Procedure

C-3 – Concrete Repair Procedure

C-4 – Subsidence Repair Procedure

Appendix D – Spare Parts List

Appendix E – Manufacturer Literature and Warranty Information

E-1 – IRP Cap Geomembrane Liner Warranty

E-2 – IRP Cap Geomembrane Liner Manufacturer Data

E-3 – Data Logger Manufacturer Data

E-4 – Articulating Concrete Block Mat Manufacturer Data

E-5 – LSF Cathodic Protection System

E-6 – Riser Pipe Manufacturer Data

E-7 – H-Flume Manufacturer Data

E-8 – Ultrasonic Flow Recorder Manufacturer Data

E-9 – Gabion Manufacturer Data

E-10 – Southeast Cap Geomembrane Liner Warranty

E-11 – Fence Manufacturer Data

E-12 – Stream Sampler Manufacturer Data

Appendix F – Specifications

Appendix G – The Commonwealth of Kentucky Training Certifications

Appendix H – Concrete Specifications Provided in Technical Changes

H-1 – Cementitious Fill Material - Perimeter Drainage Channels

H-2 – Cementitious Fill Material - Interior Y-Channel

H-3 – Concrete Material - Y-Channel Outfall

Appendix I – As-Built Drawings upon IRP Cap Completion

List of Tables

Number	Title	Follows Tab
3-1	IRP Cap Sumps	
3-2	Permanent Site Control Monument Coordinates	
3-3	Subsidence Monitoring Control Point Coordinates	
7-1	Monitoring Well Status	

List of Figures

Number	Title	Follows Tab
3-1	IRP Cap Overall Site Grading Plan	
3-2	Subsidence Monitoring Control Points	
7-1	Alluvial Well Locations	
7-2	Contaminant Monitoring Locations	
7-3	East Main Drainage Channel Erosion Monitoring Cross-Section Layout	
7-4	Seeding Area Delineation	

List of Acronyms

AB-Mat	Articulating Concrete Block Mat
AC	alternating current
Commonwealth	Commonwealth of Kentucky
DAR	Design Analysis Report
DC	direct current
Drawing	As-Built Drawing
EDB	East Detention Basin
EPA	U.S. Environmental Protection Agency
HDPE	high density polypropylene
IMP	Interim Maintenance Period
IRP	Initial Remedial Phase
ISCO	ISCO, Inc.
JPS	JP Stevens Elastomerics Corporation
LSF	leachate storage facility
MFDS	Maxey Flats Disposal Site
NACE	National Association of Corrosion Engineers
NE	Northeast
O&M	Operation and Maintenance
OSHA	Occupational Safety and Health Administration
psi	pounds per square inch
PSVP	Performance Standards Verification Plan
QC	Quality Control
RA	Remedial Action
ROD	Record of Decision
RW	Remaining Work
SOW	Statement of Work
TC	Technical Change
UV	ultraviolet

1.0 Introduction

The Operation and Maintenance (O&M) Requirement Summary for the Initial Remedial Phase (IRP) Remedial Action (RA) has been prepared to identify O&M tasks the Commonwealth of Kentucky (Commonwealth) should perform during the Interim Maintenance Period (IMP) at the Maxey Flats Disposal Site (MFDS). The O&M Requirement Summary was prepared based on Task IV of the Statement of Work (SOW), Maxey Flats Consent Decree (Civil Action Number 95-58).

1.1 Objective

The O&M Requirement Summary provides details for the activities needed to maintain elements of the IRP RA upon U.S. Environmental Protection Agency (EPA) issuance of IRP Certification of Completion. The site shall be maintained in accordance with the design parameters and performance requirements pursuant to the SOW as detailed in the EPA approved Remaining Working (RW) Design Analysis Report (DAR), dated February 2000. Also, maintaining the integrity of the RA will ensure that the components are working properly for monitoring pursuant to the IMP Performance Standards Verification Plan (PSVP), Appendix C of the Commonwealth IMP Work Plan. The Commonwealth shall implement O&M inspections and activities during the IMP in accordance with the manufacturer requirements and warranty provisions provided in Appendix E. Specifications from the EPA approved RW Design Report with modifications based on Technical Changes (TCs) are included in Appendix F and may be used as an aid in maintaining the design parameters and performance requirements pursuant to the SOW.

1.2 Document Organization

The O&M Matrices (Appendix A) include synopses of O&M activities, required inspections and maintenance, along with reference documents. Section 2.0 discusses the site history, O&M inspections and activities, and personnel requirements. Sections 3.0 through 7.0 discuss the O&M requirements for the following MFDS components:

- IRP Cap
- East Detention Basin (EDB)
- Drainage Channels
- Southeast Cap
  - General Site Components
    - Erosion Monitoring
    - MFDS Roadways and Security
    - Alluvial Wells/Monitoring Wells/and Samplers
    - MFDS Liquids
    - Survey Tower.

The appendices include the O&M requirements matrices, inspection checklists, maintenance /repair procedures, quality control (QC) documentation, recommended spare parts list, warranty information, manufacturer's data, and reference specifications. The O&M Requirement Summary shall be revised, as necessary, as part of the EPA statutory 5-year review or more frequently if it is determined to be necessary.

Pursuant to Section 4.5 of the RA Work Plan for RW IRP RA, as-built drawings were prepared and included in the IRP RA Construction Report as Appendix R as both full size and 11-inch by 17-inch copies. The as-built drawings are a permanent record of IRP Cap completion and serve as a guide for maintenance. Appendix I of this report includes a 11-inch by 17-inch set of as-built drawings.

2.0 General Information

2.1 Site Background

MFDS is an inactive low-level radioactive waste site licensed by the Commonwealth. The site is located in Fleming County, Kentucky, approximately 10 miles northwest of the city of Morehead, Kentucky. The MFDS property covers approximately 720 acres of land, including a buffer zone consisting of approximately 440 acres, which was purchased pursuant to the Consent Decree to prevent deforestation and erosion of hillslopes at MFDS. The waste is buried in a fenced area designated as the Restricted Area for radiation protection purposes.

2.2 Operation and Maintenance Inspections

The inspection frequencies of O&M items are recommended guidelines and the Commonwealth has the flexibility to evaluate the systems and implement modifications to facilitate maintenance obligations. The inspection checklist and schedule frequency pertaining to the O&M general and comprehensive inspections are summarized on the Inspection Frequency Matrix (Appendix A-2). These O&M inspections are designed to verify operation and identify maintenance requirements to meet the DAR during the IMP.

General inspections are site walks noticing site components that are in need of repair; they are on a normal work day, twice-a-month, monthly, or quarterly frequency as specified in Sections 3.0 through 7.0. On a semi-annual or annual basis, comprehensive inspections shall be performed as specified in Section 3.0 through Section 7.0. The comprehensive inspections encompass thorough inspection of liner seams, integrity of structures, site topographic survey, and identification of site components in need of repair. The inspection checklist is a guideline and shall be used to identify O&M items to be inspected, maintained, items in need of repair, and document date of completion. The sample inspection checklists are provided in Appendix B.

In addition to the standard inspections, additional inspections shall be performed following severe weather conditions. Also, to the extent possible, a visual drive-through inspection should be performed during heavy rainfalls to verify proper drainage along perimeter channels. Severe weather conditions include, but are not limited to, the following: blizzards, ice storms, tornadoes, wind measuring 50 knots (58 miles per hour) or greater, approximately ¾-inch diameter hail or larger, frequent lightning, and 1.25 inches or greater of rainfall in a 24-hour period or a high intensity shorter duration storm event with an intensity of 1 inch per hour. Note, an O&M inspection performed following a severe weather event will count as a general inspection for the specified period.

If an O&M item or area requires multiple repairs, the Commonwealth may perform an engineering evaluation of the system. The Commonwealth has the flexibility to monitor the systems, perform engineering evaluations, and implement necessary modifications to facilitate ongoing maintenance obligations.

2.3 Operation and Maintenance and Repairs

Maintenance and repair activities are summarized on the Repair Response Matrix (Appendix A-3). As maintenance/repairs occur, the applicable inspections (Appendix B) and repair procedures (Appendix C) shall be "dated and initialed" documenting that the O&M item has been maintained/repaired in accordance with the reference documentation as stated in the text. Repair procedures, maintenance/repair documentation, and QC inspections for the geomembrane liner and subsidence areas are included in Appendix C. All items shall be repaired so that they perform as well or better than the design parameters as specified in the DAR.

If an O&M item is in need of repair or maintenance and cannot be serviced within the specified response time, the inspector shall document the reason. The repair or maintenance shall be completed as soon as possible and documented on the applicable inspection form in Appendix B. The Commonwealth shall keep on-site, as a minimum, the recommended materials and equipment and shall replenish in accordance with Appendix D or, as determined by the Commonwealth, during implementation of the IMP. During the course of IMP O&M at MFDS, the Commonwealth may determine additional materials and equipment are required.

2.4 Operation and Maintenance Quality Control Inspections

Upon completion of repair or maintenance of an O&M item, a QC inspection shall be performed within 2 working days in accordance with applicable specification or reference, and documented on the applicable forms in Appendices B and C as part of QC documentation. The QC inspections shall be performed by qualified personnel other than the operator or laborer who performed the repair or maintenance. The QC documentation shall also include required submittals and QC inspection data/information in accordance with applicable Specification (Appendix F) and site photographs of major repairs to document site conditions.

2.5 Operation and Maintenance Reporting

Pursuant to the Consent Decree, a semi-annual progress report shall be submitted to the EPA by the Commonwealth during the 10-year period following the Certification of Completion in accordance with the SOW. Along with the requirements pursuant to the PSVP, the inspection forms/documentation, site photographs, field daily logs, and any other documentation relative to the IRP O&M Requirement Summary shall be included in the semi-annual progress report

submitted to the EPA. A copy of the semi-annual progress report shall also be sent to the Settling Private Parties.

The Commonwealth shall submit minor and major change requests to the EPA in accordance with the EPA approved IMP Work Plan. Minor change requests are necessary measures/modifications that do not deviate from the design parameters or performance standards pursuant to the SOW establishing the design basis for the remedy at MFDS and do not require EPA approval. Major change requests are proposed changes deviating from the design basis of the EPA approved DAR.

As major change requests are submitted to the EPA by the Commonwealth, the Settling Private Parties shall receive a copy of the major change requests. Copies of the minor change requests and correspondence transmitted to EPA shall also be transmitted to the Settling Private Parties as part of the semi-annual progress reports to the EPA.

2.6 Personnel Requirements

The Commonwealth shall provide qualified personnel and operators compliant with current federal (Occupational Safety and Health Administration [OSHA]), state, and local requirements, and warranty provisions. Pursuant to the SOW, training was provided to the Commonwealth for liner installation and QC testing, sump lid removal/reinstallation, Global Water data logger removal/reinstallation, flow meter operation, and operation of the cathodic protection system. See Appendix G for documentation of training for the Commonwealth personnel.

2.7 Equipment Requirements

The Commonwealth shall determine the applicable equipment to maintain O&M items for compliance with the design parameters and performance requirements in the DAR during the IMP.

3.0 Initial Remedial Phase Cap

IRP Cap elements requiring maintenance include geomembrane liner and boots, side-slope maintenance, sumps, headwall structures, subsidence area repairs, diversion berms, anchor trenches, drainage channels, articulating concrete block mat (AB-mat) system, North Channel emergency spillway, and northeast (NE) corner piping and the former leacrate storage facility area. Refer to Figure 3-1 for the overall IRP Cap grading plan. General and comprehensive inspections will be performed according to Appendix A-2 using the applicable inspection forms in Appendix B.

3.1 Geomembrane Liner

The 45-mil reinforced polypropylene (geomembrane) liner system shall be maintained to minimize infiltration of storm water.

3.1.1 Geomembrane Liner Maintenance

A general inspection site walk will be performed monthly and following severe weather over the IRP Cap and along the side-slopes. The inspector will check for any tears, penetrations, or thin spots in the geomembrane liner, and check for soft spots or wet areas. Annually, the inspector shall walk the liner field seams, perform an Airlance Test (ASTM D 4337-84) on the exposed and accessible field seams, and visually examine the factory seams to ensure that they have not been damaged.

Any damaged areas shall be marked on the geomembrane liner and recorded on the inspection checklist (noting the location and size). The wedge welded or extruded liner seams with penetrations, soft spots or wet areas shall be tested with the applicable air-lance test or v-box, respectively. The damaged areas shall be repaired within 4 working days or prior to the next forecasted rain event, whichever is sooner. If a damaged liner area is discovered during inclement weather, it shall be repaired as soon as weather permits. Repairs to the geomembrane liner shall be made by a trained and approved welder and with a 45-mil reinforced polypropylene liner patch. The repairs shall be in accordance with the Geomembrane Liner Repair Procedure (Appendix C-1) meeting requirements in Specification 02270 - Geomembrane with reference to the manufacturer warranty (Appendix E-1), manufacturer's requirements (Appendix E-2), and the As-Built Drawings (Drawing) AB-4 through Drawing AB-8 and Drawing AB-16. If the Commonwealth should determine that the damaged area is a manufacturer's defect, a claim shall be filed in accordance with the warranty and rider in Appendix E-1. Refer to Appendix E-2 for manufacturer's data on the 45-mil reinforced polypropylene.

American Landfill Supply warrants the factory seams for a period of 20 years from the date of installation or 18 months after the final shipment of 45-mil reinforced polypropylene, whichever is sooner.

The warranty for the geomembrane liner is a 20-year prorated warranty provided by JP Stevens Elastomerics Corporation (JPS). Any warranty claim must be presented to JPS after the nonconformance of the geomembrane liner is first documented. The warranty provides for the replacement materials needed to repair a defect on a prorated cost basis so the Commonwealth is charged only for that portion of the warranted 20-year life, which has elapsed. Documentation or certificate of installation, location, and identification code of JPS product must be documented for each liner installation for the 20-year prorated warranty to be effective. See Appendix E-2 for manufacturer technical data for the geomembrane liner.

Every 5 years in conjunction with the EPA statutory 5-year review, an independent inspection shall be conducted by an engineer or qualified personnel experienced in geomembrane installation to assess the effectiveness of the IRP Cap and condition of the in-place liner. If required, performance testing should be conducted to quantitatively assess the condition of the liner. Initial material property requirements are given in Specification 02270. It should be noted that initial required property values will probably diminish somewhat throughout the expected life (20 years) of the liner due to ultraviolet (UV) degradation. Therefore, the ability of the liner to minimize storm water infiltration through the IRP Cap should be the primary criteria for deciding whether or not to replace liner material. If it is determined that the IRP Cap has reached the end of its useful life, the liner shall be replaced in accordance with common industry practices, as approved by EPA, to meet the associated construction standard in the SOW.

Changes made to the IRP Cap elevations at IRP Cap completion, other than routine maintenance, shall trigger an engineering evaluation utilizing the SEDCAD™ storm water model provided in Appendix J of the IRP RA Construction Report to model the proposed changes. The evaluation will serve as verification that the developed channel flow velocities will not undermine the AB-mat systems or damage the geomembrane liner. The items that shall be verified are:

- Not exceeding the predevelopment flow requirement for the 2-, 10-, 25-, and 100-year, 24-hour storm events at the outfall of the EDB,
- Retaining flow capacity for the 100-year, 24-hour storm event in the perimeter channels and the North Channel emergency spillway, and
- Retaining the flow capacity from the 15-inch standard project storm event within the EDB emergency spillway.

3.1.2 Geomembrane Liner Boots

Geomembrane liner boots were installed on sumps that were extended through the IRP Cap, as shown on Table 3-1 and Drawing AB-12.

A general inspection shall be performed monthly and following severe weather to inspect for any tears, penetrations, or thin spots in the geomembrane liner at the extended sump connections. Also, the inspector shall note any conditions in the geomembrane liner boot extension which may indicate maintenance items including, but not limited to, liner fatigue, accumulated water, and settlement in that area. Annually, the inspector shall verify that the liner boots are securely attached to the extended sumps and geomembrane liner and note any signs of deterioration (tears, penetrations, or thin spots) of the liner boot compromising the seal at the sump extension.

Accumulated water shall be removed within 24 hours or as necessary to prevent a health and safety concern and potential liner damage. Damaged areas shall be marked on the geomembrane liner, recorded on the inspection checklist (noting the location and size), and repaired within 4 working days or prior to the next forecasted rain event, whichever is sooner. If a damaged liner area is discovered during inclement weather, it shall be repaired as soon as weather permits. Repairs to the connection of the geomembrane liner with the geomembrane liner boots and testing shall be in accordance with Geomembrane Liner Repair Procedure (Appendix C-1) to meet requirements in Specification 02270 with reference to Drawing AB-12 through Drawing AB-14.

Areas adjacent to the extended sumps with suspected settlement at the sump extension shall be recorded on the inspection checklist and shall be backfilled, as required, to minimize liner fatigue, health and safety concerns, and potential water infiltration. The stainless steel bands shall be readjusted, as necessary, to provide a proper seal and minimize liner fatigue at the sump extension. If settlement continues at the next inspection, the area shall be filled with fill material and repaired within 60 days, or as necessary, to maintain the IRP Cap elevations and to minimize liner fatigue, health and safety concerns, and potential infiltration of water. Repairs shall be in accordance with the Subsidence Repair Procedure (Appendix C-4) and the quantities of fill shall be recorded on the applicable form in Appendix C-4.

3.1.3 Extended Sumps and Monitoring Devices

Pursuant to the Record of Decision (ROD), electronic water level monitoring devices (electronic transducers with data loggers) are installed in extended sumps along the IRP Cap area to support data collection activities for monitoring levels of liquids in existing trenches. The data collection activities will support trend analysis to detect recharge conditions and to provide data for future evaluation of possible horizontal flow barriers in accordance Section 2.3 – Sump Measurement

and Section 2.3.1 – Data Collection and Evaluation of the PSVP. The extended sumps (83) are above the IRP Cap while six sumps have been identified for potential future monitoring (dormant sumps) and are capped below the IRP Cap to permit future access and monitoring, if necessary. Refer to Drawing AB –10 and Drawing AB-11 for locations of the abandoned and dormant sumps, Drawing AB-12 for location of the extended sumps, and Drawing AB-13 for detailed information on each sump. Table 3-1 indicates the sump status and model of data logger utilized in each extended sump.

To support monitoring on a quarterly basis, the inspector shall verify that the data logger is secure and operates properly. Maintenance and calibration of the data loggers shall be performed in accordance with manufacturer's recommendations (appendix E-3). A damaged data logger, required for monitoring according to the PSVP, shall be recorded on the inspection checklist and repaired/replaced within 60 days and calibrated in accordance with manufacturer's requirements (Appendix E-3). During repair/replacement, hand measurements shall be taken to maintain the database and when the data logger is brought back on-line to verify the data logger measurement. Removal/re-installation of the sump lids shall be in accordance with the Sump Lid Removal/Reinstallation Procedure (Appendix C-2). Also, on an annual basis hand measurements shall be made in sumps where data loggers or other measurements indicate that the sump is dry to verify the data logger measurement.

A general inspection of the 83 sump extensions will be performed monthly during the geomembrane liner general inspection, and following severe weather. The inspector shall check for any tears, penetrations, or thin spots in the geomembrane liner at the extended sumps. This inspection shall also verify the integrity of the sump lid/data logger system and extended sump/geomembrane liner transition (geomembrane liner boots).

Any damaged areas on the geomembrane liner and/or sump extension shall be recorded on the inspection checklist (noting the location and size), and shall be repaired prior to the next monitoring event, if possible. Repairs of geomembrane liner and geomembrane liner boots along with liner testing shall be in accordance Geomembrane Liner Repair Procedure (Appendix C-1) meeting requirements specified in Specification 02270 with reference to Drawing AB-14. The sump lid/data loggers system and sump extension shall be evaluated and repaired to meet requirements in Specification 02094 – Sump Extensions with reference to Drawing AB-12 through Drawing AB-14. The removal/reinstallation of the sump lid and data logger shall be in accordance with the Sump Lid Removal/Reinstallation Procedure in Appendix C-2.

3.2 Headwalls

The headwalls along the northern and eastern areas of the IRP Cap serve as structures retaining soil behind the structure, stormwater flow inlets and outlets to the reinforced concrete piping, and a structure to batten the geomembrane liner to prevent stormwater infiltration beneath the IRP Cap. Headwall maintenance includes the four headwalls and associated items along the North Channel and NE Corner piping, geomembrane liner batten, and liquid collection system providing access to collect accumulated liquids beneath the geomembrane liner. Headwalls are located around MFDS as shown on Drawing AB-4 through Drawing AB-8.

3.2.1 Headwall Structure

A general inspection will be performed twice-a-month and following severe weather to verify the opening is free of obstructions (brush or debris) and check for ballooning of geomembrane liner at the battens. On an annual basis the inspector shall verify that the construction joints are maintained and inspect the battens for seepage points. Also, annually the inspector shall verify the integrity of the trash grate and restricting plate at the upstream headwall of the NE Corner piping. The inspector shall also identify cracking greater than 1/16-inch and areas with surface spalling that may compromise the integrity of the concrete structure.

The areas with cracks greater than 1/16-inch, surface spalling, and damaged construction joints shall be recorded on the inspection checklist and evaluated to determine if the integrity of the area identified compromises the design intent of the headwall. Damages compromising the design intent shall be repaired within 30 days in accordance with the Concrete Repair Procedure (Appendix C-3) to meet requirements in Specification 03300 – Concrete with reference to Drawing AB-32 through Drawing AB-34. Maintenance to the trash grate and restricting plate at the upstream headwall shall be such to maintain a proper seal as detailed in Drawing AB-34 and allow flow into the NE Corner pipe system.

Obstructions in the headwalls shall be removed within 24 hours or as necessary to prevent flow obstructions. Ballooning geomembrane liner located adjacent to the headwalls shall be pumped within 24 hours or as necessary to prevent a health and safety concern or potential liner damage. The collected liquid shall be pumped via the liquid collection sump (Section 3.2.3) in accordance with the Commonwealth procedures with reference to Section 7.7 – MFDS Liquids.

3.2.2 Headwall Battens

Inspections will be performed twice-a-month, following severe weather or upon ballooning of geomembrane liner or identification of soggy areas. An inspection performed as a result of one of these conditions will count as a general inspection for one of the twice-a-month inspections. The inspector shall verify that the geomembrane liner at the batten bar strip is free of tears,

penetrations, or thin spots. On a semi-annual basis, the inspector shall verify that the geomembrane liner and gasket material are securely anchored to the headwall with the batten bar strip. Items in need of repair shall be recorded on the inspection checklist and shall be repaired within 48 hours. Repair of liner material along battens shall be in accordance with the Geomembrane Liner Procedure (Appendix C-1) with reference to Specification 02270 and Drawing AB-32 through Drawing AB-34.

3.2.3 Collection Sump at the Headwalls

In the course of inspections at the four headwalls, the Commonwealth shall pump any liquids that accumulate beneath the liner at "Headwall A" and the upstream headwall of the NE Corner piping through the collection system. The accumulated liquids shall be sampled for radioactive contaminants and processed in accordance with Section 7.7.1. Signs of accumulated liquids during O&M inspections shall be documented in Appendix B. Inspections will be performed twice-a-month along with the headwall structure and headwall batten inspections to detect any tears, penetrations, or thin spots in the geomembrane liner along the sump piping and at the connection with the sump and to verify the integrity of the sump lid. On an annual basis, the inspector shall verify the connection with the geomembrane liner (geomembrane liner boot).

Any damages to the geomembrane liner or sump lid shall be recorded on the inspection checklist (noting the location and size), and shall be repaired within 48 hours. Repairs of geomembrane liner and with liner testing shall be in accordance with Geomembrane Liner Repair Procedure (Appendix C-1) meeting requirements specified in Specification 02270 with reference to Drawing AB-35.

3.3 Subsidence

Permanent site control monuments and control points (subsidence monitors) are located around MFDS for monitoring settlement of IRP Cap areas and evaluation of trench stabilization as detailed in the PSVP, Section 2.2 - IRP Cap Subsidence Monitoring.

3.3.1 Permanent Site Control Monuments

An inspection will be performed annually to verify that the coordinates are clearly marked (Table 3-2), monuments are structurally sound, concrete pads and steel casings are free of surface damages, and the brass plates are securely grouted.

Dislodged monuments and surface damages compromising the use of the permanent monuments as a benchmark during a topographic survey (Section 3.3.3) shall be recorded on the inspection checklist and repaired prior to next annual monitoring event or as soon as practical. Repairs shall be in accordance with the Concrete Repair Procedure (Appendix C.3) to meet requirements

in Specification 03300 with reference to Drawing AB-4 and Drawing AB-44. Upon completion of repairs, a registered surveyor shall perform a survey if prior damage or repair dislodged the monument.

3.3.2 Control Points

Control points are located at 28 points on the geomembrane liner as an aid in monitoring subsidence along the IRP Cap (Figure 3-2). An inspection will be performed annually to verify that the control points (painted marking) are clearly marked on the geomembrane liner in accordance with the control point coordinates (Table 3-3).

Control points shall be marked annually with bright colored construction paint and recorded on the inspection checklist. However, if fading of control points is identified during the monthly site walks of the geomembrane liner, the points shall be maintained with bright colored construction paint.

3.3.3 Subsidence Monitoring

The Commonwealth shall monitor subsidence areas via monthly site walks and annual topographic surveys pursuant to the PSVP, Section 2.2 – IRP Cap Subsidence Monitoring. The Commonwealth shall document all subsidence monument surveys and subsidence repairs performed on the subsidence tracking form (Appendix C-4) which includes subsidence locations and fill quantities. The data is a critical component in establishing and achieving the trench stabilization criteria at MFDS and assessing the need for a leachate management engineering evaluation as detailed in the PSVP Section 2.3.1 – Data Collection and Evaluation.

A general inspection or site walk shall be performed monthly to monitor storm water ponding over the IRP Cap. Visual inspections shall specifically include areas in which water collects and does not drain in order to track potential subsidence areas. Annually, MFDS shall be field surveyed (topographic) to evaluate surface subsidence.

Subsided areas shall be physically marked on the liner, documented on the inspection checklist, and recorded on the tracking form in Appendix C-4 (noting the location and size). The subsided areas shall be monitored noting whether or not the subsided area gets larger and/or deeper. The maximum allowable accumulated water depth is 3 inches with maximum allowable area approximately 315 square feet or a radius of 10 global feet. Accumulated water shall be removed from the subsidence area within 24 hours or as necessary to prevent a health and safety concern or potential liner damage. When the maximum allowable water depth is exceeded, the area shall be roped off and water shall be removed in accordance with the Commonwealth procedures with reference to Section 7.7 – MFDS Liquids. Repairs shall be made within 60 days,

or as necessary, to maintain IRP Cap elevations and to minimize liner fatigue, health and safety concerns, and potential infiltration of water. Any additional accumulated water shall be removed from liner to prevent further damage and the quantities of the required fill material shall be recorded on the applicable form in Appendix C-4. The repaired area shall be marked and documented in the annual topographic survey. Subsidence repairs shall be in accordance with Appendix C-4 to meet the requirements in Specification 02300 – Earthwork with reference to Drawing AB-4 through Drawing AB-8.

3.4 Drainage Channels, Diversion Berms, and Anchor Trenches

Interior and perimeter drainage channels, diversion berms, and anchor trenches are located around MFDS and within the IRP Cap area in accordance with Drawing AB-4 through Drawing AB-8.

3.4.1 Drainage Channels

A general inspection will be performed twice-a-month and immediately following severe weather for the interior and perimeter drainage channels which includes the North Channel emergency spillway within the IRP Cap. The inspector shall check for any tears, penetrations, or thin spots in the geomembrane liner, check for soft spots or wet areas during the coarse of inspection, and verify that the geotextile fabric is free of damages if exposed through a torn geomembrane liner. Also, the inspector shall verify that leaves and any other debris are not impeding flow along the drainage channels. Annually, the inspector shall walk the liner field seams, perform an Airlance Test (ASTM D 4337-84) on the exposed and accessible field seams and visually examine the factory seams to ensure that they have not been damaged.

Any damaged areas shall be marked on the geomembrane liner and recorded on the inspection checklist (noting the location and size). The wedge-welded or extruded liner seams with penetrations, soft spots or wet areas shall be tested with the applicable air-lance test or v-box, respectively. The damaged areas shall be repaired within 4 working days or prior to the next forecasted rain event, whichever is sooner. If a damaged liner area is discovered during inclement weather, it shall be repaired as soon as weather permits. Accumulated leaves or debris along the channels shall be removed within 14 days or as needed to avoid obstruction of channel flow. Repairs to the geomembrane liner shall be in accordance with the Geomembrane Liner Repair Procedure (Appendix C-1) to meet requirements in Specification 02270 with reference to Drawing AB-5 through Drawing AB-8 and Drawing AB-17. Also, if geotextile the fabric is damaged, repairs shall meet requirements in Specification 02275 – Geotextile and Composite Drainage Net.

3.4.2 Diversion Berms

A general inspection will be performed twice-a-month and following severe weather along the interior diversion berms. The inspector shall check for any tears, penetrations, or thin spots in the geomembrane liner, check for soft spots or wet areas during the coarse of inspection, and verify integrity of geotextile materials, if exposed through the geomembrane liner. Annually, the inspector shall walk the liner field seams, perform an Airlance Test (ASTM D4337-84) on the exposed and accessible field seams and visually examine the factory seams to ensure that they have not been damaged.

Any damaged areas shall be marked on the geomembrane liner and recorded on the inspection checklist (noting the location and size). The wedge-welded or extruded liner seams with penetrations, soft spots or wet areas shall be tested with the applicable the air-lance test or v-box, respectively. The damaged areas shall be shall be repaired within 4 working days or prior to the next forecasted rain event, whichever is sooner. Repairs of the geomembrane liner shall be in accordance with the Geomembrane Liner Repair Procedure (Appendix C-1) to meet requirements specified in Specification 02270 with reference to Drawing AB-5 through Drawing AB-8 and Drawing AB-18. Also, if the geotextile fabric is damaged, repairs shall meet the requirements in Specification 02275.

3.4.3 Anchor Trenches

A general inspection will be performed monthly and following severe weather along the anchor trenches as identified on Drawing AB-4 through Drawing AB-8. The inspector shall check for any tears, penetrations, or thin spots in the geomembrane liner, check for soft spots or wet areas during the coarse of inspection, and verify the integrity of geotextile materials, if exposed through the geomembrane liner. Annually, the inspector shall walk the liner field seams, perform an Airlance Test (ASTM D4337-84) on the exposed and accessible field seams, and visually examine the factory seams to ensure that they have not been damaged.

Any damaged areas shall be marked on the geomembrane liner and recorded on the inspection checklist (noting the location and size). The wedge-welded or extruded liner seams with penetrations, soft spots or wet areas shall be tested with the applicable air-lance test or v-box, respectively. The damaged areas shall be repaired within 4 working days or prior to the next forecasted rain event, whichever is sooner. If a damaged liner area is discovered during inclement weather, it shall be repaired as soon as weather permits. Repairs to the geomembrane liner along the anchor trenches shall be in accordance with the Geomembrane Liner Repair Procedure (Appendix C-1) meeting requirements in Specification 02270 with reference to Drawing AB-4 through Drawing AB-8, Drawing AB-17, and Drawing AB-18. Also, if the

geotextile fabric is damaged, repairs shall meet requirements in Specification 02275 with reference to Drawing AB-18.

3.5 Articulating Concrete Block System

The AB-mat systems protect the geomembrane liner and serve as energy dissipaters along the IRP Cap. The AB-mat systems comprise of individual concrete blocks connected with stainless steel cables forming 8-feet by 16-feet mats which are connected to adjacent mats with steel clamps. Geomembrane liner flaps and cementitious fill material are located in specific areas to minimize stormwater infiltration beneath the AB mat systems. Anchored stainless steel cables, dead-man structures, and cementitious fill material are located in specific areas along the AB mat systems to minimize lateral movement of the AB-mat systems. See Drawing AB-5 through Drawing AB-8, Drawing AB-17 and Drawing AB-18 for the AB mat details along the IRP Cap.

3.5.1 Articulating Concrete Block Mats

A general inspection will be performed monthly along the interior Y-channel and the North, Southeast, and East channels. The inspector shall inspect for broken concrete blocks, visually verify integrity of the geomembrane liner adjacent to the AB-mats (check for tears, penetrations, or thin spots in accordance with Section 3.1.1), and verify that vegetative growth (weeds and woody vegetation) is not impeding flow along the AB-mat systems. Pursuant to manufacturer's recommendations, the inspector shall verify that a minimum of 3 clamps are in-place along the long side (16-feet) and 1 clap on the short side (8-feet) connecting the adjacent AB-mats. Note, Actual installation involved approximately twice as many clamps as the manufacturer's recommendations additional clamps may be required to minimize lateral movement of the AB-mats. On a semi-annual basis, the inspector shall check the area adjacent to the Southeast channel for deterioration of the geomembrane liner beneath the stainless steel anchors (tears, penetrations, or thin spots) and inspect for deterioration of the plastic tubing (worn areas, cracking, or penetrations) which could cause potential liner damage. Also at the upstream portions of the North and East channels, the inspector shall check that the anchored stainless steel cables in the upstream headwalls are intact so that the stainless steel cable minimize lateral movement of the AB-mats.

Repair to individual AB mat blocks, replacement of missing or damaged clamps, and repairs to the anchorage shall be recorded on the inspection checklist. Repairs shall be within 14 days or as necessary to minimize lateral movement due to storm water flow and to prevent potential damage to the underlying liner materials. Since the AB-mats required approximately twice as many clamps as the manufacturer's recommendations, the replacement of clamps shall be as required to minimize lateral movement and may require installation of additional clamps.

Repairs to the AB-mat shall meet the manufacturer's requirements (Appendix E-4) with reference to Specification 02420 – Storm Water, Erosion and Sediment Control and Drawing AB-5 through Drawing AB-8, Drawing AB-17, and Drawing AB-18. Upon identification of loose encased stainless steel anchors, damaged plastic tubing, or anchors not securely anchored into the underlying soil along the southern edge of the Southeast channel, the stainless steel cables and plastic tubing shall be repaired/replaced to the original condition to minimize potential liner damage and lateral movement. Weeds and woody vegetation (greater than 1-inch in diameter) shall be eliminated to minimize damage to the underlying geosynthetics and to prevent reduction of stormwater flow capacity along the AB-mats.

3.5.2 Cementitious Fill Material

Portions of the interior Y-channel, North channel, and Southeast channel, have cementitious fill material to stiffen-up the AB-mat system by minimizing the lateral movement and minimize the hydrostatic pressures beneath the AB-mats.

A general inspection will be performed monthly along the central portion interior Y-channel, the upstream headwall of the North channel, and at the inlet to the Southeast channel between the AB-mat system and the dead-man structure (Section 3.5.4.2). The inspector shall inspect and note concrete spalling or void spaces allowing water to pool between individual AB-mat blocks and erosion of adjacent cementitious fill material. Cementitious fill material is also placed at the North and South inlets of the interior Y-channel inlets between the AB-mat system and the dead-man structures, however the dead-man structures are covered with a geomembrane liner flap (see Section 3.5.4.1 for inspection items).

Areas with concrete spalling or void spaces along the cementitious fill material placement shall be recorded on the inspection checklist and repaired within 14 days or as necessary to minimize erosion of cementious fill material, hydrostatic pressures beneath the AB-mats, and lateral movement of the AB-mats. Minor repairs of the cementitious fill material within the AB Mats (quantity of approximately 2 cubic feet, dependent upon the manufacturer's recommendation) can be made with a permanent concrete repair material that is a high early strength, low shrinkage material. Requirements of the repair material include the following:

- Compressive Strength, ASTM C109 — Minimum 4,000 pounds per square inch (psi) at 28 days
- Bond Strength, ASTM C 882 — Minimum 2,000 psi at 28 days
- Drying Shrinkage, ASTM C157 — 0.06% or less

Application of the repair material shall be performed in accordance with manufacturer's recommendations. Care should be taken to allow adequate cure time prior to subjecting repair to stormwater flows. Alternate permanent concrete repair material may be evaluated to meet the performance criteria to adequately fill in any void spaces of the existing cementitious fill that minimizes additional erosion of the fill, hydrostatic pressures beneath the AB-mats or lateral movement of the AB-mats.

Replacement of larger areas of the cementitious fill material must be evaluated with respect to manufacturer's recommendations on material use. The replacement material shall minimize stormwater infiltration and provide additional ballast for the AB-mat system as detailed on Drawing AB-6 through AB-8, and Drawing AB-17. The replacement material shall also meet a minimum 28-day strength requirement of 3,000 psi and 4 to 7 percent air content, with reference to Appendix H-1 and H-2.

3.5.3 Geomembrane Liner Flaps

Geomembrane liner flaps are located at the North and South inlets of the interior Y-channel covering the dead-man structures and along the interior Y-channel at diversion berm 6 as detailed on Drawing AB-7. The geomembrane liner flaps provides a transition for stormwater to flow from the geomembrane liner to the inlet of the interior Y-channel structure.

A general inspection will be performed twice-a-month and following severe weather to verify the integrity of the geomembrane liner flap. The inspector shall check for any tears, penetrations, or thin spots in the geomembrane liner flaps and visually inspect the connection of the flap to the AB mat as detailed on Drawing AB-18. Annually, the inspector shall test the geomembrane liner flap connection with the adjacent geomembrane liner (extruded liner seams) via the v-box to ensure a seal with the IRP Cap geomembrane liner.

Any damaged areas or liner seams shall be marked on the geomembrane liner flaps, recorded on the inspection checklist (noting the location and size), and repaired within 4 working days or prior to the next forecasted rain event, which ever is sooner. Repairs of geomembrane liner shall be in accordance with the Geomembrane Liner Repair Procedure (Appendix C-1) to meet requirements specified in Specification 02270 with reference to Drawing AB-7 and Drawing AB-18. Any accumulated water shall be removed within 24 hours or as necessary to prevent a health and safety concern or potential liner damage in accordance with the Commonwealth procedures with reference to Section 7.7 – MFDS Liquids.

3.5.4 Dead-Man Structures

Dead-man structures located at the South and North inlet of the interior Y-channel and the inlet of the Southeast perimeter channel The dead-mans at the South and North inlet of the interior Y-channel are covered by geomembrane liner flaps as detailed on Drawing AB-18.

3.5.4.1 Dead-Man Structures at Interior Y-channel Inlet

Dead-man structures at the South and North inlet of the interior Y-channel anchor the upstream portion of the AB-mat system at the channel inlet and the geomembrane liner is battened to the structures to prevent stormwater infiltration. The concrete structures are covered with geomembrane liner and shall be inspected as detailed in Section 3.5.3. Upon visual inspection and identification of physical damage (tears, penetrations, or thin spots), the geomembrane liner flap will be opened to inspect the integrity of the dead-man structures.

The inspector shall verify that the IRP Cap geomembrane liner battened to the dead-man structure is free of tears, penetrations, and thin spots and verify that the geomembrane liner and gasket material are securely anchored to the dead-man structure with the batten bar strip. Along the cementitious fill material adjacent to the dead-man structures, the inspector shall check for void spaces allowing water to pool and erosion of adjacent cementitious fill material. Also, the inspector shall verify that the construction joints are maintained, identify cracking greater than 1/16-inch, and identify areas with surface spalling that may compromise the integrity of the concrete structure.

The areas with cracks greater than 1/16-inch, surface spalling, and damaged construction joints shall be recorded on the inspection checklist and evaluated to determine if the integrity of the area identified compromises the design intent of the dead-man structure. Damages compromising the design intent shall be repaired within 30 days in accordance with the Concrete Repair Procedure (Appendix C-3) to meet requirements in Specification 03300 – Concrete with reference to Drawing AB-7 and Drawing AB-18.

Damaged battens and geomembrane liner shall be recorded on the inspection checklist and repaired within 48 hours. Repair of liner material along the battens shall meet the geomembrane liner requirements in Specification 02270 with reference to Drawing AB-18. Any accumulated liquid shall be removed within 24 hours or as necessary to prevent a health and safety concern or potential liner damage in accordance with the Commonwealth procedures with reference to Section 7.7 – MFDS Liquids. Areas with void spaces along the cementitious fill material placement shall be recorded on the inspection checklist and repaired in accordance with Section 3.5.3 to minimize erosion of cementious fill material, hydrostatic pressures beneath the AB-mats, and lateral movement of the AB-mats.

Following the inspection of the dead-man structures and applicable repairs, the geomembrane flaps shall be re-welded to the IRP Cap geomembrane liner in accordance with the Geomembrane Liner Repair Procedure (Appendix C-1) to meet requirements specified in Specification 02270 with reference to Drawing AB-7 and Drawing AB-18.

3.5.4.2 Dead-Man Structure at Southeast Perimeter Channel Inlet

The dead-man structure at the Southeast perimeter channel inlet anchors the upstream portion of the AB-mat system at the channel inlet and the geomembrane liner is battened to the structure to prevent stormwater infiltration.

A general inspection will be performed twice-a-month and following severe weather. The inspector shall verify that the geomembrane liner is free of tears, penetrations, and thin spots. On a semi-annual basis, the inspector shall verify that the geomembrane liner and gasket material are securely anchored to the dead-man structure with the batten bar strip. On an annual basis, the inspector shall verify that the construction joints are maintained, identify cracking greater than 1/16-inch, and identify areas with surface spalling that may compromise the integrity of the concrete structure.

The areas with cracks greater than 1/16-inch, surface spalling, and damaged construction joints shall be recorded on the inspection checklist and evaluated to determine if the integrity of the area identified compromises the design intent of the dead-man structure. Damages compromising the design intent shall be repaired within 30 days in accordance with the Concrete Repair Procedure (Appendix C-3) to meet requirements in Specification 03300 – Concrete with reference to Drawing AB-7 and Drawing AB-18.

Damaged battens and geomembrane liner shall be recorded on the inspection checklist and repaired within 48 hours. Repair of liner material along the battens shall be in accordance with the Geomembrane Liner Repair Procedure (Appendix C-1) to meet requirements specified in Specification 02270 with reference to Drawing AB-18. Any accumulated liquid shall be removed within 24 hours or as necessary to prevent a health and safety concern or potential liner damage in accordance with the Commonwealth procedures with reference to Section 7.7 – MFDS Liquids.

3.6 Northeast Corner Piping

The storm water drainage outlet, NE Corner Piping, connects the North Channel and East Perimeter Channel as identified on Drawing AB-4, Drawing AB-6, and Drawing AB-8

A general inspection will be performed monthly and following severe weather at the two manholes and along the piping. The inspector shall verify the integrity of the headwalls (Section 3.2) to ensure that culverts are free of debris or obstructions, and check that the manhole covers are securely attached and flush with the ground surface. Annually, the inspector shall perform interior inspections of the precast concrete manholes and culvert piping to verify that the structure is free of debris or obstructions and that the manhole steps are securely anchored in the concrete walls.

If pipe collapse or failure is suspected, the inspector shall provide a means for interior inspection of the length of piping. The interior piping shall be inspected for cave-ins, debris or obstructions, and check for roundness of pipe along the length of pipe.

Any surface damages to the pre-cast concrete manholes shall be recorded on the inspection checklist and repaired within 30 days. Damaged construction joints and surface damages in headwalls along with damaged headwall battens shall be evaluated, repaired, and maintained in accordance with Section 3.2 – Headwalls to meet the requirements in Specification 02270 and Specification 03300 with reference to Drawing AB-8, Drawing AB-32, and Drawing AB-33.

3.7 Former Leachate Storage Facility Area

The former leachate storage facility (LSF) area consists of 4 - 20,000 gallon tanks with riser pipes which extend through the geomembrane liner as detailed on Drawing AB-4, Drawing AB-6, and Drawing AB-41. Tanks 2, 3, and 4 are closed-out with the tank access and vent risers completely grouted. Storage capacity remains in Tank 1 for future non-liquid waste disposal (e.g., solidified liquids and dry active waste) by the Commonwealth.

3.7.1 Former Leachate Storage Facility Tank Extensions

The tank access and vent risers are located south of the North Channel as detailed on Drawing AB-4 and Drawing AB-6. A vehicular traffic exclusion zone is established for the area to minimize potential load damage to the tanks, as shown on Drawing AB-41. Within the exclusion zone, small rubber tired equipment (e.g., John Deere Gator or 4-wheeler) with a maximum gross vehicular weight of 2,600 pounds (based on 3-axle equipment) may enter the exclusion zone. However, the vehicle shall not be parked or driven over the tank used for disposal until the tank has been filled with grout.

A general inspection shall be performed monthly and following severe weather to inspect for any tears, penetrations, or thin spots in the geomembrane liner at the riser extensions. Also, the inspector shall note any condition in the geomembrane liner boot extension which may indicate maintenance items including, but not limited to, liner fatigue, accumulated water, and settlement

in that area. Annually, the inspector shall verify that the liner boots are securely attached to the extended risers and geomembrane liner and note any signs of deterioration (tears, penetrations, or thin spots) of the liner boot compromising the seal at the riser extension. Opening of the Tank 1 access and vent risers, will be done in accordance with the Commonwealth procedures to ensure the health and safety of the environment and of personnel. If the gasket material is contaminated, it shall be replaced prior to securing the access and vent riser blind flange.

Accumulated water shall be removed within 24 hours or as necessary to prevent a health and safety concern or potential liner damage. Damaged areas shall be marked on geomembrane liner, recorded on the inspection checklist (noting the location and size), and repaired within 4 working days or prior to the next forecasted rain event, whichever is sooner. If a damaged liner area is discovered during inclement weather, it shall be repaired as soon as weather permits. Repairs to the connection of the geomembrane liner with the geomembrane liner boots and testing shall be in accordance with Geomembrane Liner Repair procedure (Appendix C-1) to meet requirements in Specification 02270 with reference to Drawing AB-41.

Areas adjacent to the extended risers with suspected settlement at the riser extensions shall be recorded on the inspection checklist and the subsided area backfilled, as required, to minimize liner fatigue, health and safety concerns, and potential water infiltration. The stainless steel bands shall be readjusted, as necessary, to provide a proper seal and minimize liner fatigue at the riser extension. If settlement continues at the next inspection, the area shall be filled with back fill material and repaired within 60 days, or as necessary, to maintain IRP Cap elevations and to minimize liner fatigue, health and safety concerns, and potential infiltration of water. Repairs shall be in accordance the Subsidence Repair Procedure (Appendix C-4) and the quantities of fill shall be recorded on the applicable form in Appendix C-4.

3.7.2 Former Leachate Storage Facility Tank Cathodic Protection

As detailed on Drawing AB-9 and Drawing AB-41, Tank 1 and Tanks 2 are cathodically protected. The Cathodic Protection Post Installation Survey provided by Allied Corrosion Industries, Inc for Tank 1 and Tanks 2 is in Appendix E-5.

On a monthly basis, the inspector shall record the rectifier direct current (DC) volts and amps output on the inspection form. Annually, a survey shall be performed by a National Association of Corrosion Engineers (NACE) certified technician and any adjustment to the individual anode string resistors or rectifier outputs shall be made at the time on the annual survey. The annual survey shall be in accordance with the procedure detailed on page 6 of the manufacturer's O&M instructions (Appendix E-5). If at any time the monthly rectifier readings indicate a 20 percent or greater decrease in current since the last annual survey, a corrosion control specialist or

engineer shall be notified to receive instructions/recommendations regarding a rectifier and/or resistor adjustment. See Appendix E-5 for the initial results upon installation of the cathodic protection.

The manufacturer's O&M instructions (Appendix E-5) addresses the specifications, operation instructions, adjustment, calibrating, troubleshooting, and recommended spare parts for the rectifier and junction box. In addition, optional accessories providing additional surge protection for both the alternating current (AC) input and DC output are recommended if the rectifier box becomes subject to damaging power surges. See Appendix D for the recommended spare parts.

4.0 East Detention Basin

Items requiring monitoring and maintenance on a regular basis at the EDB include the principal and emergency spillways, earthen embankment, and basin area as detailed on Drawing AB-4 and Drawing AB-7. General and comprehensive inspections shall be performed according to Appendix A-2 using the applicable inspection forms/documentation in Appendices B and C.

4.1 Principal Spillway

The principal spillway consists of barrel piping through the embankment, riser pipe, H-flume, ultrasonic flow recorder and rain gauge, and riprap at the outlet supporting instantaneous and continuous flow data collection from the ultrasonic flow recorder as detailed in the PSVP, Section 2.4 – EDB Discharge Flow Monitoring in accordance with Drawing AB-19.

4.1.1 Riser Pipe

A general inspection will be performed twice-a-month and following severe weather to verify that the riser pipe's orifices are free of obstructions to ensure that the riser pipe is intact, serving as an inlet, and providing full flow capacity to the H-flume through the barrel piping. Annually, the inspector shall verify the riser pipe is secure and attached to the foundation to ensure that the riser pipe structurally intact.

The riser pipe shall be repaired within 14 days following notice of any damage. However, obstructions in the riser pipe shall be removed prior to the next forecasted rain event or within 24 hours to maintain integrity of the principal spillway. Riser pipe and concrete foundation shall be maintained to meet requirements in Specification 02725 – Principal Spillway Flow Measurement Pipe with reference to manufacturer's cut-sheets (Appendix E-6) and Drawing AB-19 and Drawing AB-20.

4.1.2 H-flume

A general inspection will be performed twice-a-month and following severe weather to verify that the H-flume is free of any obstructions, silt, or sediment. The purpose of this maintenance is to ensure correct flow measurements from the ultrasonic flow recorder. Annually, the inspector shall verify that the construction joints are maintained, and identify cracking greater than 1/16-inch and areas of surface spalling that may compromise the integrity of the concrete portion of the H-flume.

The H-flume shall be maintained in accordance with Drawing AB-19 through Drawing AB-21. The concrete portion of the H-flume with cracks greater than 1/16-inch, surface spalling, and

damaged construction joints shall be recorded on the inspection checklist and evaluated to determine if the integrity of the area identified compromises the design intent. Damages compromising the design intent shall be repaired within 30 days in accordance with the Concrete Repair Procedure (Appendix C-3) to meet requirements in Specification 03300 with reference to Drawing AB-19, Drawing AB-20, and Drawing AB-22.

Damages to the fiberglass portion shall be maintained in accordance with Drawing AB-19 through Drawing AB-21 with reference to Specification 02725 and the manufacturer cut-sheets (Appendix E-7). To prevent the flow obstruction, obstructions and silt or sediment shall be removed within 24 hours or as necessary in accordance with the Commonwealth procedures.

4.1.3 Ultrasonic Flow Recorder and Rain Gauge

A general inspection will be performed weekly to verify that rain gauge (ISCO Rain Gauge, Model 674) is not plugged or has not accumulated dust which may affect the accuracy of the measurements and flow data at the H-flume. Also, a general inspection will be performed monthly and following severe weather to verify that the ultrasonic flow recorder's (ISCO Ultrasonic, Model 4210) flow/level measurements compare with the staff gauge measurement. The ultrasonic flow recorder and rain gauge shall be calibrated as needed. Annually, the inspector shall verify that the ultrasonic flow recorder and rain gauge are structurally sound.

Any damage to the ultrasonic flow recorder and rain gauge shall be recorded on the inspection checklist and repaired/replaced within 60 days. If repair cannot be made, the Commonwealth shall notify EPA of a projected schedule and provide a means for repair. If accumulated dust is plugging the rain gauge, the rain gauge housing and outlet end of the funnel shall be cleaned with a cotton swab. Following repair, the ultrasonic flow recorder and rain gauge shall be maintained and calibrated using current ISCO software within 24 hours to meet requirements in Specification 02725 with reference to manufacturer's requirements (Appendix E-8) and Drawing AB-9 and Drawing AB-19 through Drawing AB-21.

4.1.4 Riprap

A general inspection will be performed monthly and following severe weather to verify the integrity of the riprap along the principal spillway outlet, inspect for debris and silt or sediment, and if exposed, verify that the geotextile fabric is not damaged. Annually, the inspector shall verify a minimum 1-foot riprap depth and inspect for brush growth. The riprap depth shall be measured by placement of a flat surface (e.g., 2 feet by 2 feet) on top of the surface of the riprap. A measuring rod shall then be placed adjacent to the flat surface to measure to the ground elevation. The distance shall be measured from the bottom of flat surface to the ground elevation. Riprap measurements shall be taken at representative locations.

Any damage shall be recorded on the inspection checklist and repaired within 30 days. Brush and debris shall be removed from the riprap area within 14 days in accordance with the Commonwealth procedures. No more than 3 inches silt or sediment on top of the riprap shall accumulate along the in an area at any time and shall be removed within 30 days to maintain drainage along the principal spillway. Riprap shall be evaluated and maintained to meet requirements in Specification 02271 – Riprap and Specification 02420 with reference to Drawing AB-19 and Drawing AB-20. Also, if exposed geotextile fabric is damaged, repairs shall be in accordance with Specification 02275. Weeds and woody vegetation (greater than 1-inch in diameter) shall be eliminated to minimize damage to under lying geosynthetics or prevent reduction of stormwater flow capacity along the principal spillway.

4.2 Emergency Spillway

The emergency spillway consists of a concrete pad on the earthen embankment (Section 4.3) and a Gabion basket system located in the eastern portion of MFDS in accordance with Drawing AB-19.

4.2.1 Concrete Pad

The concrete pad serves as the stormwater flow inlet to the emergency spillway from the EDB with a set ground elevation across the base of the spillway. Also, the concrete pad side-slopes transition from the perimeter road allowing a point for vehicular traffic to cross the emergency spillway (Drawing AB-19 and Drawing AB-20).

A general inspection will be performed twice-a-month to inspect for debris or obstructions. Annually, the inspector shall verify the integrity of the construction joints and identify cracking greater than 1/16-inch and areas with surface spalling that may compromise the integrity of the concrete pad.

The areas with cracks greater than 1/16-inch, surface spalling, and damaged construction joints shall be recorded on the inspection checklist and evaluated to determine if the integrity of the area identified compromises the design intent of the headwall. Damages compromising the design intent shall be repaired within 30 days. If the damages are so significant that a storm event utilizing the emergency spillway would jeopardize the integrity of the EDB embankment, the emergency spillway should be repaired as soon as possible and documented on the applicable inspection form in Appendix B. Concrete repair shall be in accordance with the Concrete Repair Procedure (Appendix C-3) to meet requirements in Specification 03300 with reference to Drawing AB-19 and Drawing AB-20. Debris or obstructions shall be removed within 24 hours in accordance with the Commonwealth procedures.

4.2.2 Gabion Basket System

A general inspection will be performed monthly and following severe weather to inspect for debris and verify the integrity of the Gabion basket system along the emergency spillway. Annually, the inspector shall inspect for brush growth and rusting on the Gabion baskets which may adversely affect performance in reducing velocities along the emergency spillway.

The Commonwealth may utilize a spray rust-preventive product, as needed, to maintain the integrity of the Gabion basket system and the application shall be noted on the inspection checklist. Gabion baskets shall be evaluated and maintained to meet requirements in Specification 02420 with reference to manufacturer's data (Appendix E-9) and Drawing AB-19. Brush and debris shall be removed within 14 days in accordance with the Commonwealth procedures. Weed control and woody vegetation (greater than 1-inch in diameter) shall be eliminated to minimize damage to underlying geosynthetics or prevent reduction of stormwater flow capacity along the principal spillway.

4.3 Earthen Embankment

A general inspection will be performed twice-a-month and following severe weather to check for erosion gullies, debris along the side-slopes, and eroded areas along the earthen embankment upstream of the H-flume as detailed on AB-19. Annually, the inspector shall verify that the side-slopes are maintained and free of brush growth.

Maintenance items shall be recorded on the inspection checklist and repaired within 7 days. Any items in need of repair shall be recorded on the inspection checklist and addressed within 7 days. Areas requiring seeding shall be vegetated with a seed mixture appropriate for the area to minimize erosion and barren areas with reference to Specification 02935, Turf. The appropriate seed mix may be evaluated by the Commonwealth during the IMP O&M period. Brush and debris shall be removed within 14 days in accordance with the Commonwealth procedures. Also, the embankment shall be maintained and measures must be implemented to correct bare areas prior to the next forecasted rain event to ensure stability of the embankment (e.g., minimize erosion).

Maintaining vegetation along the earthen embankment will require routine maintenance including mowing vegetation (maximum height to be no greater than 24-inches or other height appropriate for utilized seed mix), weed control, and the addition of soil amendments, as necessary to maintain vegetative cover and minimize erosion.

4.4 East Detention Basin Area

The basin area consists of a transition liner flap at the perimeter of the EDB, concrete Y-channel outfall structure along with riprap a Gabion basket system within the EDB as detailed on Drawing AB-19. The transition liner flap along the perimeter of the inlet is covered by riprap and the maintenance associated with the riprap is addressed in the following section.

4.4.1 Riprap

A general inspection will be performed monthly and following severe weather to verify the integrity of the riprap along the side-slopes and basin floor, to inspect for debris and silt or sediment, and if exposed, verify that the geomembrane liner at the inlet and/or geotextile fabric is not damaged. Annually, the inspector shall verify a minimum 1-foot riprap depth and inspect for brush growth. The riprap depth shall be measured by placement of a flat surface (e.g., 2 feet by 2 feet) on top of the surface of riprap. A measuring rod shall then be placed adjacent to the flat surface to measure to the ground elevation. The distance shall be measured from the bottom of flat surface to the ground elevation. Riprap measurements shall be taken at representative locations in the basin.

Any damage shall be recorded on the inspection checklist and repaired within 30 days. Brush and debris shall be removed from the riprap area within 14 days in accordance with the Commonwealth procedures. No more than 3 inches of silt or sediment on top of riprap shall accumulate in an area at any time and shall be removed within 30 days to maintain drainage along the side-slopes and floor within the EDB. Riprap shall be evaluated and maintained to meet requirements in Specification 02271 and Specification 02420 with reference to Drawing AB-7, Drawing AB-19, and Drawing AB-20. If the geomembrane liner and/or the geotextile fabric are damaged, repairs shall be in accordance with Specification 02270 and Specification 02275. Weeds and woody vegetation (greater than 1-inch in diameter) shall be eliminated to minimize damage to underlying geosynthetics and to prevent reduction of stormwater flow capacity in the EDB.

4.4.2 Gabion Basket System

A general inspection will be performed monthly and following severe weather to inspect for debris and verify the integrity of the Gabion basket system along the side-slopes of the EDB. Annually, the inspector shall inspect for brush growth and rusting on the Gabion baskets, which may adversely affect performance in reducing velocities entering the EDB.

The Commonwealth may utilize a spray rust preventive product, as needed, to maintain the integrity of the Gabion basket system and the application shall be noted on the inspection checklist. Gabion baskets shall be evaluated and maintained to meet requirements in

Specification 02420 with reference to manufacturer's data (Appendix E-9) and Drawing AB-7 and Drawing AB-19. Brush and debris shall be removed within 14 days in accordance with the Commonwealth procedures. Weeds and woody vegetation (greater than 1-inch in diameter) shall be eliminated to minimize damage to underlying geosynthetics and to prevent reduction of stormwater flow capacity in the EDB.

4.4.3 Y-Channel Outfall

Downstream of the interior Y-channel AB-mat system, a concrete Y-channel outfall structure at the EDB inlet provides a concrete channel to prevent erosion along the EDB side-slope and to dissipate storm water velocities. The structure consists of a concrete channel (chute) and a stilling basin as shown on Drawing AB-7, Drawing AB-19 and Drawing AB-23. At the upstream end of the concrete channel, where the interior Y-channel slope transitions to the EDB inlet, a geomembrane liner flap ties the outlet of the interior Y-channel AB mat system and the concrete channel with a geomembrane liner batten.

4.4.3.1 Outfall Structure

The concrete channel with the geomembrane liner battened at the inlet prevents erosion of underlying soil materials along the EDB side-slope down-gradient of the interior Y-channel. At the toe of the concrete channel, a stilling basin with a series of chute blocks and baffle blocks further dissipate stormwater flow velocities from the IRP Cap entering the EDB.

A general inspection will be performed twice-a-month and following severe weather to verify that the concrete channel and stilling basin are free of obstructions (brush or debris). Also, the inspector shall verify that the 1-inch diameter weep holes, at the end of the stilling basin, are free of obstructions (brush or debris). Annually, the inspector shall verify that the construction joints are maintained and identify cracking greater than 1/16-inch and areas with surface spalling that may compromise the integrity of the concrete structure.

The areas with cracks greater than 1/16-inch, surface spalling, and damaged construction joints shall be recorded on the inspection checklist and evaluated to determine if the integrity of the area identified compromises the design intent of the headwall. Damages compromising the design intent shall be repaired within 30 day in accordance with Concrete Repair Procedure (Appendix C-3) and Drawing AB-23 through Drawing AB-25with reference to Appendix H-3 and Specification 03300 – Concrete. Obstructions along the channel and stilling basin shall be removed within 24 hours or as necessary to prevent flow obstructions.

4.4.3.2 Outfall Structure Geomembrane Liner Flap

The geomembrane liner is welded to the existing geomembrane liner beneath the interior Y-channel AB-mat system and is battened to the concrete channel inlet. The geomembrane liner flap prevents stormwater from flowing beneath the outfall structure.

A general inspection will be performed twice-a-month and following severe weather to verify the integrity of the geomembrane liner flap. The inspector shall check for any tears, penetrations, or thin spots in the geomembrane liner flaps and visually inspect connection of the flap to the concrete channel as detailed on Drawings AB-23 and AB-24. Annually, the inspector shall test the geomembrane liner flap connection with the adjacent geomembrane liner (extruded liner seams) via the v-box to ensure a seal with the IRP Cap geomembrane liner.

Any damaged areas or liner seams shall be marked on the geomembrane liner flaps, recorded on the inspection checklist (noting the location and size), and repaired within 4 working days or prior to the next forecasted rain event, which ever is sooner. Repairs of geomembrane liner shall be in accordance with the Geomembrane Liner Repair Procedure (Appendix C-1) to meet requirements specified in Specification 02270 with reference to Drawing AB-23 through Drawing AB-25. Any accumulated water shall be removed within 24 hours or as necessary to prevent a health and safety concern or potential liner damage in accordance with the Commonwealth procedures with reference to Section 7.7 – MFDS Liquids.

4.4.3.3 Outfall Structure Batten

Inspections will be performed twice-a-month in conjunction with the geomembrane liner flap inspection (Section 4.4.3.2). The inspector shall verify that the geomembrane liner at the batten bar strip is free of tears, penetrations, or thin spots. On a semi-annual basis, the inspector shall verify that the geomembrane liner and gasket material are securely anchored to the headwall with the batten bar strip.

Items in need of repair shall be recorded on the inspection checklist and shall be repaired within 48 hours. Repairs of geomembrane liner along the batten shall be in accordance with the Geomembrane Liner Repair Procedure (Appendix C-1) to meet requirements specified in Specification 02270 with reference to Drawing AB-23 though Drawing A-25.

5.0 Drainage Channels Outside the Initial Remedial Phase Cap

Drainage channels outside the IRP Cap area include the East Main Drainage Channel and the South Drain inlet area along the southern perimeter road as shown on Drawing AB-5 and Drawing AB-37. The inspections shall be performed according to Appendix A-2 with the applicable inspection forms/documentation in Appendix B.

5.1 East Main Drainage Channel

On a semi-annual basis (early spring and fall) and following severe weather the inspector shall inspect for fallen timber, brush or debris, and identify any erosion in accordance with Section 7.6 – Erosion Monitoring of Drainage Channels.

Upon documentation of fallen timber, debris, or brush along the East Main Drainage Channel, the inspector shall inspect for impeding water flow. If water is being diverted toward the side-slopes causing erosion along portions of the East Main Drainage Channel, the fallen timber, debris or brush shall be managed so that storm flow is not impeded. Maintenance shall be performed within 14 days in accordance with the Commonwealth procedures. However, if water is being impeded/dammed along the channel, the obstructions shall be removed within 24 hours, or as necessary, to prevent flow obstruction and the channel shall be maintained to meet requirements in Specification 02420 with reference to Drawing AB-37 and Drawing AB-38.

5.2 South Drain Inlet Area

The inlet area of the south drainage channel, perpendicular to the southern perimeter road, consists of two headwalls (up gradient and down gradient of the roadway), riprap, and a Gabion basket system as detailed on Drawing AB-5.

5.2.1 Headwalls

The headwalls retain soil underneath the perimeter road and serve as the stormwater flow inlet/outlet for the reinforced concrete piping.

A general inspection will be performed twice-a-month and following severe weather to verify that the opening or inverts are free of all obstructions. On an annual basis the inspector shall verify that the construction joints are maintained. The inspector shall also identify cracking greater than 1/16-inch and areas with surface spalling that may compromise the integrity of the concrete structure.

The areas with cracks greater than 1/16-inch, surface spalling, and damaged construction joints shall be recorded on the inspection checklist and evaluated to determine if the integrity of the area identified compromises the design intent of the headwall. Damages compromising the design intent shall be repaired within 30 days in accordance with the Concrete Repair Procedure (Appendix C-3) to meet requirements in Specification 03300 – Concrete with reference to Drawing AB-5. Obstructions in the headwalls shall be removed within 24 hours or as necessary to prevent flow obstructions.

5.2.2 Riprap

A general inspection will be performed monthly and following severe weather to verify the integrity of the riprap and to inspect for debris. Annually, the inspector shall verify a minimum 1-foot riprap depth and shall inspect for brush growth. The riprap depth shall be measured by placement of a flat surface (e.g., 2 feet by 2 feet) on top of the surface of the riprap. A measuring rod shall then be placed adjacent to the flat surface to measure to the ground elevation. The distance shall be measured from the bottom of flat surface to the ground elevation. Riprap measurements shall be taken at representative locations.

Any damage shall be recorded on the inspection checklist and repaired within 30 days. Brush and debris shall be removed from the riprap area within 14 days in accordance with the Commonwealth procedures. Riprap shall be evaluated and maintained to meet requirements in Specification 02271 and Specification 02420 with reference to Drawing AB-5. Weeds and woody vegetation (greater than 1-inch in diameter) shall be eliminated to minimize damage to underlying geosynthetics and to prevent reduction of stormwater flow capacity along the inlet area.

5.2.3 Gabion Baskets

A general inspection will be performed monthly and following severe weather to inspect for debris and verify the integrity of the Gabion basket system. Annually, the inspector shall inspect for brush growth and rusting on the Gabion baskets, which may adversely affect performance in reducing velocities exiting the channel.

The Commonwealth may utilize a spray preventative product, as needed, to maintain integrity of the system and shall be noted on the inspection checklist. Gabion baskets shall be evaluated and maintained to meet requirements in Specification 02420 with reference to manufacturer's data (Appendix E-9) and Drawing AB-5. Brush and debris shall be removed within 14 days in accordance with the Commonwealth procedures. Weed and woody vegetation (greater than 1-inch in diameter) shall be eliminated to minimize damage to underlying geosynthetics and to prevent reduction of stormwater flow capacity along the inlet area.

6.0 Southeast Cap

The Southeast Cap is comprised of a 60-mil high density polypropylene (HDPE) liner covered by 8-inches of sand with 1-foot 6-inches (minimum) of backfill and a vegetative cover (turf). Items requiring monitoring and maintenance on a regular basis at the Southeast Cap include the turf 60-mil HDPE liner (if exposed), riprap outlet, and tie-in with IRP Cap. The location of the Southeast Cap and associated elements are as shown on Drawing AB-4, Drawing AB-7, and Drawing AB-36. General and comprehensive inspections will be performed according to Appendix A-2 using the applicable inspection forms/documentation in Appendix B.

6.1 Geomembrane Liner

The inspector shall inspect for any exposed 60-mil HDPE (geomembrane) liner during the monthly inspections of turf along with the monthly and annual inspections of the turf, riprap outlet, and Southeast Cap tie-in, as detailed in Sections 6.2, 6.3, and 6.4, respectively. Upon identification of exposed liner, the inspector shall check for damage to the geomembrane liner and record the findings on the inspection checklist. Refer to Section 6.2 – Turf, if damage to the geomembrane liner is identified.

Any exposed and damaged areas shall be flagged on the turf (Section 6.2) with care taken not to damage underlying liner, recorded on the inspection checklist (noting the location and size), and repaired within 4 working days or prior to the next forecasted rain event, whichever is sooner. If a damaged liner area is discovered during inclement weather, it shall be repaired as soon as weather permits. Repairs to the geomembrane liner shall be made by a trained and approved welder using a 60-mil HDPE liner patch. The repairs shall be in accordance with the Geomembrane Liner Repair Procedure (Appendix C-1) to meet requirements in Specification 02270 – Geomembrane with reference to Drawing AB-36.

AGRU/AMERICA, Inc. warrants the 60-mil HDPE liner. The warranty provides for replacement of materials if the liner is found defective. Warranty information for the 60-mil HDPE liner is in Appendix E-10.

6.2 Turf

A general inspection will be performed monthly and following severe weather to check for signs of burrowing animals, erosion gullies and eroded areas as detailed on Drawing AB-36. Any items in need of repair shall be recorded on the inspection checklist and addressed within 7 days. Areas requiring seeding shall be vegetated with a seed mixture appropriate for the area to

minimize erosion and barren areas with reference to Specification 02935. The appropriate seed mix may be evaluated by the Commonwealth during the IMP O&M period.

Maintaining vegetation for the SE Cap will require routine maintenance including mowing vegetation (maximum height to be no greater than 24-inches or other height appropriate for utilized seed mix), weed control, and the addition of soil amendments, as necessary to maintain vegetative cover and to minimize erosion.

6.3 Riprap Outlet

A general inspection will be performed monthly and following severe weather to verify the integrity of the riprap, check for debris, and if exposed, verify that the composite drainage net is not damaged. Annually, the inspector shall verify that the side-slopes are maintained and inspected for brush growth.

Any damage shall be recorded on the inspection checklist and repaired within 30 days. Brush and debris shall be removed from the riprap area within 14 days in accordance with the Commonwealth procedures. Riprap shall be evaluated and maintained meeting requirements in Specification 02271 and Specification 02420 with reference to Drawing AB-36. Also, if the composite drainage net is damaged, repairs shall be in accordance with Specification 02275. Weeds and woody vegetation (greater than 1-inch in diameter) shall be eliminated to minimize damage to underlying geosynthetics and to prevent reduction of stormwater flow capacity along the riprap outlet.

6.4 Southeast Cap Tie-in

A general inspection will be performed monthly to verify the integrity of the cap transition between the Southeast Cap and the IRP Cap, e.g., check for signs of liner being pulled out. Annually, the inspector shall verify the integrity of the anchor trenches.

Any damage in the anchor trenches shall be recorded on the inspection checklist and repaired within 7 days. Repairs of geomembrane liner and anchor trenches shall be in accordance with Section 3.1.1 and Section 3.4.3 to meet requirements in Specification 02270 and Specification 02275 with reference to Drawing AB-36.

7.0 General Site Components

General site components include roadways, site security, monitoring wells, alluvial wells, stream samplers, the survey tower, and erosion monitoring. Pumping and solidification of MFDS liquids may also be required periodically. The as-builts provide the location of the general site components that at MFDS. General and comprehensive inspections, as detailed in text, will be performed according to Appendix A-2 using the applicable inspection forms in Appendix B.

7.1 Maxey Flats Disposal Site Roadways

A general inspection will be performed monthly and following severe weather along the site access roadway and site perimeter roadways. The inspector shall check for potholes, rutting, and aggregate washout. On a semi-annual basis, the inspector shall verify that the road surface and sideslopes are maintained.

Any maintenance items shall be recorded on the inspection checklist. The site perimeter roadways shall be repaired within 7 days and the site access road shall be repaired within 30 days. MFDS roadways shall be evaluated and maintained to meet requirements in Specification 02208 – Site Roadways with reference to Drawing AB-4 through Drawing AB-8, and Drawing AB-44.

7.2 Maxey Flats Disposal Site Security

Pursuant to the SOW, access to the Restricted Area shall be physically controlled to prevent inadvertent intrusion onto MFDS. The north perimeter fence and the IRP Cap perimeter fence serve as means to maintain MFDS security which includes protection from intrusion by animals and unauthorized individuals along with protection of the public. Therefore, maintaining the integrity of the perimeter fence system is of utmost importance to ensure compliance with the SOW.

A general inspection of the north perimeter fence and the IRP Cap perimeter fence shall be performed on every workday, weather permitting. The inspector shall verify that the gates and latches operate properly and with ease and check for signs of breach by animals or trespassers. The inspector shall also visually check that the tension wire is strung tightly, fencing is grounded, and for any sign of rust. Also, the inspector shall verify that the two traffic control gates at the EDB concrete emergency spillway are operational in accordance with Commonwealth security and health and safety procedures. The Commonwealth shall record the daily inspections of the MFDS security features on a weekly log (Appendix B). On a semi-annual basis, the inspector shall verify that the steel posts and concrete footers are structurally

sound, that any signs of rust are not compromising the integrity of the fence, and that the "Restricted Access Area" signs are properly posted.

Any damage shall be recorded on the inspection checklist and temporary measures shall be implemented immediately to ensure the integrity of the perimeter fence system. The Commonwealth shall maintain items on-site to implement temporary measures for repair of perimeter fencing. Upon installation of temporary measures, the Commonwealth shall proceed to implement permanent repair measures to ensure MFDS security. Fencing, gates, and locks shall be maintained to meet requirements in Specification 02831 – Chain Link Fence with reference to manufacturer's cut-sheets (Appendix E-11), and Drawing AB-4 through Drawing AB-8, and Drawing AB-44. The routine maintenance shall consist of an application of an oil product to the hinges on a monthly basis and the Commonwealth may use a spray rust preventative product, as needed, to maintain integrity of the perimeter fence and the traffic control gates.

The fence grounding shall be maintained to meet requirements in Specification 16370 -Electrical Distribution System, Areal and Specification 16375 - Electrical Distribution System (Low Voltage) with reference to Drawing AB-44.

7.3 Alluvial Wells

As detailed in the PSVP, Section 3.0 – Scope of Contaminant Monitoring, and Section 3.1.2.2 – Alluvial Monitoring Well Sampling, alluvial wells are located within the MFDS Buffer Zone as monitoring points (Figure 7-1 and Drawing AB-15) to support monitoring demonstrating conformance with the SOW. Water samples shall be analyzed in accordance with Section 3.0 of the PSVP.

To support the sampling as detailed in Table 6 of the PSVP, a general inspection of the 14 alluvial wells will be performed quarterly to verify that the padlocks and steel caps are secure on each well. On a semi-annual basis, or whenever a groundwater sample/water level is obtained, the inspector shall verify that the protective casing is in working condition (operable locks and caps), and measure total casing depth for each alluvial well. Also, the inspector shall verify the integrity of the four bollards at each alluvial well (structurally sound and protecting the alluvial well from damage). The alluvial wells are used infrequently and should remain free of silt, sand, and clay accumulation. Any damage shall be recorded on the inspection checklist and repaired prior to the next sampling event.

If an inspection reveals that the screened interval is partially blocked, steps shall be taken to free the casing of all accumulated material. The concrete well pad shall be in a condition that provides drainage of surface water away from the installation. During performance monitoring, abnormal water levels, pH readings, specific conductance readings or laboratory results will be evaluated for possible well seal failure. If an alluvial well has shown to decline in performance to a degree that the information obtained from it is no longer representative of its location and sampling data are required for monitoring by the Commonwealth, an engineering evaluation shall be performed to determine whether to rehabilitate, abandon, or replace the well. If rehabilitation is determined, the alluvial well shall be maintained to meet requirements in Specification 02671 – Well Installation and with reference to Drawing AB-15.

7.4 Monitoring Wells

As detailed in the PSVP, Section 2.0 – Monitoring of Physical Conditions, monitoring wells are located around the IRP Cap perimeter as monitoring points in accordance with Drawing AB-12 and Table 7-1. Table 7-1 indicates the monitoring well dimensions and monitoring method.

To support data collection, a general inspection of the 16 monitoring wells to be monitored in accordance in the Commonwealth procedures will be performed quarterly to verify that the padlocks and steel caps are secure. On a semi-annual basis, or whenever a groundwater sample/water level is obtained, the inspector shall verify that the protective casings are in working condition (operable locks and caps) and measure total casing depth of each monitoring well. The monitoring wells are used infrequently and should remain free of silt, sand, and clay accumulation. Any damage shall be recorded on the inspection checklist and repaired prior to the next sampling event.

If the inspection reveals that the screened interval is blocked, steps shall be taken to free the casing of all accumulated material. The concrete well pad shall be in a condition providing drainage of surface water away from the installation. During performance monitoring, abnormal water levels, pH readings, specific conductance readings, or laboratory results will be evaluated for possible well seal failure. If seal failure is present, the installation shall be removed and replaced. If a monitoring well has shown to decline in performance to a degree that the information obtained from it is no longer representative of its location and sampling is required for monitoring by the Commonwealth, an engineering evaluation shall be performed to determine whether to rehabilitate, abandon, or replace the well. If rehabilitation is determined, the monitoring well shall be maintained to meet requirements specified in Specification 02671.

7.5 Samplers

Automated sequential samplers and flow activated samplers (ISCO portable samplers) are located along the creeks and drainage channels (Figure 7-1 and Figure 7-2) to collect water samples from waters flowing offsite to support monitoring demonstrating conformance with the SOW as detailed in the PSVP, Section 3.0 – Scope of Contaminant Monitoring. Water samples shall be gathered and analyzed in accordance with Section 3.0 of the PSVP.

To support sampling as detailed in Table 6 of the PSVP, an inspection will be performed monthly and following severe weather to verify that the ISCO portable samplers are structurally sound and located along the creeks and drainage according to Figure 7-2. Any damage to the samplers shall be recorded on the inspection checklist and repaired/replaced as soon as practicable. If the sample location is critical, a sampler may be used temporarily from a less critical location. Repair, maintenance, and replacement shall be performed in accordance with manufacturer's requirements (Appendix E-12).

7.6 Erosion Monitoring of Drainage Channels

As detailed in the PSVP, Section 2.0 – Monitoring of Physical Conditions, erosion monitoring at MFDS will provide a means for determining erosion of the main drainage channels and mass material movement in the adjacent hill slopes that drain toward the drainage channels. As part of each EPA statutory 5-year review during the IMP, erosion-monitoring data shall be collected in accordance with Section 2.0 and Tables 1 and 2 of the PSVP with reference to Drawing AB-4 through Drawing AB-8.

7.6.1 East Main Drainage Channel

Erosion monitoring of the East Main Drainage Channel (Figure 7-3) and evaluation of data will be in accordance with Section 2.0 and Table 2 of the PSVP. Inspection and maintenance of the East Main Drainage Channel is addressed in Section 5.0 – Drainage Channels Outside the Initial Remedial Phase Cap.

A walking inspection of the East Main Drainage Channel will be performed on a semi-annual basis (early spring and fall) and following severe weather. The inspector shall identify unacceptable erosion in accordance with Table 2 of the PSVP and with reference to Drawing AB-38 through Drawing AB-40. The inspector shall also verify that the monuments are undisturbed and structurally sound, check that the brass discs are grouted, and that the coordinates are clearly marked on the survey monuments.

Record on the inspection checklist any dislodged monuments and surface damages compromising the use of the monuments for benchmarks during monitoring of the drainage channel. Repairs shall be made prior to the next monitoring event or as soon as practical and shall be in accordance with the Concrete Repair Procedure (Appendix C.3) to meet requirements in Specification 03300 with reference to Drawing AB-38.

7.6.2 South and West Drainage Channels

Due to the IRP Cap re-grading and storm water diversion, future erosion of the south and west hillslopes will result directly from rain falling directly on the hill slopes and not runoff from the IRP Cap area. Erosion monitoring of the south and west drainage channels will include monitoring the cross-sectional areas once every 5 years in accordance with Section 2.0 and Table 2 of the PSVP. Inspection and maintenance of the inlet area to the South Drainage Channel is addressed in Section 5.2 – South Drain Inlet Area.

A walking survey of the south and west drainage channels will be performed on a semi-annual basis (early spring and fall) and following severe weather. The inspector shall identify unacceptable erosion in accordance with Table 2 of the PSVP.

7.6.3 Adjacent Hill Slopes

Erosion monitoring of mass material movement along the hillslopes and evaluation shall include photographic documentation in accordance with Section 2.0 and Table 2 of the PSVP.

A visual inspection for mass material movement and major slope failures of the hill slopes at the east, south and west drainage basins shall be performed on a semi-annual basis (early spring and fall) and following severe weather. The inspector shall identify mass material movement or a change in the course of normal drainage in accordance with Section 2.0 and Table 2 of the PSVP.

7.7 Maxey Flats Disposal Site Liquids

7.7.1 Radioactive Contaminated Liquids Below "Free Release" Limits

In the course of required maintenance at MFDS, the Commonwealth is obligated to pump any liquids that accumulate at the headwall sumps beneath the liner battens, in subsided areas, and around the site. A general inspection shall be performed monthly to check for accumulated liquids at the headwall sumps beneath the liner battens, in subsided areas, and around the site. Accumulated liquids shall be sampled for radioactive contaminants to determine if the liquids pass "free release" requirements in accordance with 10 CFR SS 20.1301 and 20.1302 (902 KAR 100:015 Section 2 and 100:019 Sections 10 and 11). If radionuclide concentrations are below

the "free release" levels, the liquids may be released from the area without treatment. If the radionuclide concentrations are above the "free lease" levels, the liquids shall be treated as liquids from the trenches (e.g., leachate) and processed as detailed in Section 7.7.2.

7.7.2 Radioactive Contaminated Liquids Above "Free Release" Limits

Data collected from extended sumps (Section 3.1.3) and from monitoring subsidence areas (Section 3.3) are critical in monitoring levels of leachate in the trenches and establishing trends as detailed in Section 2.0 – Monitoring of Physical Conditions of the PSVP. Upon a significant increase in the sump levels or an upward trend, the Commonwealth shall inspect the sump(s) and the IRP Cap area in accordance with Section 3.1 – Geomembrane Liner. An evaluation shall be performed to determine if maintenance along the IRP Cap is necessary.

The Commonwealth shall pump, solidify, and dispose of liquids from the collection sump at the headwalls, subsided areas, or from around the site that are above the "free release" in accordance with the SOW. Former LSF Tank 1 was extended during the IRP and remains for the Commonwealth's non-liquid waste disposal (e.g., solidified liquid and dry active waste). Maintenance activities for the former LSF area are covered in Section 3.7 – Former Leachate Storage Facility Area which address the tank extensions and the cathodic protection system for former LSF Tank 1.

7.7.2.1 Pumping, Solidification, and Disposal of Contaminated Liquids

Pursuant to the Task IV.A of Section IV in the SOW, the IMP shall address trench leachate management that may include, based on PSVP data, pumping of select sumps. Pumping, storage, solidification, and disposal of contaminated liquids shall be performed in accordance with the SOW.

As stated in Section III.A.2 - Treatment of Contaminated Liquids and Section III.A.3. - Remedial Standards of the SOW, contaminated liquids include extracted trench leachate and liquids containing radioactive contaminants in concentrations greater than the free release limits as detailed in 10 CFR SS 20.1301 and 20.1302 along with 902 KAR 100:015 Section 2, 100:019 Section 10 and 11 (as amended) and 902 KAR 100:021 Sections 6, 7, 8(2)(b) and 8(2)(c).

7.8 Survey Tower

A survey tower to assist in performing topographical surveys pursuant to the PSVP is located in the southeast portion of MFDS. The location of the survey tower is shown on Drawing AB-4 and Drawing AB-7.

A general inspection will be performed quarterly to inspect for signs of termite infestation and loose boards, and to verify that the ladder is securely attached to the tower. Annually, the inspector shall check that the concrete footers are free of surface damages and verify that the tower is structurally stable.

Any damage shall be recorded on the inspection checklist, evaluated, and repaired within 30 days or prior to utilizing the tower, whichever is sooner, in accordance with the as-builts. At a minimum, the routine maintenance shall consist of water seal product application to the structure in accordance with the manufacture recommendations.

7.9 Miscellaneous Turf Areas

The miscellaneous site turf areas include the borrow pit, the stockpile, along the East Main Drainage Channel, and areas along the IRP Cap as identified on Figure 7-4.

A general inspection will be performed monthly and following severe weather to check for erosion gullies, eroded areas, and debris along the side-slopes. Annually, the inspector shall verify that the side-slopes are maintained.

Any items in need of repair shall be recorded on the inspection checklist and addressed within 7 days. Areas requiring seeding shall be vegetated with a seed mixture appropriate for the area to minimize erosion and barren areas with reference to Specification 02935. The appropriate seed mix may be evaluated by the Commonwealth during the IMP O&M period.

Maintaining vegetation for the seeded areas, as identified on Figure 7-4, will require routine maintenance including mowing vegetation (maximum height to be no greater than 24-inches or other height appropriate for utilized seed mix), weed control, and the addition of soil amendments as necessary to maintain vegetative cover and minimize erosion.

Tables

Table 3-1
IRP Cap Sumps

Areas	Sump ID	Notes
1	27-5	ABANDON
	27-9	MONITOR WITH H-500XL
	27-8	ABANDON
	27-6	ABANDON
	27-10	ABANDON
	27-M	ABANDON
	27-7	ABANDON
	27-11	MONITOR WITH H-500
	28-W	MONITOR WITH H-500XL
	28-4	ABANDON
	28-8	ABANDON
	28-12	MONITOR WITH H-500
	28-7	ABANDON
	28-9	ABANDON
	28-10	ABANDON
	28-M	ABANDON
	28-6	MONITOR WITH H-500
	28-11	MONITOR WITH H-500
	29-5	MONITOR WITH H-500XL
	29-9	ABANDON
	29-8	ABANDON
	29-4	ABANDON
	29-7	ABANDON
	29-10	ABANDON
	29-6	MONITOR WITH H-500
	29-3	ABANDON
	29-W	MONITOR WITH H-500
2	30-4	MONITOR WITH H-500XL
	30-6	ABANDON
	30-M	ABANDON
	30-7	ABANDON
	30-8	MONITOR WITH H-500
	30-5	ABANDON
	30-9	ABANDON
	30-E	ABANDON
	30-10	MONITOR WITH H-500
	31-7	MONITOR WITH H-500
	31-2	MONITOR WITH H-500XL
	31-6	ABANDON
	31-10	ABANDON
	31-4	ABANDON
	31-9	MONITOR WITH H-500
	31-3	ABANDON
	31-11	ABANDON
	31-8	ABANDON
	31-5	MONITOR WITH H-500
	32-7	ABANDON
	32-W	ABANDON

Extended sumps have H-500 and H-500XL Water Logs installed that are manufactured by H_2OFX

Sumps designated as "KEEP UNDER LINER" were cut off below finish grade, capped, and will be able to be used by the Commonwealth in the future if the need arises.

Refer to Drawing AB-10 for location of abandoned and dormant sumps.

Refer to Drawing AB-12 for location of extended sumps.

Refer to Drawing AB-13 for coordinates, inside casing diameters, and As-Built elevations for the abandoned, dormant, and extended sumps.

Table 3-1
IRP Cap Sumps

Areas	Sump ID	Notes
	32-9	MONITOR WITH H-500XL
	32-4	ABANDON
	32-8	ABANDON
	32-E	MONITOR WITH H-500
	41	ABANDON
3	35-7	ABANDON
	35-6	MONITOR WITH H-500XL
	35-3	ABANDON
	35-5	ABANDON
	35-8	ABANDON
	35-2	MONITOR WITH H-500
	35-1	ABANDON
	35-4	ABANDON
	36-6	MONITOR WITH H-500XL
	36-E	ABANDON
	36-5	ABANDON
	36-7	MONITOR WITH H-500
	36-4	ABANDON
	36-3	MONITOR WITH H-500XL
	47-W	ABANDON
	47-E	ABANDON
	33-1	ABANDON
	33-2	ABANDON
	33-3	ABANDON
	33-4	ABANDON
	33-5	ABANDON
	33-6	ABANDON
	33-7	ABANDON
	33-8	ABANDON
	33-9	ABANDON
	33-10	ABANDON
	33-11	ABANDON
	33-12	ABANDON
	33-13	ABANDON
	33-14	ABANDON
	33-15	ABANDON
	33-16	ABANDON
	33-17	ABANDON
	33-18	ABANDON
	33-19	ABANDON
4	24-7	ABANDON
	24-6	MONITOR WITH H-500
	24-8	ABANDON
	24-4	ABANDON
	24-9	ABANDON
	24-3	ABANDON
	24-5	MONITOR WITH H-500XL
	25-9	MONITOR WITH H-500

Table 3-1
IRP Cap Sumps

Areas	Sump ID	Notes
	25-4	ABANDON
	25-5	MONITOR WITH H-500
	25-8	ABANDON
	25-6	ABANDON
	25-3	ABANDON
	25-7	MONITOR WITH H-500XL
	26-2	MONITOR WITH H-500
	26-6	ABANDON
	26-5	ABANDON
	26-8	ABANDON
	26-3	MONITOR WITH H-500XL
	26-7	ABANDON
	26-4	MONITOR WITH H-500
5	16-L	ABANDON
	22-L	ABANDON
	17-L	ABANDON
	14-L	ABANDON
	13-L	ABANDON
	18-9	MONITOR WITH H-500
	18-E	ABANDON
	18-7	ABANDON
	18-5	ABANDON
	18-8	ABANDON
	18-6	MONITOR WITH H-500XL
	18-W	ABANDON
	20-12	ABANDON
	20-8	ABANDON
	20-W	MONITOR WITH H-500
	20-5	ABANDON
	20-9	MONITOR WITH H-500XL
	20-10	ABANDON
	20-7	MONITOR WITH H-500
	20-E	ABANDON
	20-6	ABANDON
	20-11	MONITOR WITH H-500
	23-9	MONITOR WITH H-500
	23-4	ABANDON
	23-8	ABANDON
	23-5	MONITOR WITH H-500XL
	23-6	MONITOR WITH H-500
	23-7	ABANDON
	34-1	ABANDON
	34-2	ABANDON
	34-3	ABANDON
	34-4	ABANDON
6	10-9	MONITOR WITH H-500XL
	10-5	ABANDON
	10-10	ABANDON

Table 3-1
IRP Cap Sumps

Areas	Sump ID	Notes
	10-8	MONITOR WITH H-500
	10-4	ABANDON
	10-3	ABANDON
	10-7	MONITOR WITH H-500
	15-4	MONITOR WITH H-500
	15-5	MONITOR WITH H-500
	15-7	ABANDON
	15-6	MONITOR WITH H-500XL
	15-8	MONITOR WITH H-500
	11-5	MONITOR WITH H-500XL
	11-S/E	ABANDON
	11-7	ABANDON
	11-4	ABANDON
	11-S/W	ABANDON
	11-6	MONITOR WITH H-500
	19-W	ABANDON
	19-7	MONITOR WITH H-500XL
	19-5	MONITOR WITH H-500
	19-8	ABANDON
	19-E	ABANDON
	19-6	MONITOR WITH H-500
7	1-3	ABANDON
	1-1	ABANDON
	1-2	MONITOR WITH H-500XL
	5-S2	ABANDON
	5-S3	ABANDON
	8-L	ABANDON
	6-L	ABANDON
	4-L	ABANDON
	7-4	MONITOR WITH H-500
	7-8	ABANDON
	7-9	ABANDON
	7-3	ABANDON
	7-5	MONITOR WITH H-500
	7-2	ABANDON
	7-7	MONITOR WITH H-500XL
	7-6	ABANDON
	3-6	ABANDON
	1-S	ABANDON
	1-S2	ABANDON
	3-2	MONITOR WITH H-500
	3-3	ABANDON
	2-6	MONITOR WITH H-500XL
	2-5	ABANDON
	2-4	ABANDON
	3-7	ABANDON
	3-4	MONITOR WITH H-500XL
	3-5	ABANDON

Table 3-1
IRP Cap Sumps

Areas	Sump ID	Notes
	12-L	ABANDON
	9-L	ABANDON
8	40-1	ABANDON
	40-11	ABANDON
	40-19	MONITOR WITH H-500
	40-16	ABANDON
	40-21	ABANDON
	40-14	KEEP UNDER LINER
	40-15	MONITOR WITH H-500XL
	44-19	ABANDON
	44-14	MONITOR WITH H-500
	44-20	MONITOR WITH H-500XL
	42-11	MONITOR WITH H-500
	42-19	MONITOR WITH H-500XL
	42-18	ABANDON
	43-15	ABANDON
	43-13	MONITOR WITH H-500XL
	43-12	KEEP UNDER LINER
	43-11	ABANDON
	43-10	KEEP UNDER LINER
9	40-3	ABANDON
	40-17	MONITOR WITH H-500
	40-20	ABANDON
	40-2	ABANDON
	40-18	ABANDON
	44-21	ABANDON
	44-10	ABANDON
	44-7	ABANDON
	44-22	MONITOR WITH H-500
	44-8	KEEP UNDER LINER
	44-3	KEEP UNDER LINER
	42-6	ABANDON
	42-7	KEEP UNDER LINER
	42-17	ABANDON
	42-20	MONITOR WITH H-500XL
	42-21	ABANDON
	43-9	MONITOR WITH H-500
	43-16	ABANDON
	43-7	MONITOR WITH H-500XL
	43-17	ABANDON
10	40-5	ABANDON
	40-6	ABANDON
	40-22	MONITOR WITH H-500XL
	44-5	MONITOR WITH H-500XL
	44-4	ABANDON
	42-5	ABANDON
	48-E	ABANDON
	48-W	ABANDON

Table 3-1
IRP Cap Sumps

Areas	Sump ID	Notes
	49-DW	ABANDON
	52-DW	ABANDON
	52-1	ABANDON
	49-1	ABANDON
	50-DW	ABANDON
	50-1	ABANDON
	50-2	ABANDON
	50-3	ABANDON
	51	ABANDON
11	37-1	ABANDON
	37-3	MONITOR WITH H-500XL
	39-5	ABANDON
	39-3	ABANDON
	39-1	MONITOR WITH H-500XL
	38-2	ABANDON
	38-5	MONITOR WITH H-500XL
	38-3	ABANDON
	38-1	ABANDON
	SLT-4	ABANDON
	SLT-1	ABANDON
	46-1	MONITOR WITH H-500
	SLT-2	ABANDON
12	SLT-3	ABANDON
	46-2	MONITOR WITH H-500
	46-3	MONITOR WITH H-500XL
	38-4	MONITOR WITH H-500
	38-6	ABANDON
	45-2	ABANDON
	45-1	MONITOR WITH H-500XL
	39-4	MONITOR WITH H-500
	39-2	ABANDON
	37-5	ABANDON
	37-4	MONITOR WITH H-500
	37-2	ABANDON

Table 3-2

Permanent Site Control Monument Coordinates

No.	North	East
MFDS1	278,327.1	2,195,192.1
MFDS2	276,943.6	2,194,143.9
MFDS3	276,146.5	2,195,172.3
MFDS4	277,659.9	2,196,057.2

Refer to Drawing AB-4 for location along the MFDS perimeter and elevation of monument.

Table 3-3

Subsidence Monitoring Control Point Coordinates

No.	North	East
1	276,929	2,194,385
2	277,051	2,194,501
3	277,065	2,194,625
4	277,143	2,194,673
5	277,284	2,194,459
6	277,281	2,194,621
7	277,413	2,194,725
8	277,478	2,194,627
9	277,543	2,194,690
10	276,728	2,194,626
11	276,829	2,194,704
12	276,883	2,194,844
13	276,965	2,194,697
14	276,976	2,194,798
15	277,013	2,194,941
16	277,074	2,194,986
17	276,568	2,194,955
18	276,487	2,195.026
19	277,177	2,195,335
20	277,146	2,195,406
21	277,114	2,195,484
22	277,085	2,195,540
23	277,270	2,195,510
24	277,431	2,195,485
25	277,384	2,195,561
26	277,346	2,195,645
27	277,320	2,195,694
28	277,675	2,195,432

Table 7-1

Monitoring Well Status

Well No.	Ground Elev. (FT, MSL)
UF-45	1,054.2
ESI-01	1,050.7
ESI-23	1,050.0
ESI-19	1,050.0
ESI-12	1,049.6
UE-02	1,050.2
UE-11	1,051.3
ESI-02	1,047.5
UK-1	1,046.1
N2-B	1,044.5
ESI-04	1,048.0
UF-01	1,050.1
UF-02	1,046.0
ESI-05	1,045.1
UF-05	1,048.9
ESI-20	1,045.2
UG-2R	1,060.0
UF-37	1,048.2

Refer to Drawing AB-12 for monitoring well locations, coordinates, and As-Built ground elevation.

Figures

Fig 3.1
3.2
7.1
7.2
7.3
7.4

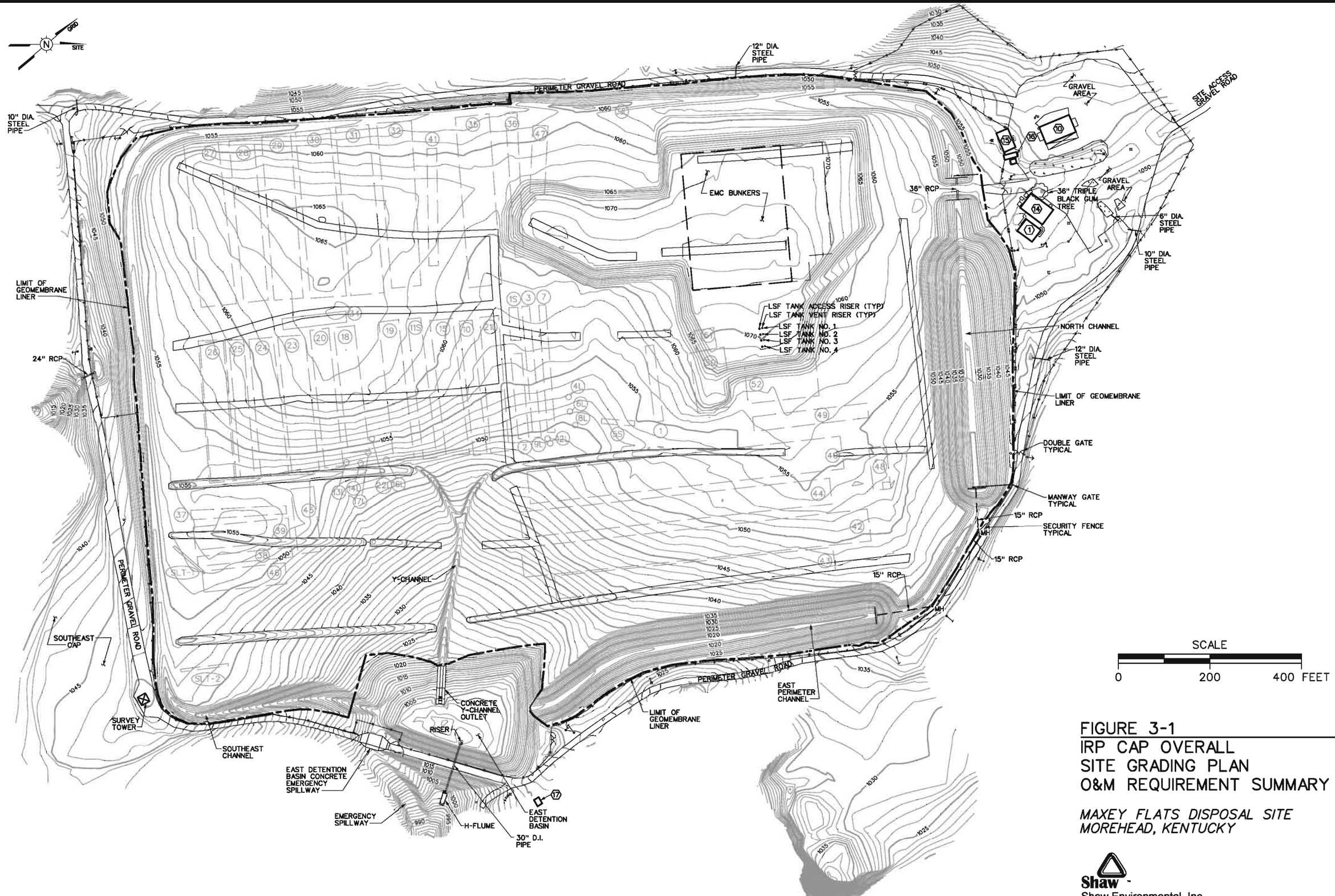

FIGURE 3-1
IRP CAP OVERALL
SITE GRADING PLAN
O&M REQUIREMENT SUMMARY

MAXEY FLATS DISPOSAL SITE
MOREHEAD, KENTUCKY

Shaw
Shaw Environmental, Inc.

DWG. NO.: o&mfig3-1.dgn	DATE LAST REV.: 6/27/03	DRAFT. CHCK. BY: A. BILLMAN	STARTING DATE: 6/8/98
PROJ. NO.: 838409	DRAWN BY: L. STOUT	ENGR. CHCK. BY: S. MAYES	DRAWN BY: C. BENTLEY
INITIATOR: A. BILLMAN		PROJ. MGR.: M. CAPPS	

08:25:38 AM 09/24/03
jwaters
C:\CADD\Design\o&mfig3-1.dgn

NOTES:

1. SUBSIDENCE MONITORING CONTROL POINT COORDINATES ARE BASED ON AS-BUILT CONDITION AT TIME OF INSTALLATION IRP CAP COMPLETION.

LEGEND:

⌖ SUBSIDENCE MONITORING CONTROL POINT

SCALE

0 200 400 FEET

FIGURE 3-2
SUBSIENCE MONITORING CONTROL POINTS O&M REQUIREMENT SUMMARY

MAXEY FLATS DISPOSAL SITE
MOREHEAD, KENTUCKY

Shaw
Shaw Environmental, Inc.

STARTING DATE: 05/07/01	DATE LAST REV.:6/27/03	DRAFT. CHCK. BY: A. BILLMAN	INITIATOR: A. BILLMAN	DWG. NO.: o&mfig3-2.dgn	
DRAWN BY: J. WATERS	DRAWN BY: L. STOUT	ENGR. CHCK. BY: S. MAYES	PROJ. MGR.: M. CAPPS	PROJ. NO.:838409	
09/24/03	08:27:54 AM				
jwaters	C:\CADD\Design\o&mfig3-2.dgn				

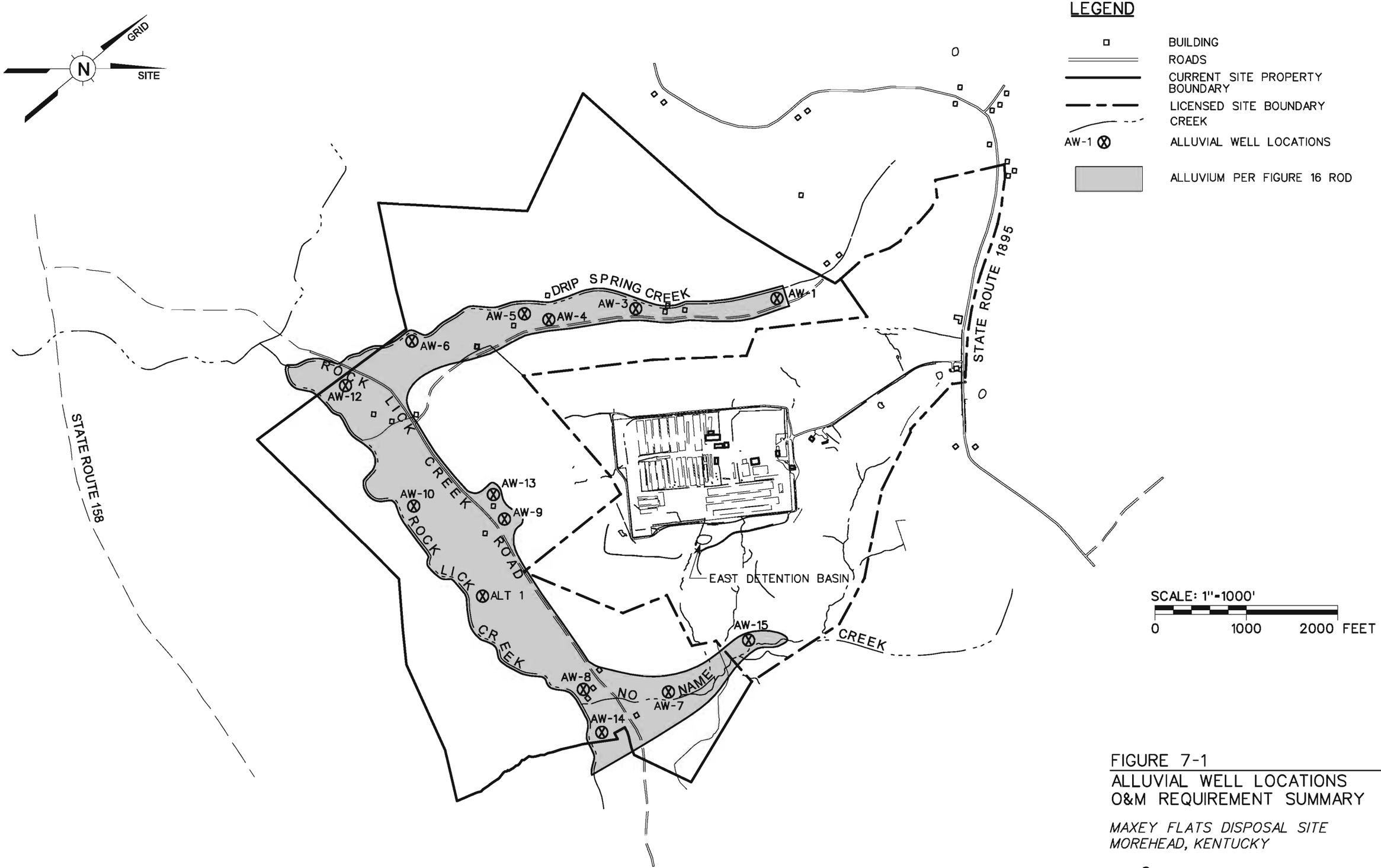

FIGURE 7-1
ALLUVIAL WELL LOCATIONS
O&M REQUIREMENT SUMMARY

MAXEY FLATS DISPOSAL SITE
MOREHEAD, KENTUCKY

Shaw
Shaw Environmental, Inc.

STARTING DATE: 12/8/00	DATE LAST REV.: 10/29/02	DRAFT. CHCK. BY: J. WATERS	INITIATOR: J. SERAFIN	DWG. NO.: o&mfig7-1.dgn	
DRAWN BY: G. PACHECO	DRAWN BY: J. WATERS	ENGR. CHCK. BY: J. SERAFIN	PROJ. MGR.: M. CAPPS	PROJ. NO.: 838409	

jwaters 08:29:17 AM 09/24/03
C:\CADD\Design\o&mfig7-1.dgn

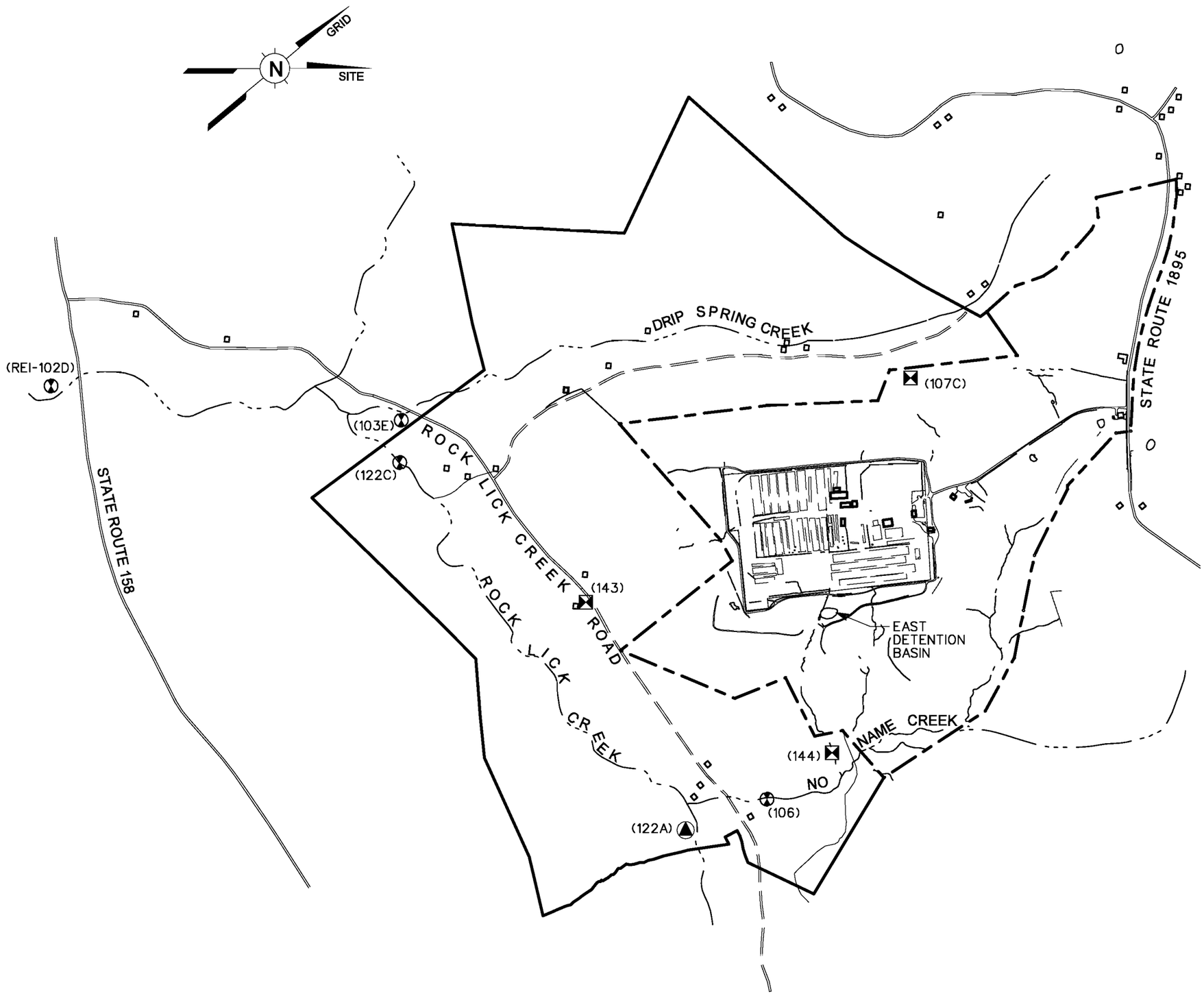

LEGEND

- BUILDING
- ROADS
- CURRENT SITE PROPERTY BUFFER ZONE
- PRE-CONSENT DECREE SITE BOUNDARY
- CREEK

4 MREM /YEAR - 20 pci/ml SAMPLING LOCATIONS:

- SURFACE WATER SAMPLE LOCATION

25 MREM /YEAR SAMPLING LOCATIONS:

- SURFACE WATER SAMPLE LOCATION

BACKGROUND:

- SURFACE WATER SAMPLE LOCATION

FIGURE 7-2

CONTAMINANT MONITORING LOCATIONS
O&M REQUIREMENT SUMMARY

MAXEY FLATS DISPOSAL SITE
MOREHEAD, KENTUCKY

Shaw
Shaw Environmental, Inc.

DWG. NO.: o&mfig7-2.dgn	DATE LAST REV.:	DRAFT. CHCK. BY: C.E.TUMLIN	STARTING DATE: 06/20/01
PROJ. NO.:838409	DRAWN BY:	ENGR. CHCK. BY:	DRAWN BY: J. WATERS
INITIATOR: J. SERAFIN			
PROJ. MGR.:M. CAPPS			

jwaters 09/24/03 08:31:19 AM
C:\CADD\Design\o&mfig7-2.dgn

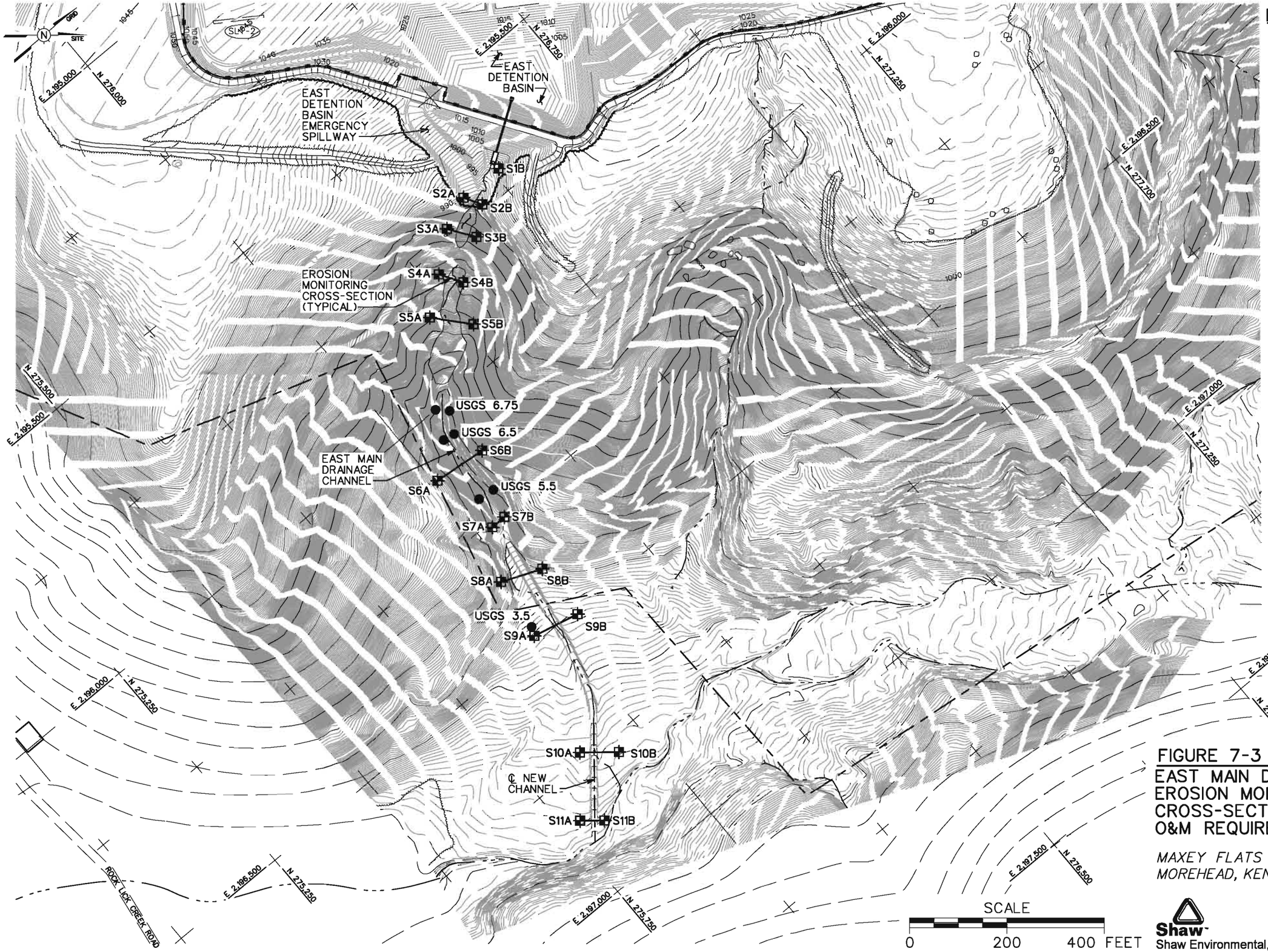

LEGEND:

- SHAW EROSION MONITORING CROSS-SECTION CONTROL POINT MONUMENT
- USGS SCREENING STATION

FIGURE 7-3

EAST MAIN DRAINAGE CHANNEL EROSION MONITORING CROSS-SECTION LAYOUT O&M REQUIREMENT SUMMARY

MAXEY FLATS DISPOSAL SITE MOREHEAD, KENTUCKY

Shaw
Shaw Environmental, Inc.

DWG. NO.: o&mfig7-3.dgn	DATE LAST REV.:	DRAFT. CHCK. BY: J. WATERS	08:41:19 AM
PROJ. NO.: 838409	DRAWN BY:	ENGR. CHCK. BY: R. NEWTON	09/24/03
INITIATOR: S. MAYES	STARTING DATE: 07/31/98	PROJ. MGR.: M. CAPPS	jwaters
DRAWN BY: R. VANDERGRIFF			c:\cadd\design\o&mfig7-3.dgn

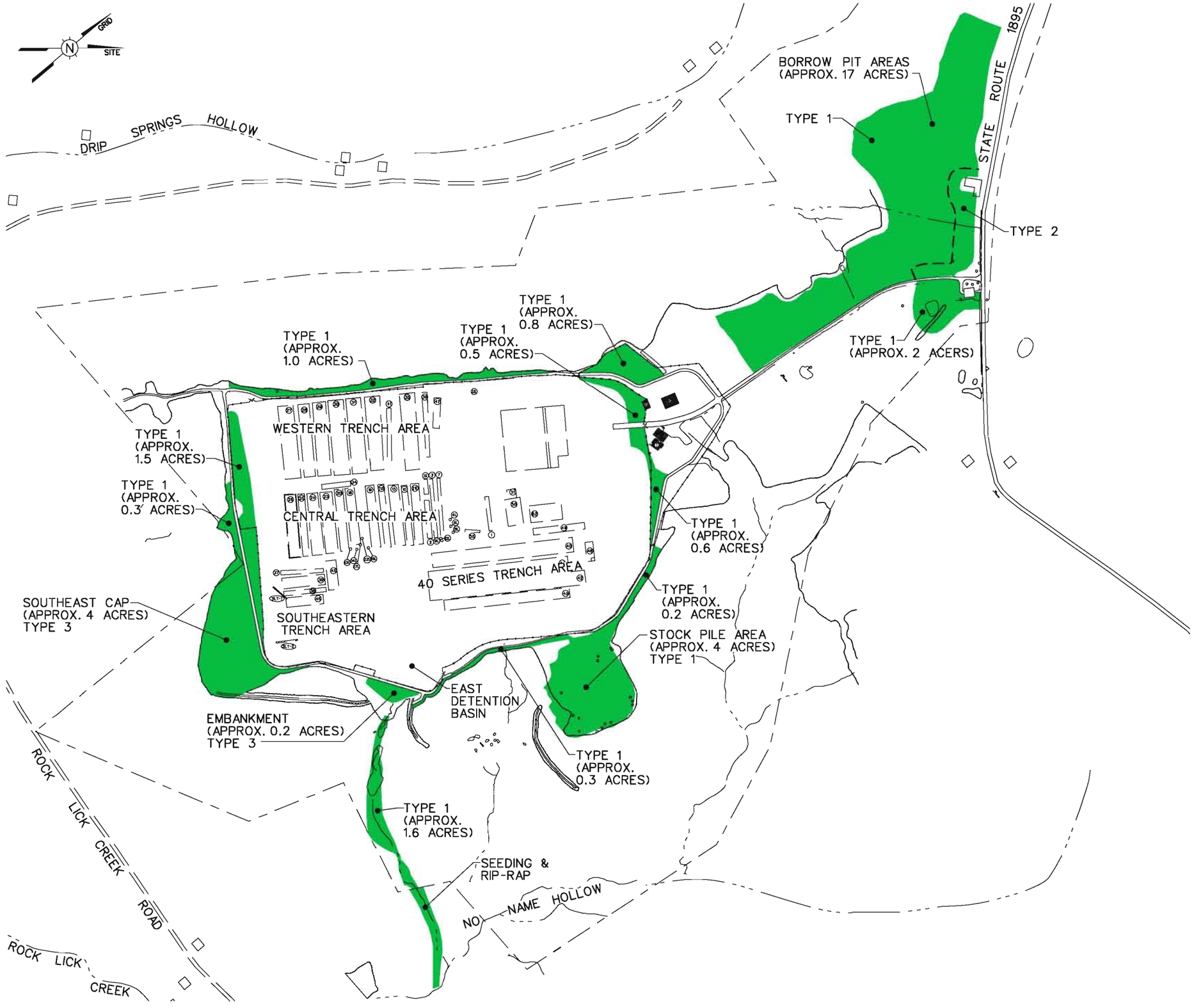

NOTES:

1. CONTOURS AND SITE FEATURES SHOWN ON THIS FIGURE ARE FOR SITE REFERENCE ONLY.

SEEDING MATERIALS:

TYPE 1: 19N-19P-19K FERTILIZER, LIME, MULCH, KENTUCKY 31 TALL FESCUE, PERINNEAL RYE, ANNUAL RYE, AND BIRDSFOOT TREFOIL.

TYPE 2: 19N-19P-19K FERTILIZER, LIME, STRAW MATS, KENTUCKY 31 TALL FESCUE, PERINNEAL RYE, ANNUAL RYE, BIRDSFOOT TREFOIL AND CROWNVETCH.

TYPE 3: 10N-10P-10K FERTILIZER, LIME, AND KENTUCKY 31 TALL FESCUE.

SCALE

0 500 1000 FEET

FIGURE 7-4
SEEDING AREA DELINEATION
O&M REQUIREMENT SUMMARY

MAXEY FLATS DISPOSAL SITE
MOREHEAD, KENTUCKY

Shaw
Shaw Environmental, Inc.

DWG. NO.: om-fig7-4.dgn
PROJ. NO.:838409
INITIATOR: A. BILLMAN
PROJ. MGR.:M. CAPPS
DRAFT. CHCK. BY: A. BILLMAN
ENGR. CHCK. BY: S. MAYES
DATE LAST REV.:09/10/03
DRAWN BY: J. WATERS
STARTING DATE: 06/24/03
DRAWN BY: L. STOUT
08:43:34 AM
09/24/03
jwaters
c:\cadd\design\om-fig7-4.dgn

Appendix A – O&M Matrices

A-1 – O&M Requirements Matrix

A-1 Operations and Maintenance Requirements

Item No.	O&M Item	General Inspections[1 & 2]	Comprehensive Inspections[3]	Documentation/ Reporting	Repair[1]/Response Time /Maintenance	Manufacturer's Requirements	Calibrations	Warranties	Drawings	References	Repair Procedures	QA/QC
1.00					**IRP Cap**							
1.01	Geomembrane Liner	Visual / Monthly Verify Liner is Free of Penetrations/Tears/Thin Spots & Check for Soft Spots or Wet Areas	Check the Liner Seams/Annual Check the Exposed and Accessible Field Seams with an Airlance Test and Visually Examine Factory Seams for Penetrations/Tears/Thin Spots	Complete Provided Inspection/Repair Form Engineering Evaluation when the IRP Cap As-Built Grades are Changed Other than for Routine Maintenance	Within 4 Working Days or Prior to a Forecasted Rain Event, Whichever is Sooner	JP Stevens O & M Requirements Section 3.1.1	N/A	O & M Requirements Section 3.1.1	AB4 - AB8 & AB16	OMRS Section 02270 - Geomembrane	O & M Requirements Section 3.1.1	RWDS Section 02270 - Geomembrane
1.02	Geomembrane Liner Boots	Visual / Monthly Verify No Penetrations/ Tears/Thin Spots at the Boot Transition & Note any Signs of Liner Fatigue, Accumulated Water, Settlement, etc., at the Sump Extension	Visual / Annual Verify Secure Fit with Sump Extension & Inspect for Signs of Deterioration (Tears/Penetrations/Thin Spots)	Complete Provided Inspection/Repair Form	Liner Repairs / Within 4 Working Days or Prior to a Forecasted Rain Event Whichever is Sooner Accumulated Water / Within 24 Hours or as Necessary to Prevent a H&S Concern or Potential Liner Damage Subsidence Repair / Within 60 Days or as Necessary to Maintain IRP Cap Elevations & Minimize Liner Fatigue, H&S Concerns, & Potential Water Infiltration	N/A	N/A	None	AB12 - AB14	OMRS Section 02270 - Geomembrane	O & M Requirements Section 3.1.2	RWDS Section 02270 - Geomembrane
1.03	Sump Extensions	Visual / Monthly Check that the Transition is Free of Penetrations/Tears/Thin Spots, Verify Integrity of Sump Lid & Geomembrane Liner Boot *See Item 1.02 for the Geomembrane Liner Boot Inspection Requirements	N/A	Complete Provided Inspection/Repair Form	Sump Extension / Prior to Next Monitoring Download Event	N/A	N/A	None	AB10-AB14	OMRS Section 02094 - Sump Extensions Section 02270 - Geomembrane PSVP Section 2.3 - Selected Sump Measurement Section 2.3.1 - Data Collection and Evaluation Section 2.5 - Horizontal Infiltration	O & M Requirements Section 3.1.3	N/A
1.04	Data Loggers	Visual / Monthly Verify Integrity of Sump Lid/Data Logger System	Calibrate Committee & Commonwealth Supplied Data Loggers/Quarterly Secure & Operates Properly Hand Measurement / Annually In Dry Sumps to Verify Data Logger Measurement	Record Data Reading Before and After Calibration Record Data Logger Repair or Replacement	Data Logger Repair or Replacement / Within 60 Days Data Logger Calibration / Upon Repair or Replacement	O & M Requirements Section 3.1.3	O & M Requirements Section 3.1.3	None	AB12-AB14	OMRS Section 02094 - Sump Extensions PSVP Section 2.3 - Selected Sump Measurement Section 2.3.1 - Data Collection and Evaluation	O & M Requirements Section 3.1.3	N/A
1.05	Headwall Structure	Visual / Twice a Month Verify Openings are Free of Obstructions & Check for Liner Ballooning at Battens	Visual / Annual Verify No Surface Spalling or Cracks >1/16 Inches, Check Integrity of Construction Joints, Check Integrity of Trash Grate/Restricting Plate, Verify no Seepage Points Along the Batten Bar Strip	Complete Provided Inspection/Repair Form Record Debris/ Obstruction Removal Evaluate Construction Joints, Surface Spalling, and Cracks to Determine Required Repair	Obstruction Removal / Within 24 Hours or as Necessary to Prevent Flow Obstruction Ballooning & Remove Accumulated Water / Within 24 Hours or as Necessary to Prevent a H&S Concern or Potential Liner Damage Structure / Within 30 Days if Concrete Repairs are needed Trash Grate and Restricting Plate / Ensure Proper Seal with the RCP Invert at Headwall See Item 1.06 for the Batten Bar Response Time	N/A	N/A	None	AB4-AB8 & AB32-AB34	OMRS Section 02270 - Geomembrane Section 03100 - Concrete Formwork Section 03200 - Concrete Reinforcement Section 03300 - Concrete	O & M Requirements Section 3.2.1, 3.2.2, & 3.2.3	N/A
1.06	Headwall Battens	Visual / Twice a Month Verify Liner at the Batten Bar is Free of Penetrations/Tears/Thin Spots	Visual / Semi-Annual Verify Liner and Gasket Material are Securely Attached to Headwall at the Batten Bar Strip (No Seepage Points)	Complete Provided Inspection/Repair Form	Within 48 hours	N/A	N/A	None	AB32-AB-34	OMRS Section 02270 - Geomembrane	O & M Requirements Section 3.2.2	N/A
1.07	Collection Sump at the Headwall	Visual / Twice-a-Month Check that the Transition is Free of Penetrations/ Tears/Thin Spots along the Sump Piping, & Verify Integrity of Sump Lid	Visual / Annual Verify Connection with the Geomembrane Liner (Geomembrane Liner Boot)	Complete Provided Inspection/Repair Form	Within 48 hours	N/A	N/A	None	AB35	OMRS Section 02270 - Geomembrane	O&M Requirements Section 3.2.3	N/A

A-1 Operations and Maintenance Requirements

Item No.	O&M Item	General Inspections[1 & 2]	Comprehensive Inspections[3]	Documentation/ Reporting	Repair[1]/Response Time /Maintenance	Manufacturer's Requirements	Calibrations	Warranties	Drawings	References	Repair Procedures	QA/QC
1.00					IRP Cap							
1.08	Permanent Site Control Monuments	N/A	Visual / Annual Verify Concrete Pads & Steel Casings are Free of Surface Damages, Brass Disc is Grouted, Coordinates are Clearly Marked, & that the Structure has not been Disturbed	Complete Provided Inspection/Repair Form	Prior to Next Monitoring Event If Disturbed, New Monuments Shall be Provided	N/A	N/A	None	AB4 & AB44	OMRS Section 03100 - Structural Concrete Formwork Section 03300 - Concrete	O&M Requirements Section 3.3.1	N/A
1.09	Control Points	N/A	Visual / Annual Verify Control Points are Clearly Marked on Geomembrane Liner	Complete Provided Inspection/Repair Form	Control Points Marked Annually with Bright Colored Paint	N/A	N/A	None	O&M Figure 3-2	PSVP - IRP Cap Section 2.2 - IRP Cap Subsidence Monitoring	O & M Requirements Section 3.3.2	N/A
1.10	Subsidence Monitoring	Site-Walk / Monthly Document Areas of Water Accumulation and Any Subsidence Changes (e.g., Areas Exceeding Maximum Water Depth and Area)	Topographic Survey / Annual Verify Grades have Positive Drainage & Document Areas of Subsidence Repairs	Complete Provided Inspection/Repair Form	Remove Accumulated Water / Rope-Off Area & Pump Water from the Area Within 24-Hours or as Necessary to Prevent a H&S Concern or Potential Liner Damage Subsidence Repair / Within 60 Days or as Necessary to Maintain IRP Cap Elevations & Minimize Liner Fatigue, H&S Concerns, & Potential Water Infiltration Topographic Survey / Annually	N/A	N/A	None	AB4-AB8 O&M Figure 3-2	PSVP Section 2.2 - IRP Cap Subsidence Monitoring OMRS Section 02270 - Geomembrane Section 02300 - Earthwork	O & M Requirements Section 3.3.3	O & M Requirements Section 3.3.3 PSVP Section 2.2
1.11	Drainage Channels	Visual / Twice a Month Verify Liner is Free of Penetrations/ Tears/Thin Spots, Channels are Free of Leaves or Debris Impeding Flow, Geotextile Fabric Not Damaged (If Exposed), & Check for Soft Spots or Wet Areas	Visual / Annual Check the Exposed & Accessible Field Seams with an Airlance Test & Visually Examine the Factory Seams for Tears/Punctures/Thin Spots	Complete Provided Inspection/Repair Form	Geomembrane Liner/Within 4 Working Days or Prior to a Forecasted Rain Event Whichever is Sooner Leaves or Debris Removal/Within 14 Days or as Necessary to Prevent Flow Obstruction	N/A	N/A	None	AB4-AB8 & AB17	OMRS Section 02270 - Geomembrane Section 02275 - Geotextile & Composite Drainage Net Section 02300 - Earthwork	O & M Requirements Section 3.4.1	N/A
1.12	Diversion Berms	Visual / Twice a Month Verify Liner is Free of Penetrations/ Tears/Thin Spots, Geotextile Fabric Not Damaged (If Exposed), & Check for Soft Spots or Wet Areas	Visual / Annual Check the Exposed & Accessible Field Seams with an Airlance Test & Visually Examine the Factory Seams for Tears/Punctures/Thin Spots	Complete Provided Inspection/Repair Form	Within 4 Working Days or Prior to a Forecasted Rain Event Whichever is Sooner	N/A	N/A	None	AB4-AB8 & AB18	OMRS Section 02270 - Geomembrane Section 02275 - Geotextile & Composite Drainage Net Section 02300 - Earthwork	O & M Requirements Section 3.4.2	N/A
1.13	Anchor Trenches	Visual / Monthly Check Integrity of Anchor Trenches (Liner Pull-out, Tear/Penetrations/Thin Spots), Verify the Integrity of the Underlying Materials (If Exposed), & Check for Soft Spots or Wet Areas	Visual / Annual Check the Exposed & Accessible Field Seams With an Airlance Test & Visually Examine the Factory Seams for Tears/Punctures/Thin Spots	Complete Provided Inspection/Repair Form	Within 4 Working Days or Prior to a Forecasted Rain Event Whichever is Sooner	N/A	N/A	None	AB4-AB8 & AB17-AB18	OMRS Section 02208 - Site Roadways Section 02270 - Geomembrane Section 02275 - Geotextile & Composite Drainage Net Section 02300 - Earthwork	O & M Requirements Section 3.4.3	N/A
1.14	AB-Mats	Visual / Monthly Check for Broken Concrete Blocks, Free of Vegetative Growth Impeding Flow, Penetrations/Tears/Thin Spots in Liner (See Item 1.01), & Verify that the AB-Mats have 3 Clamps on the Long Side & 1 Clamp on the Short Side Connecting to the Adjacent AB Mats	Visual / Semi-Annual Along the SE Channel Verify that the Geomembrane Liner beneath the Encased SS cables is Free of Tears/Penetrations/Thin Spots & Check for Worn Areas, Cracking, or Penetrations in the Plastic Tubing Check that the Anchorage at the North & East Upstream Headwalls is Intact and Preventing Lateral Movement	Complete Provided Inspection/Repair Form	AB-Mat & Anchorage Repairs & Clamp Replacement / Within 14 Days or as Necessary to Minimize Lateral Movement & Prevent Potential Damage to Underlying Materials Eliminate Weeds or Woody Vegetation >1" dia. to Minimize Damage to Under Lying Geosynthetics & to Prevent Flow Reduction	O&M Requirements Section 3.5.1	N/A	None	AB5-AB8, AB17 & AB18	OMRS Section 02420 - Storm Water, Erosion, & Sediment Control	O & M Requirements Section 3.5.1	N/A
1.15	Cementitious Fill Material	Visual / Monthly Check and Note Concrete Spalling or Void Spaces Allowing Water to Pool or Erosion of Adjacent Fill Material	N/A	Complete Provided Inspection/Repair Form	Concrete Spalling & Void Spaces Repaired / Within 14 Days or as Necessary to Minimize Erosion of Cementitious Fill Material, Hydrostatic Pressure beneath the AB-Mats, & Lateral Movement of the AB-Mats	O&M Requirements Section 3.5.2	N/A	None	AB6-AB8, & AB17	OMRS Appendix H-1 (Cementitious Fill Material Perimeter Channels) Appendix H-2 (Cementitious Fill Material Interior Y-Channel)	O & M Requirements Section 3.5.2	N/A

A-1 Operations and Maintenance Requirements

Item No.	O&M Item	General Inspections[1 & 2]	Comprehensive Inspections[3]	Documentation/ Reporting	Repair[1]/Response Time /Maintenance	Manufacturer's Requirements	Calibrations	Warranties	Drawings	References	Repair Procedures	QA/QC
1.00					IRP Cap							
1.16	Geomembrane Liner Flaps	Visual / Twice a Month Verify that the Flap is Free of Penetrations/Tears/Thin Spots & Inspect the Tie-in to the AB Mat Blocks	Annually / Test Extruded Welds of the Flaps with the V-Box to Verify Seal with the IRP Cap Liner	Complete Provided Inspection/Repair Form	Geomembrane Liner Flap Repair / Within 4 Working Days or Prior to a Forecasted Rain Event, Whichever is Sooner Remove Accumulated Water / Within 24 hours or as Necessary to Prevent a H&S Concern or Potential Liner Damage	N/A	N/A	None	AB7 & AB18	OMRS Section 02270 - Geomembrane	O & M Requirements Section 3.5.3	N/A
1.17	Dead-Man Structures (South & North Inlets of Interior Y-Channel)	The Dead-Man Structures at the South & North Inlets of Interior Y-Channel are Covered by the Geomembrane Liner Flaps (Item 1.15). Upon Identification of Tears/Penetrations/Thin Spots, the Geomembrane Liner Flap shall be Opened to Inspect the Dead-man Structure: Verify the IRP Cap Liner Free of Tears/Penetrations/Thin Spots, Verify the Liner and Gasket Material are Securely Attached to the Dead-man Structure at the Batten Bar Strip (No Seepage Points), Verify Structure is free of Surface Spalling or Cracks >1/16 Inches, Check Integrity of Construction Joints, & Check for Void Spaces in the Cementitious Fill Material Allowing Water to Pool & Erosion of Adjacent Fill Material (See Item 1.15)		Complete Provided Inspection/Repair Form Evaluate Construction Joints, Surface Spalling and Cracks to Determine Required Repair	Ballooning & Remove Accumulated Water Within 24 Hours or as Necessary to Prevent a H&S Concern or Potential Liner Damage Damaged Battens (Including Liner) / Within 48 Hours Structure / 30 Days if Concrete Repairs are needed Upon Repair of Dead-Man, Repair/Re-install the Geomembrane Liner Flap	N/A	N/A	None	AB7 & AB18	OMRS Section 02270 - Geomembrane Section 03300 - Concrete	O&M Requirements Section 3.5.4.1	N/A
1.18	Dead-Man Structures (SE Channel Inlet)	Visual / Twice a Month Verify Liner is Free of Penetrations/Tears/Thin Spots	Visual / Semi-Annual Verify Liner and Gasket Material are Securely Attached to Dead-Man at the Batten Bar Strip (No Seepage Points) Visual / Annual Verify Structure is Free of Surface Spalling or Cracks >1/16 Inches, & Check Integrity of Construction Joints	Complete Provided Inspection/Repair Form Evaluate Construction Joints, Surface Spalling and Cracks to Determine Required Repair	Ballooning & Remove Accumulated Water Within 24 Hours or as Necessary to Prevent a H&S Concern or Potential Liner Damage Damaged Battens (Including Liner) / Within 48 Hours Structure / 30 Days if Concrete Repairs are needed	N/A	N/A	None	AB7 & AB18	OMRS Section 02270 - Geomembrane Section 03300 - Concrete	O & M Requirements Section 3.5.4.2	N/A
1.19	Northeast Corner Piping	Visual / Monthly Verify Integrity of Headwalls (See Item 1.05), Precast Concrete Manhole Covers (Securely Attached & Flush with the Ground Surface), & Check that Culverts are Free of Debris Allowing Free Flow of Water	Visual / Annual Interior Inspection of Precast Concrete Manholes & Culvert Piping to Verify Structure is Free of Debris and Obstructions & Manhole Steps are Secure If Suspected Pipe Failure/Collapse/ Interior Inspection of Piping to Check for Cave-ins, Pipe Roundness, & Debris or Obstructions	Complete Provided Inspection/Repair Form	Surface Damages to Manhole / Within 30 Days	N/A	N/A	None	AB8, AB32-AB33	OMRS Section 02300 - Earthwork Section 02270 - Geomembrane Section 02935 - Turf Section 03300 - Concrete	O & M Requirements Section 3.6	N/A
1.20	Former LSF Tanks Extensions (LSF Tanks 2, 3, & 4)	Visual / Monthly Verify No Penetrations/ Tears/Thin Spots at the Boot Transition & Note Any Signs of Liner Fatigue, Accumulated Water, Settlement, etc., at the Tank Extensions	Visual / Annual Verify Secure Fit with Riser Extension & Inspect for Signs of Deterioration (Tears/Penetrations/ Thin Spots)	Complete Provided Inspection/Repair Form	Liner Repair within 4 Working Days or Prior to a Forecasted Rain Event Whichever is Sooner Accumulated Water / Within 24 Hours or as Necessary to Prevent a H&S Concern or Potential Liner Damage Subsidence Repair / Within 60 Days or as Necessary to Maintain IRP Cap Elevations & Minimize Liner Fatigue, H&S Concerns, & Potential Water Infiltration	N/A	N/A	None	AB4, AB6, & AB41	OMRS Section 02270 - Geomembrane	O & M Requirements Section 3.7.1	N/A

A-1 Operations and Maintenance Requirements

Item No.	O&M Item	General Inspections[1 & 2]	Comprehensive Inspections[3]	Documentation/ Reporting	Repair[1]/Response Time /Maintenance	Manufacturer's Requirements	Calibrations	Warranties	Drawings	References	Repair Procedures	QA/QC
1.00					**IRP Cap**							
1.21	Former LSF Tank Extensions (LSF Tank 1)	Visual / Monthly Verify No Penetrations/ Tears/Thin Spots at the Boot Transition & Note Any Signs of Liner Fatigue, Accumulated Water, Settlement, etc., at the Tank Extensions Opening LSF Tank 1 Access and Vent Risers Shall be in Accordance with Commonwealth Procedures to Ensure the H&S of the Environment & Personnel	Visual / Annual Verify Secure Fit with Riser Extension & Inspect for Signs of Deterioration (Tears/Penetrations/ Thin Spots) Opening LSF Tank 1 Access and Vent Risers Shall be in Accordance with Commonwealth Procedures to Ensure the H&S of the Environment & Personnel	Complete Provided Inspection/Repair Form	Liner Repair within 4 Working Days or Prior to a Forecasted Rain Event Whichever is Sooner Accumulated Water / Within 24 Hours or as Necessary to Prevent a H&S Concern or Potential Liner Damage Subsidence Repair / Within 60 Days or as Necessary to Maintain IRP Cap Elevations & Minimize Liner Fatigue, H&S Concerns, & Potential Water Infiltration	N/A	N/A	None	AB4, AB6, & AB41	OMRS Section 02270 - Geomembrane	O & M Requirements Section 3.7.1	N/A
1.22	Former LSF Tank Cathodic Protection	Record Readings / Monthly Record Direct Current and Amps Output Readings from the Rectifier	Survey / Annual Survey Performed by a NACE Technician with Applicable Adjustments to the Individual Anode String Resistors and Rectifier Outputs	Complete Provided Inspection/Repair Form	OMRS Appendix E-5 Cathodic Protection Post Installation Survey Provided by Allied Corrosion Industries, Inc. Manufacturer's O&M Instructions	OMRS Appendix E-5 Cathodic Protection Post Installation Survey Provided by Allied Corrosion Industries, Inc.	OMRS Appendix E-5 Manufacturer's O&M Instructions	None	AB9 & AB41	OMRS Appendix E-5 Cathodic Protection Post Installation Survey Provided by Allied Corrosion Industries, Inc. Manufacturer's O&M Instructions	O & M Requirements Section 3.7.2 OMRS Appendix E-5 Manufacturer's O&M Instructions	N/A
2.00					**East Detention Basin (EDB)**							
2.01	Principal Spillway-Riser Pipe	Visual / Twice a Month Verify Riser Pipe is Free of Obstructions/Debris	Visual / Annual Verify Riser Pipe is Firmly Secure & Attached to the Foundation	Complete Provided Inspection/Repair Form Record Debris/ Obstruction Removal	Obstruction/Debris Removal / Prior to a Forecasted Rain Event or Within 24 Hours Structure / Within 14 Days	O & M Requirements Section 4.1.1	N/A	None	AB19 & AB20	OMRS Section 02300 - Earthwork Section 02725 - Principal Spillway Flow Measurement (EDB) Section 03200 - Concrete Reinforcement Section 03300 - Concrete	O & M Requirements Section 4.1.1	N/A
2.02	Principal Spillway-H-Flume	Visual / Twice a Month Verify H-Flume is Free of Obstructions/Debris, Silt or Sediment	Visual / Annual Verify H-Flume has Maintained Structural Integrity & Free of Surface Spalling or Cracks >1/16 Inches, & Inspect Integrity of Construction Joints	Complete Provided Inspection/Repair Form Record Debris/ Obstruction Removal Evaluate Construction Joints, Surface Spalling, and Cracks to Determine Required Repair	Obstruction/Debris & Silt or Sediment Removal / Within 24 Hours or as Necessary to Prevent Flow Obstruction Structure / Within 30 Days if Concrete Repairs are needed	O&M Requirements Section 4.1.2	N/A	O&M Requirements Section 4.1.2	AB19-AB22	PSVP Section 2.4 - EDB Discharge Flow Monitoring OMRS Section 02300 - Earthwork Section 02725 - Principal Spillway Flow Measurement Section 03100 - Structural Concrete Formwork Section 03200 - Concrete Reinforcement Section 03300 - Concrete	O & M Requirements Section 4.1.2	N/A
2.03	Principal Spillway-Ultrasonic Flow Recorder and Rain Gauge	Visual / Weekly Check to See if Rain Gauge is Not Plugged Visual / Monthly Verify Proper Operation Versus Staff Gauge & Calibrate as Needed	Visual / Annual Verify Flow Meter & Rain Gauge are Structurally Sound	Complete Provided Inspection/Repair Form	Rain Gauge Plug/Accumulated Dust Removal / Prior to next Forecasted Rain Event Flow Meter Calibration / Within 24 Hours Flow Meter Repair or Replacement / Within 60 Days	O&M Requirements Section 4.1.3	O&M Requirements Section 4.1.3	None	AB9 & AB19-AB21	PSVP Section 2.4 - EDB Discharge Flow Monitoring OMRS Section 02725 - Principal Spillway Flow Measurement	O & M Requirements Section 4.1.3	PSVP Section 2.4
2.04	Principal Spillway-Riprap	Visual / Monthly Verify Integrity, Free of Debris, No Silt or Sediment Accumulation > 3 Inches, & Geotextile Fabric Not Damaged (if exposed)	Visual / Annual Check for Minimum 1' Riprap Depth & Verify Free of Brush Growth	Complete Provided Inspection/Repair Form Record Brush Growth or Debris Removal	Brush Growth or Debris Removal / Within 14 Days Silt/Sediment Removal / Within 30 Days Riprap Replacement / Within 30 Days Eliminate Weeds or Woody Vegetation >1" dia. to Minimize Damage to Under Lying Geosynthetics & to Prevent Flow Reduction	N/A	N/A	None	AB19 & AB20	OMRS Section 02271 - Rip-rap Section 02420 - Storm Water, Erosion, & Sediment Control Specification 02275 - Geotextile & Composite Drainage Net	O&M Requirements Section 4.1.4	N/A

A-1 Operations and Maintenance Requirements

Item No.	O&M Item	General Inspections[1 & 2]	Comprehensive Inspections[3]	Documentation/ Reporting	Repair[1]/Response Time /Maintenance	Manufacturer's Requirements	Calibrations	Warranties	Drawings	References	Repair Procedures	QA/QC
2.00	East Detention Basin (EDB)											
2.05	Emergency Spillway-Concrete Pad	Visual / Twice a Month Verify Free of Debris/Obstructions	Visual / Annual Check Concrete Pad for Surface Spalling or Cracks >1/16 Inches & Inspect Integrity of Construction Joints	Complete Provided Inspection/Repair Form Evaluate Construction Joints, Surface Spalling, & Cracks to Determine Required Repairs	Obstruction/Debris Removal / Within 24 hours Structure within 30 Days if Concrete Repairs are Needed	N/A	N/A	None	AB19 & AB20	OMRS Section 03200 - Concrete Reinforcement Section 03300 - Concrete	O&M Requirements Section 4.2.1	N/A
2.06	Emergency Spillway-Gabion Basket System	Visual / Monthly Verify Integrity of Gabion Baskets & Free of Debris	Visual / Annual Verify Free of Brush Growth & Check for Signs of Rust which may Adversely Affect Performance of Flow Velocities	Complete Provided Inspection/Repair Form Record Brush Growth or Debris Removal	Brush Growth or Debris Removal / Within 14 Days Rust Prevention Spray Product / As Needed & Noted on the Inspection Checklist Eliminate Weeds or Woody Vegetation >1" dia. to Minimize Damage to Under Lying Geosynthetics & to Prevent Flow Reduction	O&M Requirements Section 4.2.2	N/A	None	AB19	OMRS Section 02420 - Storm Water, Erosion, & Sediment Controls	O&M Requirements Section 4.2.2	N/A
2.07	Embankment	Visual / Monthly Verify Free of Debris Along the Side-slopes, No Erosion Gullies, & No Eroded Areas	Visual / Annual Check for Maintained Side-Slopes & Verify Free of Brush Growth	Complete Provided Inspection/Repair Form Record Brush Growth /Debris Removal	Addition of Soil Amendments / As Required to Maintain Vegetative Growth & to Minimize Erosion Side-slope Turf Maintenance / Within 7 Days Brush Growth/Debris Removal / Within 14 Days Weed Control / As Required Mow Vegetation / Maximum Height Not >24 Inches or Other Height as Appropriate for Utilized Seed Mix	N/A	N/A	None	AB19 & AB20 O&M Figure 7-4	OMRS Section 02300 - Earthwork Section 02420 - Storm Water, Erosion, & Sediment Controls Section 02935 - Turf	O&M Requirements Section 4.3	N/A
2.08	EDB - Riprap	Visual / Monthly Verify Integrity, Free of Debris, No Silt or Sediment Accumulation >3 Inches, & Geomembrane Liner at the Inlet and/or Geotextile Fabric are not Damaged (if exposed)	Visual / Annual Check for Minimum 1' Riprap Depth & Verify Free of Brush Growth	Complete Provided Inspection/Repair Form Record Brush Growth or Debris Silt Removal	Brush Growth or Debris Removal / Within 14 Days Silt/Sediment Removal / Within 30 Days Riprap Replacement / Within 30 Days Eliminate Weeds or Woody Vegetation >1" dia. to Minimize Damage to Under Lying Geosynthetics & to Prevent Flow Reduction	N/A	N/A	None	AB7 & AB19-AB20	OMRS Section 02271 - Rip-rap Section 02420 - Storm Water, Erosion, & Sediment Control Specification 02275 - Geotextile & Composite Drainage Net	O&M Requirements Section 4.4.1	N/A
2.09	EDB - Gabion Basket System	Visual / Monthly Verify Integrity of Gabion Baskets & Free of Debris	Visual / Annual Verify Free of Brush Growth & Check for Signs of Rust which may Adversely Affect Performance of Flow Velocities	Complete Provided Inspection/Repair Form Record Brush Growth or Debris Removal	Brush Growth or Debris Removal / Within 14 Days Rust Prevention Spray Product / As Needed & Noted on the Inspection Checklist Eliminate Weeds or Woody Vegetation >1" dia. to Minimize Damage to Under Lying Geosynthetics & to Prevent Flow Reduction	O&M Requirements Section 4.4.2	N/A	None	AB7 & AB19	OMRS Section 02420 - Storm Water, Erosion, & Sediment Controls	O&M Requirements Section 4.4.2	N/A
2.10	EDB - Y-Channel Outfall Structure	Visual / Twice a Month Verify Concrete Channel & Stilling Basin are Free of Obstructions & that the 1" Dia. Weep Holes are Free of Obstructions	Visual / Annual Verify No Surface Spalling or Cracks >1/16 Inches & Check Integrity of Construction Joints	Complete Provided Inspection/Repair Form Record Debris/ Obstruction Removal Evaluate Construction Joints, Surface Spalling, & Cracks to Determine Required Repair	Obstruction Removal / Within 24 Hours or as Necessary to Prevent Flow Obstruction Structure / Within 30 Days if Concrete Repairs are needed	N/A	N/A	None	AB7, AB19, & AB23 - AB25	OMRS Appendix H-3 Section 02270 - Geomembrane Section 03100 - Concrete Formwork Section 03200 - Concrete Reinforcement Section 03300 - Concrete	O & M Requirements Section 4.4.3.1	N/A

A-1 Operations and Maintenance Requirements

Item No.	O&M Item	General Inspections[1 & 2]	Comprehensive Inspections[3]	Documentation/ Reporting	Repair[1]/Response Time /Maintenance	Manufacturer's Requirements	Calibrations	Warranties	Drawings	References	Repair Procedures	QA/QC
2.00	**East Detention Basin (EDB)**											
2.11	EDB - Y-Channel Outfall Structure Geomembrane Liner Flap	Visual / Twice a Month Verify that the Flap is Free of Penetrations/Tears/Thin Spots, & Inspect the Connection to the Concrete Channel	Annually / Test Extruded Welds of the Flaps with the V-Box	Complete Provided Inspection/Repair Form	Geomembrane Liner Flap, Repair / Within 4 Working Days or Prior to a Forecasted Rain Event, Whichever is Sooner Remove Accumulated Water / Within 24 hours or as Necessary to Prevent a H&S Concern or Potential Liner Damage	N/A	N/A	None	AB23 - AB25	OMRS Section 02270 - Geomembrane	O & M Requirements Section 4.4.3.2	N/A
2.12	EDB - Y-Channel Outfall Structure Battens	Visual / Twice a Month Verify Liner at the Batten Bar is Free of Penetrations/Tears/Thin Spots	Visual / Semi-Annual Verify Liner and Gasket Material are Securely Attached to Headwall at the Batten Bar Strip with No Seepage Points	Complete Provided Inspection/Repair Form	within 48 Hours	N/A	N/A	None	AB23 - AB25	OMRS Section 02270 - Geomembrane	O & M Requirements Section 4.4.3.3	N/A
3.00	**Drainage Channels Outside IRP Cap**											
3.01	East Main Drainage Channel	N/A	Visual / Semi-Annual Check for Fallen Timber, Brush or Debris & Verify Maintained Side-Slopes	Complete Provided Inspection/Repair Form	Water Dammed / Obstructions Removed Within 24 Hours or as Necessary to Prevent Flow Obstruction Water Diverted / Obstructions Removed Within 14 Days	N/A	N/A	None	AB37 & AB38	OMRS Section 02420 - Storm Water, Erosion, & Sediment Controls	O & M Requirements Section 5.1 & Section 7.6	N/A
3.02	South Drain Inlet Area - Headwalls	Visual / Twice a Month Verify Openings are Free of all Obstructions	Visual / Annual Verify Construction Joints Maintained & Structure is Free of Surface Spalling or Cracks >1/16 Inches	Complete Provided Inspection/Repair Form Evaluate Construction Joints, Surface Spalling, & Cracks to Determine Required Repairs	Obstruction Removal / Within 24 Hours or as Necessary to Prevent Flow Obstruction Structure / Within 30 Days if Concrete Repairs are needed	N/A	N/A	None	AB5	OMRS Section 03300 - Concrete	O & M Requirements Section 5.2.1	N/A
3.03	South Drain Inlet Area - Riprap	Visual / Monthly Verify Integrity & Free of Debris	Visual / Annual Check for Minimum 1' Riprap Depth & Verify Free of Brush Growth	Complete Provided Inspection/Repair Form Record Brush Growth or Debris Removal	Brush Growth or Debris Removal / Within 14 Days Riprap Replacement / Within 30 Days Eliminate Weeds or Woody Vegetation >1" dia. to Minimize Damage to Under Lying Geosynthetics & to Prevent Flow Reduction	N/A	N/A	None	AB5	OMRS Section 02271 - Rip-rap Section 02420 - Storm Water, Erosion, & Sediment Control	O&M Requirements Section 5.2.2	N/A
3.04	South Drain Inlet Area - Gabion Basket System	Visual / Monthly Verify Integrity of Gabion Baskets & Free of Debris	Visual / Annual Check for Brush Growth & for Signs of Rust which may Adversely Affect Performance in Reduction of Flow Velocities	Complete Provided Inspection/Repair Form Record Brush Growth or Debris Removal	Brush Growth or Debris Removal / Within 14 Days Rust Prevention Spray Product / As Needed & Noted on the Inspection Checklist Eliminate Weeds or Woody Vegetation >1" dia. to Minimize Damage to Under Lying Geosynthetics & to Prevent Flow Reduction	O&M Requirements Section 5.2.3	N/A	None	AB5	OMRS Section 02420 - Storm Water, Erosion, & Sediment Controls	O&M Requirements Section 5.2.3	N/A
4.00	**Southeast Cap**											
4.01	SE Cap / Geomembrane Liner	Visual / Monthly If Exposed, Verify Liner is Free of Penetrations/Tears/Thin Spots	See Items 4.02 through 4.04	Complete Provided Inspection/Repair Form	Within 4 working Days or Prior to a Forecasted Rain Event Whichever is Sooner	AGRU/AMERICA O&M Requirements Section 6.1	N/A	O & M Requirements Section 6.1	AB4, AB7, & AB36	OMRS Section 02270 - Geomembrane	O & M Requirements Section 6.1	RWDS Section 02270 - Geomembrane
4.02	SE Cap / Turf	Visual / Monthly Check for Signs of Animal Burrowing, Verify No Eroded Areas, & No Erosion Gullies	N/A	Complete Provided Inspection/Repair Form	Turf / Within 7 Days Addition of Soil Amendments / As required to Maintain Vegetative Growth and Minimize Erosion Mow Vegetation / Maximum Height Not >24 Inches or Other Height as Appropriate for Utilized Seed Mix Weed Control / As Required	O&M Requirements Section 6.2	N/A	None	AB36 O&M Figure 7-4	OMRS Section 02300 - Earthwork Section 02420 - Storm Water, Erosion, & Sediment Controls Section 02935 - Turf	O & M Requirements Section 6.2	N/A

A-1 Operations and Maintenance Requirements

Item No.	O&M Item	General Inspections[1 & 2]	Comprehensive Inspections[3]	Documentation/ Reporting	Repair[1]/Response Time /Maintenance	Manufacturer's Requirements	Calibrations	Warranties	Drawings	References	Repair Procedures	QA/QC
4.00	**Southeast Cap**											
4.03	SE Cap / Riprap Outlet	Visual / Monthly Check Integrity of Riprap, Verify Free of Debris, & Composite Drainage Net Not Damaged (if exposed)	Visual / Annual Check for Maintained Side-slopes & Verify Free of Brush Growth	Complete Provided Inspection/Repair Form Record Brush Growth or Debris Removal	Brush Growth or Debris Removal / Within 14 Days Riprap Replacement / Within 30 Days Eliminate Weeds or Woody Vegetation >1" dia. to Minimize Damage to Under Lying Geosynthetics & to Prevent Flow Reduction	N/A	N/A	None	AB36	OMRS Section 02271 - Rip-rap Section 02420 - Storm Water, Erosion, & Sediment Controls	O & M Requirements Section 6.3	N/A
4.04	SE Cap Tie-in	Visual / Monthly Check for Liner Pullout	Visual / Annual Check Integrity of Cap Transition (Anchoring of Liner in Trenches)	Complete Provided Inspection/Repair Form	Within 7 Days	N/A	N/A	None	AB36	OMRS Section 02270 - Geomembrane Section 02275 - Geotextile and Composite Drainage Net Section 02300 - Earthwork	O & M Requirements Section 6.4	N/A
5.00	**General Site Components**											
5.01	Roadways	Visual / Monthly Check for Potholes/Rutting/Stone Washout	Visual / Semi-Annual Verify Road Surface & Side-Slopes Are Maintained	Complete Provided Inspection/Repair Form	Site Perimeter Roadway / Within 7 Days Site Access Roadway / Within 30 Days	N/A	N/A	None	AB4-AB8 & AB44	OMRS Section 02208 - Site Roadways Section 02300 - Earthwork	O & M Requirements Section 7.1	N/A
5.02	Security	Visual / Daily Verify Gates & Latches Work Properly, Tension Wire is Tightly Strung, Fencing is Grounded, & Inspect for Signs of Rust & Breach by Animals or Trespassers, & Check that the Traffic Control Gates at the EDB Emergency Spillway are Operational Pursuant to Commonwealth Security & H&S Procedures	Visual / Semi-Annual Verify Steel Posts/ Concrete Footers are Structurally Sound, Integrity of Fence & "Restricted Access Area" Signs are Properly Posted	Complete Provided Inspection/Repair Form	Temporary Measures Immediately Proceed with Permanent Measures to Insure MFDS Security Spray an Oil Product on the Hinges / Monthly Rust Prevention Spray Product on Perimeter Fence and Traffic Control Gates / As Needed & Noted on the Inspection Checklist	O & M Requirements Section 7.2	N/A	None	AB4-AB8 & AB44	OMRS Section 02831 - Chain Link Fences Section 16370 - Electrical Distribution System, Area Section 16375 - Electrical Distribution System (Low Voltage)	O & M Requirements Section 7.2	N/A
5.03	Alluvial Wells	Visual / Quarterly Verify Pad-locks & Steel Caps are Secure	Visual / Semi-Annual Verify Integrity of the Steel Casings (Operable Locks & Caps) & Concrete Pads are Free of Surface Damages, Wells are Free of Silt/Debris (Measure Total Casing Depth of Each Well), & Integrity of Bollards (Structurally Sound & Protecting the Alluvial Well from Damage)	Complete Provided Inspection/Repair Form	Prior to Next Sampling Event	N/A	N/A	None	AB15 OMRS Section 02671 Figures 02671-1, 02671-2A, & 02671-2B	PSVP Section 3.0 - Scope of Containment Monitoring OMRS Section 02671 - Well Installation	O&M Requirements Section 7.3	PSVP Section 3.0
5.04	Monitoring Wells	Visual / Quarterly Verify Pad-locks & Steel Caps are Secure	Visual / Semi-Annual Verify Integrity of the Steel Casings (Operable Locks & Caps), & Concrete Pads are Free of Surface Damages, & Wells are Free of Silt/Debris (Measure Total Casing Depth of Each Well)	Complete Provided Inspection/Repair Form	Prior to Next Sampling Event	N/A	N/A	None	AB12 OMRS Section 02671 Figures 02671-1, 02671-2A, & 02671-2B	PSVP Section 2.3.1 - Data Collection and Evaluation OMRS Section 02671 - Well Installation	O&M Requirements Section 7.4	PSVP Section 2.3.1
5.05	Samplers	N/A	Visual / Monthly Verify Portable Samplers are Structurally Sound & Located according to Figures 7-1 & 7-2	Complete Provided Inspection/Repair Form	Sampler Repair / Replacement / As Soon as Practicable If Location is Critical for Sampling / Temporarily Replace Sampler with One from Less Critical Location	O&M Requirements Section 7.5	O&M Requirements Section 7.5	None	O&M Figure 7-1 & 7-2	PSVP Section 3.0 - Scope of Contaminant Monitoring	O&M Requirements Section 7.5	PSVP Section 3.0
5.06	Erosion Monitoring - East Main Drainage Channel	N/A	Visual / Semi-Annual Identify Erosive Conditions, Verify Monuments are Undisturbed & Structurally Sound, Check That Brass Discs are Grouted & Coordinates are Clearly Marked	Complete Provided Inspection/Repair Form Documentation per PSVP Section 2.1 - Erosion Monitoring	Monuments/Prior to Next Monitoring Event	N/A	N/A	None	AB38-AB40 O&M Figure 7-3	PSVP Section 2.1 - Erosion Monitoring OMRS Section 02231 - Clearing & Grubbing Section 02271 - Riprap Section 02420 - Storm Water Erosion, & Sediment Controls Section 03300 - Concrete	O&M Requirements Section 7.6.1	PSVP Section 2.1

A-1 Operations and Maintenance Requirements

Item No.	O&M Item	General Inspections[1 & 2]	Comprehensive Inspections[3]	Documentation/ Reporting	Repair[1]/Response Time /Maintenance	Manufacturer's Requirements	Calibrations	Warranties	Drawings	References	Repair Procedures	QA/QC
5.00	General Site Components											
5.07	Erosion Monitoring - South and West Drainage Channels	N/A	Visual / Semi-Annual Identify Erosive Conditions	Complete Provided Inspection Documentation per PSVP Section 2.1 - Erosion Monitoring	Erosion Control Implementation / Pursuant to PSVP, Section 2.1	N/A	N/A	None	N/A	PSVP Section 2.1 - Erosion Monitoring OMRS Section 02231 - Clearing & Grubbing Section 02271 - Riprap Section 02420 - Storm Water Erosion, & Sediment Controls	O&M Requirements Section 7.6.2	PSVP Section 2.1
5.08	Erosion Monitoring - Adjacent Hill Slopes	N/A	Visual / Semi-Annual Identify Erosive Conditions	Complete Provided Inspection Documentation per PSVP Section 2.1 - Erosion Monitoring	Erosion Control Implementation / Pursuant to PSVP, Section 2.1	N/A	N/A	None	N/A	PSVP Section 2.1 - Erosion Monitoring	O&M Requirements Section 7.6.3	PSVP Section 2.1
5.09	MFDS Liquids	Visual/Monthly Check for Accumulated Liquids (see Note 5)	NA	Complete Provided Inspection/Repair Form If above "Free Release Limits" Documentation per PSVP	Pursuant to the Statement of Work	N/A	N/A	None	N/A	PSVP Section 2.3.1 - Data Collection and Evaluation Statement of Work Section III A.2 - Remedy Record of Decision Section 10.2 - Interim Maintenance Period	O&M Requirements Section 7.7 and Subsections (Sections 7.7.1, 7.7.2, & 7.7.2.1)	O&M Requirements Section 7.7
5.10	Survey Tower	Visual / Quarterly Inspect for Signs of Termite Infestation, Loose Boards, & Verify Ladder is Securely Attached to Tower	Visual / Annual Inspect Concrete Footers for Surface Damages & Check Tower for Structural Stability	Complete Provided Inspection/Repair Form	Within 30 days or Prior to Utilizing Tower, Whichever is Sooner Coat with a Water Seal Product as Directed by Manufacturer	N/A	N/A	None	AB4 & AB7	None	O&M Requirements Section 7.8	N/A
5.11	Miscellaneous Turf Areas	Visual / Monthly Verify No Erosion Gullies, No Debris Along Side-slopes, & No Eroded Areas	Visual / Annual Check for Maintained Side-Slopes	Complete Provided Inspection/Repair Form	Turf / Within 7 Days Addition of Soil Amendments / As Required to maintain Vegetative Growth & Minimize Erosion Mow Vegetation / Maximum Height Not >24 Inches or Other Height as Appropriate for Utilized Seed Mix Weed Control / As Required	O&M Requirements Section 7.9	N/A	None	AB36 O&M Figure 7-4	OMRS Section 02300 - Earthwork Section 02420 - Storm Water, Erosion, & Sediment Controls Section 02935 - Turf	O & M Requirements Section 7.9	N/A

1. **In addition to the general inspection frequency, additional inspections will follow severe weather conditions. General inspection for O&M items shall be at a minimum what is specified. However, an inspection following a severe weather event may count as part of the daily, twice-a-month, quarterly, or monthly general inspections.**
2. **General inspections consist of site walks over the IRP Cap and along the perimeter of MFDS, outside the IRP Cap area, identifying site components which are in need of repair. "General" inspections utilize visual inspections to identify areas in need of repair.**
3. **Comprehensive inspections shall encompass the general inspections items along with the additional items, identifying and site components which are in need of repair.**
4. **During inspections, if a repair item is determined and repairs cannot be made within the specified response time, DOCUMENT reason. Make repair ASAP and DOCUMENT completion date.**
5. **Accumulated liquid from collection sumps at headwalls, subsided areas, areas with ballooned liner, sump extensions, tank extension in the Former LSF area, or in trench areas shall be pumped and disposed by Commonwealth in accordance with the Consent Decree, Statement of Work, and Record of Decision as detailed in O&M Requirements, Section 7.7 - MFDS Liquids.**

Acronyms:

As-Built Drawing	AB
As Soon As Possible	ASAP
Commonwealth of Kentucky	Commonwealth
Design Analysis Report	DAR
Environmental Protection Agency	EPA
Health and Safety	H&S
Initial Remedial Phase	IRP
Maxey Flats Disposal Site	MFDS
Not Applicable	N/A
Operating Committee	Committee
Operations and Maintenance	O & M
Operation & Maintenance Requirement Summary	OMRS
Performance Standards Verification Plan	PSVP
Stainless Steel	SS

A-2 – Inspection Frequency Matrix

A-2 Inspection Frequency Matrix

O&M Section No.	O&M Item	General Inspections[1]			Comprehensive Inspections[2]		
		Frequency	Type	Inspection	Frequency	Type	Inspection
				IRP CAP			
3.1.1	Geomembrane Liner	Monthly*	Visual	Verify Liner is Free of Penetrations/Tears/Thin Spots & Check for Soft Spots, or Wet Areas	Annual	Check the Liner Seams	Check Exposed & Accessible Field Seams With Airlance Test & Check Factory Seams For Tears/Penetrations/Thin Spots
3.1.2	Geomembrane Liner Boots	Monthly*	Visual	Verify No Penetrations/ Tears/Thin Spots & Note any Signs of Liner Fatigue, Accumulated Water, Settlement, etc., at the Sump Extension	Annual	Visual	Verify Secure Fit with Sump Extension & Check for Signs of Deterioration (Tears/Penetrations/Thin Spots)
3.1.3	Extended Sumps	Monthly*	Visual	Check that the Transition is Free of Penetrations/Tears/ Thin Spots, Verify Integrity of Sump & Geomembrane Liner Boot	---	---	---
3.1.3	Data Loggers	Monthly*	Visual	Verify Integrity of Sump Lid/Data Logger System	Quarterly Annual	Data Loggers Hand Measurements in Dry Sumps	Verify Data Logger is Secure & Operates Properly Verify Data Logger Measurement
3.2.1	Headwall Structures	Twice-a-month*	Visual	Verify Openings are Free of Debris, Obstructions or Silt/Sediment & Check for Liner Ballooning at Battens	Annual	Visual	Verify No Surface Spalling or Cracks >1/16 inches, Check Integrity of Construction Joints, & Check Trash Grate/Restricting Plate for Seal to Headwall, & Verify No Seepage Points along Batten Bar Strip
3.2.2	Headwall Battens	Twice-a-month*	Visual	Verify Liner at the Batten Bar is Free of Penetrations/Tears/Thin Spots	Semi-Annual	Visual	Verify Liner and Gasket Material are Securely Attached to Headwall at the Batten Bar Strip (No Seepage Points)
3.2.3	Collection Sump at the Headwall	Twice-a-month*	Visual	Check that the Transition is Free of Penetrations/Tears/ Thin Spots along the Sump Piping & Verify Integrity of Sump Lid	Annual	Visual	Verify Connection with Geomembrane Liner (Geomembrane Liner Boot)
3.3.1	Permanent Site Control Monuments	---	---	---	Annual	Visual	Verify Concrete Pads & Steel Casings are Free of Surface Damages, Brass Disc is Grouted, Coordinates are Clearly Marked, & that the Structure has not been Disturbed
3.3.2	Control Points	---	---	---	Annual	Visual	Verify Control Points are Clearly Marked
3.3.3	Subsidence Monitoring	Monthly*	Visual	Document Areas of Water Collection & Change in Subsiding Areas	Annual	Topographic Survey	Verify Grades have Positive Drainage & Document Areas of Subsidence Repairs
3.4.1	Drainage Channels	Twice-a-month*	Visual	Verify Liner is Free of Penetrations/Tears/Thin Spots, Geotextile Fabric Free of Damages (If Exposed), Channels are Free of Leaves or Debris Impeding Flow, & Check for Soft Spots or Wet Areas	Annual	Visual & Check the Liner Seams	Check Exposed & Accessible Field Seams With Airlance Test & Check Factory Seams For Tears/Penetrations/Thin Spots
3.4.2	Diversion Berms	Twice-a-month*	Visual	Verify Liner is Free of Penetrations/Tears/Thin Spots, Geotextile Fabric Free of Damages (If Exposed), & Check for Soft Spots or Wet Areas	Annual	Visual & Check the Liner Seams	Check Exposed & Accessible Field Seams With Airlance Test & Check Factory Seams For Tears/Penetrations/Thin Spots

A-2 Inspection Frequency Matrix

O&M Section No.	O&M Item	General Inspections[1]			Comprehensive Inspections[2]		
		Frequency	Type	Inspection	Frequency	Type	Inspection
				IRP CAP			
3.4.3	Anchor Trenches	Monthly*	Visual	Check Integrity of Anchor Trenches (Liner Pull-Out, Tear/ Penetrations/Thin Spots), Verify the Integrity of the Underlying Materials (if Exposed), & Check for Soft Spots or Wet Areas	Annual	Visual and Check the Liner Seams	Check Exposed & Accessible Field Seams With Airlance Test & Check Factory Seams For Tears/Penetrations/Thin Spots
3.5.1	AB Mats	Monthly	Visual	Check for Broken Concrete Blocks, Free of Vegetative Growth, Impeding Flow, Tears/Penetrations/Thin Spots in Liner (Section 3.1.1), & Verify that the AB-Mats have 3 Clamps on the Long Side & 1 Clamp on the Short Side Connecting to Adjacent AB Mat	Semi-Annual	Visual	Along the SE Channel Verify that the Geomembrane Liner beneath the Encased SS cables is Free of Tears/Penetrations/Thin Spots & Check for Worn Areas, Cracking, & Penetrations in the Plastic Tubing Check that the Anchorage at the North & East Upstream Headwalls is Intact and Preventing Lateral Movement
3.5.2	Cementitious Fill Material	Monthly	Visual	Check and Note Concrete Spalling or Void Spaces Allowing Water to Pool or Erosion of Adjacent Fill Material	----	----	----
3.5.3	Geomembrane Liner Flaps	Twice-a-month*	Visual	Verify that the Flap is Free of Penetrations/ Tears/Thin Spots, Check for Ballooning of the Liner, and Verify the Tie-in to the AB Mat Blocks	Annual	Check the Extruded Liner Seams	V-Box Test the Flap Extruded Liner Seams to Verify Seal with the IRP Cap Liner
3.5.4.1	Dead-Man Structures (South & North Inlets of Interior Y-Channel)	The Dead-Man Structures at the South & North Inlets of Interior Y-Channel are Covered by the Geomembrane Liner Flaps (Section 3.5.2). Upon Identification of Tears / Penetrations / Thin Spots, the Geomembrane Liner Flap shall be Opened to Inspect the Dead-man Structure: Verify the IRP Cap Liner Free of Tears / Penetrations / Thin Spots, Verify the Liner and Gasket Material are Securely Attached to the Dead-man Structure at the Batten Bar Strip (No Seepage Points), Verify Structure is Free of Surface Spalling or Cracks >1/16 Inches, Check Integrity of Construction Joints, & Check for Void Spaces in the Cementitious Fill Material Allowing Water to Pool & Erosion of Adjacent Fill Material (See Section 3.5.2) Upon Repair, Repair / Reinstall the Geomembrane Liner Flap (Section 3.5.3.1).						
3.5.4.2	Dead-Man Structures (SE Channel Inlet)	Twice-a-month*	Visual	Check for Liner, Verify Liner is Free of Tears/ Penetrations/Thin Spots	Semi-Annual Annual	Visual Visual	Verify Liner and Gasket Material are Securely Attached to Headwall at the Batten Bar Strip (No Seepage Points) Check for Surface Spalling or Cracks >1/16 Inches, & Inspect Integrity of Construction Joints
3.6	Northeast Corner Piping	Monthly*	Visual	Verify Integrity of Headwalls (Section 3.2.1), Manhole Covers Securely Attached and Flush With Ground Surface, & Culverts are Free of Debris Allowing Free Flow of Water	Annual	Visual of Precast Concrete Manholes & Culvert Piping If Pipe Damage is Suspected	Check for Debris / Obstructions in the Precast Concrete Manholes & Integrity of Manhole Steps Check for Debris/Obstructions, Cave-ins, and Roundness of Pipe in the Culvert Piping
3.7.1	Former LSF Tank Extensions (LSF Tanks 2, 3, & 4)	Monthly*	Visual	Verify No Penetrations/ Tears/Thin Spots in the Boot Transition & Note Any Signs of Liner Fatigue, Accumulated Water, Settlement, etc., at the Tank Extensions	Annual	Visual	Verify Secure Fit with Riser Extension & Inspect for Signs of Deterioration (Tears/Penetrations /Thin Spots)

A-2 Inspection Frequency Matrix

O&M Section No.	O&M Item	General Inspections[1]			Comprehensive Inspections[2]		
		Frequency	Type	Inspection	Frequency	Type	Inspection
				IRP CAP			
3.7.1	Former LSF Tank Extensions (LSF Tank 1)	Monthly*	Visual	Verify No Penetrations/ Tears/Thin Spots in the Boot Transition & Note Any Signs of Liner Fatigue, Accumulated Water, Settlement, etc., at the Tank Extensions Opening LSF Tank 1 Access and Vent Risers Shall be in Accordance with Commonwealth Procedures to Ensure the H&S of the Environment & Personnel	Annual	Visual	Verify Secure Fit with Riser Extension & Inspect for Signs of Deterioration (Tears/Penetrations /Thin Spots) Opening LSF Tank 1 Access and Vent Risers Shall be in Accordance with Commonwealth Procedures to Ensure the H&S of the Environment & Personnel
3.7.2	Former LSF Tank Cathodic Protection	Monthly	Record Readings	Record Direct Current and Amps Output Readings from the Rectifier	Annual	Survey	Survey Performed by a NACE Technician with Applicable Adjustments to the Individual Anode String Resistors and Rectifier Outputs
				EDB			
4.1.1	Principal Spillway - Riser Pipe	Twice-a-month*	Visual	Verify Riser Pipe is Free of Obstructions/Debris	Annual	Visual	Verify Riser Pipe is Firmly Secure & Attached to the Foundation
4.1.2	Principal Spillway - H-Flume	Twice-a-month*	Visual	Verify H-Flume is Free of Debris/Obstructions & Silt or Sediment	Annual	Visual	Verify H-Flume has Maintained Structural Integrity, Check for Surface Spalling or Cracks >1/16 Inches, & Inspect Integrity of Construction Joints
4.1.3	Principal Spillway - Ultrasonic Flow Recorder & Rain Gauge	Weekly Monthly*	Visual Visual	Verify Rain Gauge is not Plugged Verify Proper Operation Versus Staff Gauge & Calibrate if Needed	Annual	Visual	Verify Flow Meter and Rain Gauge Are Structurally Sound
4.1.4	Principal Spillway - Riprap	Monthly*	Visual	Verify Integrity & Free of Debris, No Silt or Sediment Accumulation > 3 Inches, & Geotextile Fabric Not Damaged (if exposed)	Annual	Visual	Verify Integrity, Free of Brush Growth, & Check Minimum Riprap 1' Depth
4.2.1	Emergency Spillway - Concrete Pad	Twice-a-month	Visual	Verify Free of Debris/Obstructions	Annual	Visual	Check Concrete Pad for Surface Spalling or Cracks >1/16 Inches & Inspect Integrity of Construction Joints
4.2.2	Emergency Spillway - Gabion Basket System	Monthly*	Visual	Verify Integrity & Free of Debris	Annual	Visual	Verify Free of Brush Growth & Check for Signs of Rust
4.3	Embankment	Monthly	Visual	Verify Free of Debris Along Side-slopes, No Erosion Gullies, & No Eroded Areas	Annual	Visual	Check for Maintained Side-Slopes & Verify Free of Brush Growth
4.4.1	EDB - Riprap	Monthly*	Visual	Verify Integrity & Free of Debris, No Silt or Sediment Accumulation >3 Inches, & Geomembrane Liner at the Inlet &/or Geotextile Fabric Not Damaged (if exposed)	Annual	Visual	Verify Free of Brush Growth & Check Minimum 1' Depth
4.4.2	EDB - Gabion Basket System	Monthly*	Visual	Verify Integrity & Free of Brush Debris	Annual	Visual	Verify Free of Brush Growth & Check for Signs of Rust
4.4.3.1	EDB - Y-Channel Outfall Structure	Twice-a-month*	Visual	Verify Concrete Channel & Stilling Basin are Free of Obstructions & that the 1" Diameter Weep Holes are Free of Obstructions	Annual	Visual	Verify No Surface Spalling or Cracks >1/16 Inches & Check Integrity of Construction Joints
4.4.3.2	EDB - Y-Channel Outfall Structure Geomembrane Liner Flap	Twice-a-month*	Visual	Verify that the Flap is Free of Penetrations/ Tears/Thin Spots, Check for Ballooning of the Liner, and Inspect Connection to the Concrete Channel	Annual	Check Extruded Liner Seams	V-Box Test the Flap Extruded Liner Seams
4.4.3.3	EDB - Y-Channel Outfall Structure Battens	Twice-a-month*	Visual	Verify Liner at the Batten Bar is Free of Penetrations/Tears/Thin Spots	Semi-Annual	Visual	Verify Liner and Gasket Material are Securely Attached to the Concrete Channel at the Batten Bar Strip & Check for Seepage Points in Battens

A-2 Inspection Frequency Matrix

O&M Section No.	O&M Item	General Inspections[1]			Comprehensive Inspections[2]		
		Frequency	Type	Inspection	Frequency	Type	Inspection
				Drainage Channels Outside the IRP Cap			
5.1	East Main Drainage Channel	---	---	---	Semi-Annual	Visual	Check for Fallen Timber, Brush, or Debris & Check for Maintained Side-Slopes
5.2.1	South Drain Inlet Area - Headwalls	Twice-a-month*	Visual	Verify openings are Free of all Obstructions	Annual	Visual	Verify Construction Joints Maintained & Structure is Free of Surface Spalling or Cracks >1/16 Inches
5.2.2	South Drain Inlet Area - Riprap	Monthly*	Visual	Verify Integrity & Free of Debris	Annual	Visual	Verify Free of Brush Growth & Check Minimum Riprap 1' Depth
5.2.3	South Drain Inlet Area - Gabion Basket System	Monthly*	Visual	Verify Integrity & Free of Debris	Annual	Visual	Verify Free of Brush Growth & Check for Signs of Rust
				South East Cap			
6.1	SE Cap / Geomembrane Liner	Monthly*	Visual	If Exposed, Verify Liner is Free of Penetrations/ Tears/Thin Spots	See items in Sections 6.2 through 6.4	Visual	See items in Sections 6.2 through 6.4
6.2	SE Cap / Turf	Monthly*	Visual	Check for Signs of Animal Burrowing, Verify No Eroded Areas, & Verify No Erosion Gullies	----	----	----
6.3	SE Cap / Riprap Outlet	Monthly*	Visual	Verify Integrity, Free of Brush & Debris, & Composite Drainage Net not Damaged (if exposed)	Annual	Visual	Verify Free of Brush Growth & Check for Maintained Side-slopes
6.4	SE Cap Tie-In	Monthly	Visual	Check for Liner Pullout	Annual	Visual	Check Integrity of Cap Transition (Anchoring of Liner in Trenches)
				General Site Components			
7.1	MFDS Roadways	Monthly*	Visual	Check for Potholes/Rutting/Stone Washout	Semi-Annual	Visual	Verify Road Surface & Side-Slopes Are Maintained
7.2	MFDS Security (Fencing/Locks/Gates)	Daily	Visual	Verify Gates & Latches Work Properly, Tension Wire is Tightly Strung, Fencing is Grounded, Inspect for Signs of Rust & Breach by Animals or Trespassers, & Check that the Traffic Control Gates at the EDB Emergency Spillway are Locked Operational to Commonwealth Security and H&S Procedures	Semi-Annual	Visual	Verify Steel Posts/Concrete Footers are Structurally Sound, Integrity of Fence, & "Restricted Access Area" Signs Are Properly Posted
7.3	Alluvial Wells	Quarterly	Visual	Verify Pad-locks & Steel Caps are Secure	Semi-Annual	Visual	Verify Integrity of the Steel Casings (Operable Locks & Caps) & Concrete Pads are Free of Surface Damages, Wells Are Free of Silt/Debris (Measure Total Casing Depth), & Integrity of Bollards (Structurally Sound & Protects the Alluvial Well from Damage)
7.4	Monitoring Wells	Quarterly	Visual	Verify Pad-locks & Steel Caps are Secure	Semi-Annual	Visual	Verify Integrity of the Steel Casings (Operable Locks & Caps) & Concrete Pads are Free of Surface Damages & Wells are Free of Silt/Debris (Measure Total Casing Depth)
7.5	Samplers	---	---	---	Monthly*	Visual	Verify Portable Samplers are Structurally Sound and Located According to Figures 7-1 & 7-2
7.6.1	Erosion Monitoring - East Main Drainage Channel	------	------	------	Semi-Annual*	Visual	Identify any Erosive Conditions, Monuments are Undisturbed & Structurally Sound, Verify Brass Discs are Grouted, & Coordinates are Clearly Marked
7.6.2	Erosion Monitoring - South and West Drainage Channels	------	------	------	Semi-Annual*	Visual	Identify any Erosive Conditions
7.6.3	Erosion Monitoring - Adjacent Hillslopes	------	------	------	Semi-Annual*	Visual	Identify any Erosive Conditions
7.7	MFDS Liquids	Monthly	Visual	Check for Signs of Ballooning at Headwalls, for Accumulation in Subsided Areas & Around MFDS	------	------	------

A-2 Inspection Frequency Matrix

O&M Section No.	O&M Item	General Inspections[1]			Comprehensive Inspections[2]		
		Frequency	Type	Inspection	Frequency	Type	Inspection
General Site Components							
7.8	Survey Tower	Quarterly	Visual	Inspect for Signs of Termite Infestation, Loose Boards, & Verify Ladder is Securely Attached to Tower	Annual	Visual	Inspect Concrete Footers for Surface Damages & Check Tower for Structural Stability
7.9	Miscellaneous Turf Areas	Monthly*	Visual	Verify No Erosion Gullies, No Debris Along Side-slopes, & No Eroded Areas	Annual	Visual	Check for Maintained Side-slopes

Notes:

* O&M Items requiring additional inspection following severe weather conditions.

1. General inspections are site walks over the IRP Cap and the site perimeter (outside the IRP Cap area), identifying site components which are in need of repair.
2. Comprehensive inspections encompass general inspections with additional inspection items, identifying site components which are in need of repair.

A-3 – Repair Response Matrix

A-3
Repair Response Matrix

O&M Section No.	O&M Item	Repair Response[1]
	IRP CAP	
3.1.1	Geomembrane Liner	4 workings days or prior to a forecasted rain event
3.1.2	Geomembrane Liner Boot / Liner	4 workings days or prior to a forecasted rain event
3.1.2	Geomembrane Liner Boot / Accumulated Liquids	24 hours or as necessary to prevent a H&S concern or potential liner damage
3.1.2	Geomembrane Liner Boot / Subsidence	60 days or as necessary to maintain IRP Cap elevations & minimize liner fatigue, H&S concerns, and potential water infiltration
3.1.3	Transition to Extended Sumps	Prior to next monitoring event
3.1.3	Extended Sump	Prior to next monitoring event
3.1.3	Data Logger / Repair or Replacement	Within in 60 days
3.1.3	Data Logger / Calibration (see Note 2)	Upon repair or replacement
3.2.1	Ballooning at Headwalls & Accumulated Liquids	24 hours or as necessary to prevent a H&S concern or potential liner damage
3.2.1	Headwall / Obstruction Removal	24 hours or as necessary to prevent flow obstruction
3.2.1	Headwall / Structure	Evaluate and if concrete repairs are needed - 30 days
3.2.1	Headwall / Trash Grate & Restricting Plate	Ensure proper seal with the RCP opening at headwall
3.2.2	Headwall / Liner Batten	48 hours
3.2.3	Collection Sump at the Headwall	48 hours
3.3.1	Permanent Site Control Monuments	Prior to next monitoring event
3.3.2	Control Points	Shall be marked annually
3.3.3	Subsidence / Accumulated Liquids / Area Greater than Maximum Allowable	Rope-off area & pump water off in 24 hours or as necessary to prevent a H&S concern or potential liner damage
3.3.3	Subsidence Repair	60 days or as necessary to maintain IRP Cap elevations & minimize liner fatigue, H&S concerns, and potential water infiltration
3.3.3	Subsidence - Topographic Survey	Annually
3.4.1	Drainage Channels / Geomembrane Liner & Underlying Materials	4 workings days or prior to a forecasted rain event
3.4.1	Drainage Channels/Leaves or Debris Removal	14 days or as necessary to prevent flow obstruction
3.4.2	Diversion Berms / Geomembrane Liner & Underlying Materials	4 workings days or prior to a forecasted rain event
3.4.3	Anchor Trenches / Geomembrane Liner & Underlying Materials	4 workings days or prior to a forecasted rain event
3.5.1	AB Mats, Anchorage Repairs, & Clamp Replacement	14 days or as necessary to minimize lateral movement & prevent damage to underlying materials
3.5.1	AB Mats / Eliminate Weeds or Woody Vegetation	As necessary to minimize damage to underlying Geosynthetics & to prevent flow obstruction
3.5.2	Cementitious Fill Material / Concrete Spalling & Void Space Repair	14 days or as necessary to minimize erosion of cementitious fill materials, hydrostatic pressure beneath the AB-Mats, & lateral movement of the AB-Mats
3.5.3	Geomembrane Liner Flaps / Accumulated Liquids	24 hours or as necessary to prevent a H&S concern or potential liner damage
3.5.3	Geomembrane Liner Flaps / Damaged Area	4 workings days or prior to a forecasted rain event
3.5.4.1	South & North Inlets of the Interior Y-Channel Dead-man (If Exposed by the Geomembrane Liner Flap) / Damaged Battens	48 hours
3.5.4.1	South & North Inlets of the Interior Y-Channel Dead-man (If Exposed by the Geomembrane Liner Flap) / Ballooning Liner & Accumulated Liquids	24 hours or as necessary to prevent a H&S concern or potential liner damage
3.5.4.1	South & North Inlets of the Interior Y-Channel Dead-man (If Exposed by the Geomembrane Liner Flap) / Structure	Evaluate and if concrete repairs are needed - 30 days
3.5.4.2	SE Channel Inlet Dead-man / Damaged Battens	48 hours
3.5.4.2	SE Channel Inlet Dead-man / Ballooning Liner & Accumulated Liquids	24 hours or as necessary to prevent a H&S concern or potential liner damage
3.5.4.2	SE Channel Inlet Dead-man / Structure	Evaluate and if concrete repairs are needed - 30 days
3.6	Northeast Corner Piping / Manholes	30 days
3.7.1	LSF Tank Riser Extension / Liner	4 workings days or prior to a forecasted rain event
3.7.1	LSF Tank Riser Extension (Tanks 1, 2, 3, & 4) / Accumulated Liquids	24 hours or as necessary to prevent a H&S concern or potential liner damage

A-3
Repair Response Matrix

O&M Section No.	O&M Item	Repair Response[1]
	IRP CAP	
3.7.1	LSF Tank Riser Extension (Tanks 1, 2, 3, & 4) / Subsidence	60 days or as necessary to maintain IRP Cap elevations & minimize liner fatigue, H&S concerns, and potential water infiltration
3.7.2	LSF Tank Cathodic Protection	In accordance with manufacturer's O&M instructions (Appendix E-5)
	EDB	
4.1.1	Principal Spillway Riser Pipe / Obstruction Removal	24 hours or prior to a forecasted rain event
4.1.1	Principal Spillway Riser Pipe / Structure	14 days
4.1.2	Principal Spillway H-Flume / Obstruction and Silt or Sediment (In base of H-flume) Removal	24 hours or as necessary to prevent flow obstruction
4.1.2	Principal Spillway H-Flume / Structure	Evaluate and if concrete repairs are needed - 30 days
4.1.3	Principal Spillway Ultrasonic Flow Recorder / Calibration (via ISCO Software)	24 Hours
4.1.3	Principal Spillway Ultrasonic Flow Recorder / Repair or Replacement	60 days
4.1.3	Principal Spillway Rain Gauge / Plug & Accumulated Dust Removal	Prior to a Forecasted Rain Event
4.1.4	Principal Spillway Riprap / Replacement	30 days
4.1.4	Principal Spillway Riprap / Silt and Sediment Removal	30 days
4.1.4	Principal Spillway Riprap / Brush and Debris Removal	14 days
4.1.4	Principal Spillway Riprap / Eliminate Weeds or Woody Vegetation	As necessary to minimize damage to underlying Geosynthetics & to prevent flow obstruction
4.2.1	Emergency Spillway Concrete Pad / Debris and Obstruction Removal	24 hours
4.2.1	Emergency Spillway Concrete Pad / Structure	Evaluate and if concrete repairs are needed - 30 days
4.2.2	Emergency Spillway Gabions / Brush and Debris Removal	14 days
4.2.2	Emergency Spillway Gabions / Rust Preventative Product	As needed & noted on the inspection checklist
4.2.2	Emergency Spillway Gabions / Eliminate Weeds or Woody Vegetation	As necessary to minimize damage to underlying Geosynthetics & to prevent flow obstruction
4.3	Embankment / Side-Slope Maintenance	7 days
4.3	Embankment / Brush and Debris Removal	14 days
4.3	Embankment / Soil Amendments	As required to maintain vegetative growth & minimize erosion
4.3	Embankment / Weed Control	As required
4.3	Embankment / Vegetation	As required to maintain a maximum < 24" or other height as appropriate for utilized seed mix
4.4.1	EDB Riprap / Replacement	30 days
4.4.1	EDB Riprap / Silt or Sediment Removal	30 days
4.4.1	EDB Riprap / Brush and Debris Removal	14 days
4.4.1	EDB Riprap / Eliminate Weeds or Woody Vegetation	As necessary to minimize damage to underlying Geosynthetics & to prevent flow obstruction
4.4.2	EDB Gabions / Brush and Debris Removal	14 days
4.4.2	EDB Gabions / Rust Preventative Product	As needed & noted on the inspection checklist
4.4.2	EDB Gabions / Eliminate Weeds or Woody Vegetation	As necessary to minimize damage to underlying Geosynthetics & to prevent flow obstruction
4.4.3.1	EDB Y-Channel Outfall Structure / Obstructions	24 hours or as necessary to prevent flow obstruction
4.4.3.1	EDB Y-Channel Outfall Structure / Structure	Evaluate and if concrete repairs are needed - 30 days
4.4.3.2	EDB Y-Channel Outfall Structure Geomembrane Liner Flap / Damaged Area	4 Working Days or Prior to a Forecasted Rain Event
4.4.3.2	EDB Y-Channel Outfall Structure Geomembrane Liner Flap / Accumulated Liquids	24 hours or as necessary to prevent a H&S concern or potential liner damage
4.4.3.3	EDB Y-Channel Outfall Structure Liner Batten	48 hours
	Drainage Channels Outside the IRP Cap	
5.1	East Main Drainage Channel / Fallen Timber, Brush, and Debris Removal Diverting Flow	14 days
5.1	Fallen Timber, Brush, and Debris Removal if Impeding Flow Removal	24 hours or as necessary to prevent flow obstruction
5.2.1	South Drainage Inlet Area Headwall / Obstruction	24 hours or as necessary to prevent flow obstruction
5.2.1	South Drainage Inlet Area Headwall / Structure	Evaluate and if concrete repairs are needed - 30 days

A-3
Repair Response Matrix

O&M Section No.	O&M Item	Repair Response[1]
	Drainage Channels Outside the IRP Cap	
5.2.2	South Drainage Inlet Area Riprap / Replacement	30 days
5.2.2	South Drainage Inlet Area Riprap / Brush and Debris Removal	14 days
5.2.2	South Drainage Inlet Area Riprap / Eliminate Weeds or Woody Vegetation	As necessary to minimize damage to underlying Geosynthetics & to prevent flow obstruction
5.2.3	South Drainage Inlet Area Gabions / Brush and Debris Removal	14 days
5.2.3	South Drainage Inlet Area Gabions / Rust Preventative Product	As needed & noted on the inspection checklist
5.2.3	South Drainage Inlet Area Gabions / Eliminate Weeds or Woody Vegetation	As necessary to minimize damage to underlying Geosynthetics & to prevent flow obstruction
	South East Cap	
6.1	SE Cap Geomembrane Liner, If Exposed and Damaged	4 workings days or prior to a forecasted rain event
6.2	SE Cap Turf	7 days
6.2	SE Cap Turf / Soil Amendments	As required to maintain vegetative growth & minimize erosion
6.2	SE Cap Turf / Weed Control	As required
6.2	SE Cap Turf / Vegetation	As required to maintain a maximum < 24" or other height as appropriate for utilized seed mix
6.3	SE Cap Riprap Outlet / Replacement	30 days
6.3	SE Cap Riprap Outlet / Brush and Debris Removal	14 days
6.3	SE Cap Riprap Outlet / Eliminate Weeds or Woody Vegetation	As necessary to minimize damage to underlying Geosynthetics & to prevent flow obstruction
6.4	Southeast Cap Tie-in	7 days
	General Site Components	
7.1	MFDS Perimeter Roadways	7 days
7.1	MFDS Access Roadway	30 days
7.2	MFDS Security / Temporary Measures	Immediately followed by permanent measures
7.2	MFDS Security / Oil Hinges	Monthly
7.2	MFDS Security / Rust Preventative Product	As needed & noted on the inspection checklist
7.3	Alluvial Wells	Prior to next sampling event
7.4	Monitoring Wells	Prior to next sampling event
7.5	Samplers / Replacement or Repair	As soon as practicable - if location is critical to sampling, a sampler from a less critical location may be used temporarily prior to permanent repair or replacement
7.6.1	Erosion Monitoring East Main Drainage Channel / Dislodged Monuments, Brass Disks Needing to be Grouted, & Coordinates on Brass Discs Needing to be Remarked	Prior to next sampling event
7.6.2	Erosion Monitoring South & West Drainage Channels	Pursuant to IMP PSVP, Section 2.1
7.6.3	Erosion Monitoring Adjacent Hill Slops	Pursuant to IMP PSVP, Section 2.1
7.7	MFDS Liquids	Pursuant to Leachate Management Plan
7.8	Survey Tower	30 Days or Prior to Utilizing Tower
7.9	Miscellaneous Turf Areas / Turf	7 days
7.9	Miscellaneous Turf Areas / Soil Amendments	As required to maintain vegetative growth & minimize erosion
7.9	Miscellaneous Turf Areas / Weed Control	As required
7.9	Miscellaneous Turf Areas / Vegetation	As required to maintain a maximum < 24" or other height as appropriate for utilized seed mix

Notes:
1. During inspections, if a repair time is determined and repairs cannot be made within the specified response time, DOCUMENT reason. Make repair ASAP and DOCUMENT completion date on the appropriate forms in Appendix B.
2. Hand measurements shall be collected during repair prior to maintain database. Upon installation of repaired/ replacement data logger, a hand measurement shall be taken to verify data logger measurement.

Acronyms:
ASAP As Soon As Possible
EPA U.S. Environmental Protection Agency

Appendix B – O&M Inspections

B-1 – Weekly Inspections

B-1 Weekly Log for Daily Inspection

Date/Time: _____ **Weather Conditions:** _____

Inspector: _____ **Type of Inspection (Circle One): General Inspection or Following Sever Weather**

1. See Appendix A-2, "Inspection Frequency Matrix", for type of inspection and frequency (Daily/Weekly/Twice-A-Month/Monthly/Quarterly/Semi-Annual/Annual) and following severe weather.
2. See Appendix A-1 O&M Requirements Matrix for reporting/documentation requirements and maintenance activities and Appendix A-3, "Repair Response Matrix", for response time.
3. Severe Weather conditions include, but are not limited to, the following: blizzards, ice storms, tornadoes, wind measuring 50 knots (58 miles per hour) or greater, approximately 3/4-inch diameter hail or larger, frequent lightning, and 1.25 inches or greater rainfall in a 24-hour period or a high intensity shorter duration storm event with an intensity of 1 inch per hour.
4. An O&M inspection performed following a sever weather event will count as an inspection for the specified period.

4.1.3 Ultra Sonic Flow Recorder and Rain Gauge

Number	O&M Item	Inspection Item	Satisfactory	Unsatisfactory	Required Action	Action Completed Date/Initial
1	Rain gauge	Free of plug (accumulated dust clogging the rain gauge)				

7.2 MFDS Security

MFDS security inspections are on a daily frequency but recorded on a weekly log.

Number	O&M Item	Inspection Item	Status Satisfactory or Unsatisfactory (Notes 1 & 2)						Required Action	Action Completed Date/Initial
			Monday	Tuesday	Wednesday	Thursday	Friday	Saturday		
1	North Perimeter Fence at Site Access	Proper operation of gates and latches								
2	North Perimeter Fence at Site Access	Fence fabric/Tension wire strung and secure								
3	North Perimeter Fence at Site Access	Fencing is grounded								
4	North Perimeter Fence at Site Access	Any indications of rust (Note 3)								
5	North Perimeter Fence at Site Access	Fence fabric is free of signs of burrowing animals								
6	North Perimeter Fence at Site Access	Fence fabric is free of signs of trespassers								
7	IRP Cap Perimeter Fence	Proper operation of gates and latches								
8	IRP Cap Perimeter Fence	Fence fabric/Tension wire strung and secure								
9	IRP Cap Perimeter Fence	Fencing is grounded								
10	IRP Cap Perimeter Fence	Any indications of rust (Note 3)								
11	IRP Cap Perimeter Fence	Fence fabric is free of signs of burrowing animals								
12	IRP Cap Perimeter Fence	Fence fabric is free of signs of trespassers								
13	Traffic Control Gates at the EDB Emergency Spillway	Gates locked pursuant to Commonwealth security & H&S procedures								

Note:
1. Mark "S" for satisfactory condition or "U" for an unsatisfactory condition.
2. Mark "N/A" if the MFDS is closed; e.g., not a workday.
3. Mark "S" for satisfactory condition if 1) there is no indication of rust or if 2) there is an indication of rust but the integrity of the perimeter fence is NOT compromised.

B-2 – Twice-a-Month Inspections

B-2 Twice-a-Month Inspections

Date/Time: _____ **Weather Conditions:** _____

Inspector: _____ **Type of Inspection (Circle One): General Inspection or Following Sever Weather**

1. See Appendix A-2, *"Inspection Frequency Matrix",* for type of inspection and frequency (Daily/Weekly/Twice-A-Month/Monthly/Quarterly/Semi-Annual/Annual) and following severe weather.
2. See Appendix A-1 O&M Requirements Matrix for reporting/documentation requirements and maintenance activities and Appendix A-3, "Repair Response Matrix", for response time.
3. Severe Weather conditions include, but are not limited to, the following: blizzards, ice storms, tornadoes, wind measuring 50 knots (58 miles per hour) or greater, approximately 3/4-inch diameter hail or larger, frequent lightning, and 1.25 inches or greater rainfall in a 24-hour period or a high intensity shorter duration storm event with an intensity of 1 inch per hour.
4. An O&M inspection performed following a sever weather event will count as an inspection for the specified period.

3.2 Headwalls

Number	O&M Item	Inspection Item	Satisfactory	Unsatisfactory	Required Action	Action Completed Date/Initial
1	Headwall 'A" in NW Corner	Invert free of debris, obstructions, and sediment / silt				
2	Headwall 'A" in NW Corner	Free of ballooning liner at batten bar (indicating accumulated liquids)				
3	Headwall 'A" in NW Corner Batten Bar	Free of tears, penetrations, or thin spots				
4	Headwall 'A" Sump in NW Corner	Secure attachment of sump lid cap at liquid collection sump				
5	Headwall 'A" Sump in NW Corner	Free of tears, penetrations, or thin spots in transition of liner to sump connection				
6	Headwall 'B" in NW Corner	Invert free of debris, obstructions, and sediment / silt				
7	Headwall 'B" in NW Corner	Free of ballooning liner at batten bar (indicating accumulated liquids)				
8	Headwall 'B" in NW Corner Batten Bar	Free of tears, penetrations, or thin spots				
9	Upstream Headwall in NE Corner	Invert free of debris, obstructions, and sediment / silt				
10	Upstream Headwall in NE Corner	Free of ballooning liner at batten bar (indicating accumulated liquids)				
11	Upstream Headwall in NE Corner Batten Bar	Free of tears, penetrations, or thin spots				
12	Upstream Headwall Sump in NE Corner	Secure attachment of sump lid cap at liquid collection sump				
13	Upstream Headwall Sump in NE Corner	Free of tears, penetrations, or thin spots in transition of liner to sump connection				
14	Downstream Headwall in NE Corner	Invert free of debris, obstructions, and sediment / silt				
15	Downstream Headwall in NE Corner	Free of ballooning liner at batten bar (indicating accumulated liquids)				
16	Downstream Headwall in NE Corner Batten Bar	Free of tears, penetrations, or thin spots				

B-2 Twice-a-Month Inspections

Date/Time: _____ **Weather Conditions:** _____

Inspector: _____ **Type of Inspection (Circle One): General Inspection or Following Sever Weather**

1. See Appendix A-2, *"Inspection Frequency Matrix"*, for type of inspection and frequency (Daily/Weekly/Twice-A-Month/Monthly/Quarterly/Semi-Annual/Annual) and following severe weather.
2. See Appendix A-1 O&M Requirements Matrix for reporting/documentation requirements and maintenance activities and Appendix A-3, "Repair Response Matrix", for response time.
3. Severe Weather conditions include, but are not limited to, the following: blizzards, ice storms, tornadoes, wind measuring 50 knots (58 miles per hour) or greater, approximately 3/4-inch diameter hail or larger, frequent lightning, and 1.25 inches or greater rainfall in a 24-hour period or a high intensity shorter duration storm event with an intensity of 1 inch per hour.
4. An O&M inspection performed following a sever weather event will count as an inspection for the specified period.

3.4.1 Drainage Channels and 3.4.2 Diversion Berms

Number	O&M Item	Inspection Item	Satisfactory	Unsatisfactory	Required Action	Action Completed Date/Initial
1	Interior Y-Channel	Free of tears, penetrations, or thin spots in liner				
2	Interior Y-Channel	Geotextile fabric free of damages, if exposed				
3	Interior Y-Channel	Channel free of leaves or debris impeding flow				
4	Interior Y-Channel	Free of soft spots or wet areas				
5	North Perimeter Drainage Channel	Free of tears, penetrations, or thin spots in liner				
6	North Perimeter Drainage Channel	Geotextile fabric free of damages, if exposed				
7	North Perimeter Drainage Channel	Channel free of leaves or debris impeding flow				
8	North Perimeter Drainage Channel	Free of soft spots or wet areas				
9	North Channel Emergency Spillway	Free of tears, penetrations, or thin spots in liner				
10	North Channel Emergency Spillway	Geotextile fabric free of damages, if exposed				
11	North Channel Emergency Spillway	Channel free of leaves or debris impeding flow				
12	North Channel Emergency Spillway	Free of soft spots or wet areas				
13	East Perimeter Drainage Channel	Free of tears, penetrations, or thin spots in liner				
14	East Perimeter Drainage Channel	Geotextile fabric free of damages, if exposed				
15	East Perimeter Drainage Channel	Channel free of leaves or debris impeding flow				
16	East Perimeter Drainage Channel	Free of soft spots or wet areas				
17	South Perimeter Drainage Channel	Free of tears, penetrations, or thin spots in liner				
18	South Perimeter Drainage Channel	Geotextile fabric free of damages, if exposed				
19	South Perimeter Drainage Channel	Channel free of leaves or debris impeding flow				
20	South Perimeter Drainage Channel	Free of soft spots or wet areas				
21	West Perimeter Drainage Channel	Free of tears, penetrations, or thin spots in liner				
22	West Perimeter Drainage Channel	Geotextile fabric free of damages, if exposed				
23	West Perimeter Drainage Channel	Channel free of leaves or debris impeding flow				
24	West Perimeter Drainage Channel	Free of soft spots or wet areas				
25	Interior Diversion Berms[1]	Free of tears, penetrations, or thin spots in liner				
26	Interior Diversion Berms[1]	Geotextile fabric free of damages, if exposed				
27	Interior Diversion Berms[1]	Free of soft spots or wet areas				

Note: 1. Indicate which interior diversion berm in the Required Action.

B-2 Twice-a-Month Inspections

Date/Time: _____ **Weather Conditions:** _____

Inspector: _____ **Type of Inspection (Circle One): General Inspection or Following Sever Weather**

1. See Appendix A-2, *"Inspection Frequency Matrix"*, for type of inspection and frequency (Daily/Weekly/Twice-A-Month/Monthly/Quarterly/Semi-Annual/Annual) and following severe weather.
2. See Appendix A-1 O&M Requirements Matrix for reporting/documentation requirements and maintenance activities and Appendix A-3, "Repair Response Matrix", for response time.
3. Severe Weather conditions include, but are not limited to, the following: blizzards, ice storms, tornadoes, wind measuring 50 knots (58 miles per hour) or greater, approximately 3/4-inch diameter hail or larger, frequent lightning, and 1.25 inches or greater rainfall in a 24-hour period or a high intensity shorter duration storm event with an intensity of 1 inch per hour.
4. An O&M inspection performed following a sever weather event will count as an inspection for the specified period.

3.5 Articulating Concrete Block (AB) System

Number	O&M Item	Inspection Item	Satisfactory	Unsatisfactory	Required Action	Action Completed Date/Initial
1	Geomembrane Liner Flap - South Y-Channel Inlet[1]	Free of tears, penetrations, or thin spots in liner				
2	Geomembrane Liner Flap - South Y-Channel Inlet[1]	Free of ballooning liner / accumulated liquid				
3	Geomembrane Liner Flap - South Y-Channel Inlet[1]	Flap is tied-in into the AB mat blocks				
4	Geomembrane Liner Flap - North Y-Channel Inlet[1]	Free of tears, penetrations, or thin spots in liner				
5	Geomembrane Liner Flap - North Y-Channel Inlet[1]	Free of ballooning liner / accumulated liquid				
6	Geomembrane Liner Flap - North Y-Channel Inlet[1]	Flap is tied-in into the AB mat blocks				
7	Geomembrane Liner Flap - Along Y-Channel at Diversion Berm 6	Free of tears, penetrations, or thin spots in liner				
8	Geomembrane Liner Flap - Along Y-Channel at Diversion Berm 6	Free of ballooning liner / accumulated liquid				
9	Geomembrane Liner Flap - Along Y-Channel at Diversion Berm 6	Flap is tied-in into the AB mat blocks				
10	Upstream SE Perimeter Channel Dead-man	Liner free of tears, penetrations, or thin spots				

Note: 1. The dead-man structures at the South & North inlet of the interior Y-channel are covered with geomembrane liner flaps. Upon identification of tears/penetrations/thin spots, the Geomembrane Liner Flap shall be opened to inspect the dead-man structures at the South & North inlets. Remove any accumulated liquids (note in the Required Action) & proceed with inspection items 11 through 22 on the next page.

B-2 Twice-a-Month Inspections

Date/Time: _____ **Weather Conditions:** _____

Inspector: _____ **Type of Inspection (Circle One): General Inspection or Following Sever Weather**

1. See Appendix A-2, *"Inspection Frequency Matrix",* for type of inspection and frequency (Daily/Weekly/Twice-A-Month/Monthly/Quarterly/Semi-Annual/Annual) and following severe weather.
2. See Appendix A-1 O&M Requirements Matrix for reporting/documentation requirements and maintenance activities and Appendix A-3, "Repair Response Matrix", for response time.
3. Severe Weather conditions include, but are not limited to, the following: blizzards, ice storms, tornadoes, wind measuring 50 knots (58 miles per hour) or greater, approximately 3/4-inch diameter hail or larger, frequent lightning, and 1.25 inches or greater rainfall in a 24-hour period or a high intensity shorter duration storm event with an intensity of 1 inch per hour.
4. An O&M inspection performed following a sever weather event will count as an inspection for the specified period.

3.5 Articulating Concrete Block (AB) System

Continued

Number	O&M Item	Inspection Item	Satisfactory	Unsatisfactory	Required Action	Action Completed Date/Initial
11	Southern Dead-man at Y-Channel Inlet[2]	IRP Cap liner is free of tears, penetrations, or thin spots				
12	Southern Dead-man at Y-Channel Inlet[2]	Liner & gasket material are securely attached to the dead-man structure at the batten bar (no seepage points)				
13	Southern Dead-man at Y-Channel Inlet[2]	Concrete free of cracking >1/16" wide				
14	Southern Dead-man at Y-Channel Inlet[2]	Construction joints maintained				
15	Southern Dead-man at Y-Channel Inlet[2]	Free of surface spalling damaging integrity				
16	Southern Dead-man at Y-Channel Inlet[2]	Cementitious fill material free of spalling or void spaces allowing water to pool or erosion of adjacent fill material				
17	Northern Dead-man at Y-Channel Inlet[2]	IRP Cap liner is free of tears, penetrations, or thin spots				
18	Northern Dead-man at Y-Channel Inlet[2]	Liner & gasket material are securely attached to the dead-man structure at the batten bar (no seepage points)				
19	Northern Dead-man at Y-Channel Inlet[2]	Concrete free of cracking >1/16" wide				
20	Northern Dead-man at Y-Channel Inlet[2]	Construction joints maintained				
21	Northern Dead-man at Y-Channel Inlet[2]	Free of surface spalling damaging integrity				
22	Northern Dead-man at Y-Channel Inlet[2]	Cementitious fill material free of spalling or void spaces allowing water to pool or erosion of adjacent fill material				

Note: 1. The dead-man structures at the South & North inlet of the interior Y-channel are covered with geomembrane liner flaps. Upon identification of tears/penetrations/thin spots, the Geomembrane Liner Flap shall be opened to inspect the dead-man structures at the South & North inlets. Remove any accumulated liquids (note in the Required Action) & proceed with inspection items 11 through 22.

2. Upon repair, reinstall the Geomembrane Liner Flap pursuant to Section 3.5.3.1.

B-2 Twice-a-Month Inspections

Date/Time: _____ **Weather Conditions:** _____

Inspector: _____ **Type of Inspection (Circle One): General Inspection or Following Sever Weather**

1. See Appendix A-2, *"Inspection Frequency Matrix"*, for type of inspection and frequency (Daily/Weekly/Twice-A-Month/Monthly/Quarterly/Semi-Annual/Annual) and following severe weather.
2. See Appendix A-1 O&M Requirements Matrix for reporting/documentation requirements and maintenance activities and Appendix A-3, "Repair Response Matrix", for response time.
3. Severe Weather conditions include, but are not limited to, the following: blizzards, ice storms, tornadoes, wind measuring 50 knots (58 miles per hour) or greater, approximately 3/4-inch diameter hail or larger, frequent lightning, and 1.25 inches or greater rainfall in a 24-hour period or a high intensity shorter duration storm event with an intensity of 1 inch per hour.
4. An O&M inspection performed following a sever weather event will count as an inspection for the specified period.

4.1.1 Principal Spillway

Number	O&M Item	Inspection Item	Satisfactory	Unsatisfactory	Required Action	Action Completed Date/Initial
1	Riser Pipe	Free of debris and obstructions				
2	H-Flume	Free of debris and obstructions				
3	H-Flume	Base is free of silt or sediment				

4.2 Emergency Spillway

Number	O&M Item	Inspection Item	Satisfactory	Unsatisfactory	Required Action	Action Completed Date/Initial
1	Concrete Pad	Free of debris and obstructions				

4.4.3 Y-Channel Outfall

Number	O&M Item	Inspection Item	Satisfactory	Unsatisfactory	Required Action	Action Completed Date/Initial
1	Outfall Structure	Concrete channel free of debris & obstructions				
2	Outfall Structure	Stilling basin free of debris & obstructions				
3	Outfall Structure	1" dia. weep holes free of debris & obstructions				
4	Geomembrane Liner Flap at inlet of the Outfall Structure	Free of tears, penetrations, or thin spots in liner				
5	Geomembrane Liner Flap at inlet of the Outfall Structure	Free of ballooning liner / accumulated liquid				
6	Geomembrane Liner Flap at inlet of the Outfall Structure	Flap is battened to the concrete channel				
7	Batten at inlet of the Outfall Structure	Free of tears, penetrations, or thin spots				

5.2 South Drain Inlet Area

Number	O&M Item	Inspection Item	Satisfactory	Unsatisfactory	Required Action	Action Completed Date/Initial
1	Upstream Headwall	Invert free of debris & obstructions				
2	Downstream Headwall	Invert free of debris & obstructions				

B-3 – Monthly Inspections

B-3 Monthly Inspections

Date/Time: _____ **Weather Conditions:** _____

Inspector: _____ **Type of Inspection (Circle One): General Inspection or Following Sever Weather**

1. See Appendix A-2, *"Inspection Frequency Matrix",* for type of inspection and frequency (Daily/Weekly/Twice-A-Month/Monthly/Quarterly/Semi-Annual/Annual) and following severe weather.
2. See Appendix A-1 O&M Requirements Matrix for reporting/documentation requirements and maintenance activities and Appendix A-3, "Repair Response Matrix", for response time.
3. Severe Weather conditions include, but are not limited to, the following: blizzards, ice storms, tornadoes, wind measuring 50 knots (58 miles per hour) or greater, approximately 3/4-inch diameter hail or larger, frequent lightning, and 1.25 inches or greater rainfall in a 24-hour period or a high intensity shorter duration storm event with an intensity of 1 inch per hour.
4. An O&M inspection performed following a sever weather event will count as an inspection for the specified period.

3.1 Geomembrane Liner

Number	O&M Item	Inspection Item	Satisfactory	Unsatisfactory	Required Action	Action Completed Date/Initial
1	IRP Cap[1]	Free of tears, penetrations, or thin spots in 45-mil reinforced polypropylene (liner)				
2	IRP Cap[1]	Sealed factory seams via visual site walk				
3	IRP Cap1[1]	Free of soft spots or wet areas				
4	Geomembrane Liner Boots[2] (83)	Free of tears, penetrations, or thin spots in transition of liner to liner boots				
5	Geomembrane Liner Boots[3] (83)	Free of liner fatigue, accumulated liquids, settlement, et. at the sump extension				
6	Sump Extension[2] (83)	Free of tears, penetrations, or thin spots in transition of liner to liner boots				
7	Sump Extension[2] (83)	Integrity of sump lid				
8	Sump Extension[2] (83)	Integrity of geomembrane liner boots				
9	Data Logger[2] (83)	Integrity of data logger system in extended sump				

Note: 1. For repairs, see Appendix C-1 for the 45-mil reinforced polypropylene repair procedure.
2. Indicate sump extension identification in Required Action. See Appendix C-2 for sump lid and data logger removal/re-installation procedure & calibrate the data logger (if required) in accordance with Appendix E-3.
3. If settlement, see Appendix C-4 for the repair procedure & detailed documentation.

3.3 Subsidence

Number	O&M Item	Inspection Item	Approximate Water Depth (in.)	Approximate Area (SF)	Required Action	Action Completed Date/Initial
1	Subsidence Monitoring	Document any subsidence area / panel # ____				
2	Subsidence Monitoring	Document any subsidence area / panel # ____				
3	Subsidence Monitoring	Document any subsidence area / panel # ____				
4	Subsidence Monitoring	Document any subsidence area / panel # ____				
5	Subsidence Monitoring	Document any subsidence area / panel # ____				
6	Subsidence Monitoring	Document any subsidence area / panel # ____				
7	Subsidence Monitoring	Document any subsidence area / panel # ____				
8	Subsidence Monitoring	Document any subsidence area / panel # ____				
9	Subsidence Monitoring	Document any subsidence area / panel # ____				
10	Subsidence Monitoring	Document any subsidence area / panel # ____				

Note: 1. See Appendix C-4 for repair procedure and detailed documentation.

B-3 Monthly Inspections

Date/Time: _____ **Weather Conditions:** _____

Inspector: _____ **Type of Inspection (Circle One): General Inspection or Following Sever Weather**

1. See Appendix A-2, *"Inspection Frequency Matrix"*, for type of inspection and frequency (Daily/Weekly/Twice-A-Month/Monthly/Quarterly/Semi-Annual/Annual) and following severe weather.
2. See Appendix A-1 O&M Requirements Matrix for reporting/documentation requirements and maintenance activities and Appendix A-3, "Repair Response Matrix", for response time.
3. Severe Weather conditions include, but are not limited to, the following: blizzards, ice storms, tornadoes, wind measuring 50 knots (58 miles per hour) or greater, approximately 3/4-inch diameter hail or larger, frequent lightning, and 1.25 inches or greater rainfall in a 24-hour period or a high intensity shorter duration storm event with an intensity of 1 inch per hour.
4. An O&M inspection performed following a sever weather event will count as an inspection for the specified period.

3.4.3 Anchor Trenches

Number	O&M Item	Inspection Item	Satisfactory	Unsatisfactory	Required Action[1]	Action Completed Date/Initial
1	Interior Anchor Trenches[1]	Free of pulled out liner				
2	Interior Anchor Trenches[1]	Free of tears, penetrations, or thin spots in liner				
3	Interior Anchor Trenches[1]	Geotextile fabric free of damages, if exposed				
4	Interior Anchor Trenches[1]	Free of soft spots or wet areas				
5	North Perimeter Anchor Trench	Free of pulled out liner				
6	North Perimeter Anchor Trench	Free of tears, penetrations, or thin spots in liner				
7	North Perimeter Anchor Trench	Geotextile fabric free of damages, if exposed				
8	North Perimeter Anchor Trench	Free of soft spots or wet areas				
9	East Perimeter Anchor Trench	Free of pulled out liner				
10	East Perimeter Anchor Trench	Free of tears, penetrations, or thin spots in liner				
11	East Perimeter Anchor Trench	Geotextile fabric free of damages, if exposed				
12	East Perimeter Anchor Trench	Free of soft spots or wet areas				
13	South Perimeter Anchor Trench	Free of pulled out liner				
14	South Perimeter Anchor Trench	Free of tears, penetrations, or thin spots in liner				
15	South Perimeter Anchor Trench	Geotextile fabric free of damages, if exposed				
16	South Perimeter Anchor Trench	Free of soft spots or wet areas				
17	West Perimeter Anchor Trench	Free of pulled out liner				
18	West Perimeter Anchor Trench	Free of tears, penetrations, or thin spots in liner				
19	West Perimeter Anchor Trench	Geotextile fabric free of damages, if exposed				
20	West Perimeter Anchor Trench	Free of soft spots or wet areas				

Note 1: Indicate which interior anchor trench in the Required Action.

B-3 Monthly Inspections

Date/Time: _____ **Weather Conditions:** _____

Inspector: _____ **Type of Inspection (Circle One): General Inspection or Following Sever Weather**

1. See Appendix A-2, *"Inspection Frequency Matrix"*, for type of inspection and frequency (Daily/Weekly/Twice-A-Month/Monthly/Quarterly/Semi-Annual/Annual) and following severe weather.
2. See Appendix A-1 O&M Requirements Matrix for reporting/documentation requirements and maintenance activities and Appendix A-3, "Repair Response Matrix", for response time.
3. Severe Weather conditions include, but are not limited to, the following: blizzards, ice storms, tornadoes, wind measuring 50 knots (58 miles per hour) or greater, approximately 3/4-inch diameter hail or larger, frequent lightning, and 1.25 inches or greater rainfall in a 24-hour period or a high intensity shorter duration storm event with an intensity of 1 inch per hour.
4. An O&M inspection performed following a sever weather event will count as an inspection for the specified period.

3.5 Articulating Concrete Block (AB) System

Number	O&M Item	Inspection Item	Satisfactory	Unsatisfactory	Required Action	Action Completed Date/Initial
1	North Perimeter Channel	Free of broken concrete blocks				
2	North Perimeter Channel	Liner free of tears, penetrations, or thin spots				
3	North Perimeter Channel	Free of vegetative growth impeding channel flow				
4	North Perimeter Channel	Cementitious fill material free of spalling or void spaces allowing water to pool or erosion of adjacent fill material				
5	North Perimeter Channel	Steel clamps connecting the AB mats (3 clamps on the long side & 1 clamp on the short side)				
6	East Perimeter Channel	Free of broken concrete blocks				
7	East Perimeter Channel	Liner free of tears, penetrations, or thin spots				
8	East Perimeter Channel	Free of vegetative growth impeding channel flow				
9	East Perimeter Channel	Steel clamps connecting the AB mats (3 clamps on the long side & 1 clamp on the short side)				
10	SE Perimeter Channel	Free of broken concrete blocks				
11	SE Perimeter Channel	Liner free of tears, penetrations, or thin spots				
12	SE Perimeter Channel	Free of vegetative growth impeding channel flow				
13	SE Perimeter Channel	Cementitious fill material at dead-man is free of spalling or void spaces allowing water to pool or erosion of adjacent fill material				
14	SE Perimeter Channel	Cementitious fill material in the corner of is free of spalling or void spaces allowing water to pool or erosion of adjacent fill material				
15	SE Perimeter Channel	Steel clamps connecting the AB mats (3 clamps on the long side & 1 clamp on the short side)				
16	Interior Y-Channel	Free of broken concrete blocks				
17	Interior Y-Channel	Liner free of tears, penetrations, or thin spots				
18	Interior Y-Channel	Free of vegetative growth impeding channel flow				
19	Interior Y-Channel	Cementitious fill material free of spalling or void spaces allowing water to pool or erosion of adjacent fill material				
20	Interior Y-Channel	Steel clamps connecting the AB mats (3 clamps on the long side & 1 clamp on the short side)				

B-3 Monthly Inspections

Date/Time: _____ **Weather Conditions:** _____

Inspector: _____ **Type of Inspection (Circle One): General Inspection or Following Sever Weather**

1. See Appendix A-2, *"Inspection Frequency Matrix"*, for type of inspection and frequency (Daily/Weekly/Twice-A-Month/Monthly/Quarterly/Semi-Annual/Annual) and following severe weather.
2. See Appendix A-1 O&M Requirements Matrix for reporting/documentation requirements and maintenance activities and Appendix A-3, "Repair Response Matrix", for response time.
3. Severe Weather conditions include, but are not limited to, the following: blizzards, ice storms, tornadoes, wind measuring 50 knots (58 miles per hour) or greater, approximately 3/4-inch diameter hail or larger, frequent lightning, and 1.25 inches or greater rainfall in a 24-hour period or a high intensity shorter duration storm event with an intensity of 1 inch per hour.
4. An O&M inspection performed following a sever weather event will count as an inspection for the specified period.

3.6 Northeast Corner Piping

Number	O&M Item	Inspection Item	Satisfactory	Unsatisfactory	Required Action	Action Completed Date/Initial
1	Manhole #1	Manhole lid secure attached and flush with ground surface				
2	Manhole #2	Manhole lid secure attached and flush with ground surface				
3	Upstream Headwall	Headwall invert/culvert (trash grate/restricting plate) free of debris				
4	Downstream Headwall	Headwall invert/culvert free of debris				

3.7 Former Leachate Storage Facility Area

Number	O&M Item	Inspection Item	Satisfactory	Unsatisfactory	Required Action	Action Completed Date/Initial
1	LSF Tank 1[1]	Free of tears, penetrations, or thin spots in transition of liner in the access and vent riser extensions				
2	LSF Tank 1[2]	Free of liner fatigue, accumulated liquids, settlement, et. at the sump extension				
3	LSF Tank 2	Free of tears, penetrations, or thin spots in transition of liner in the access and vent riser extensions				
4	LSF Tank 2[2]	Free of liner fatigue, accumulated liquids, settlement, et. at the sump extension				
5	LSF Tank 3	Free of tears, penetrations, or thin spots in transition of liner in the access and vent riser extensions				
6	LSF Tank 3[2]	Free of liner fatigue, accumulated liquids, settlement, et. at the sump extension				
7	LSF Tank 4	Free of tears, penetrations, or thin spots in transition of liner in the access and vent riser extensions				
8	LSF Tank 4[2]	Free of liner fatigue, accumulated liquids, settlement, et. at the sump extension				
9	Rectifier Box for the Cathodic Protection System	Record the Direct Current **Reading** _____				
10	Rectifier Box for the Cathodic Protection System	Record the Amps Output **Reading** _____				

Notes: 1. Opening of LSF Tank 1 access & vent riser shall be in accordance with the Commonwealth Procedures.
2. If settlement, see Appendix C-4 for the repair procedure & detailed documentation.

B-3 Monthly Inspections

Date/Time: _____ **Weather Conditions:** _____

Inspector: _____ **Type of Inspection (Circle One): General Inspection or Following Sever Weather**

1. See Appendix A-2, *"Inspection Frequency Matrix"*, for type of inspection and frequency (Daily/Weekly/Twice-A-Month/Monthly/Quarterly/Semi-Annual/Annual) and following severe weather.
2. See Appendix A-1 O&M Requirements Matrix for reporting/documentation requirements and maintenance activities and Appendix A-3, "Repair Response Matrix", for response time.
3. Severe Weather conditions include, but are not limited to, the following: blizzards, ice storms, tornadoes, wind measuring 50 knots (58 miles per hour) or greater, approximately 3/4-inch diameter hail or larger, frequent lightning, and 1.25 inches or greater rainfall in a 24-hour period or a high intensity shorter duration storm event with an intensity of 1 inch per hour.
4. An O&M inspection performed following a sever weather event will count as an inspection for the specified period.

4.1 Principal Spillway

Number	O&M Item	Inspection Item	Satisfactory	Unsatisfactory	Required Action	Action Completed Date/Initial
1	Ultrasonic Flow Recorder	Calibrated reading measurement compares with staff gauge measurement				
2	Riprap	Free of debris				
3	Riprap	Free of riprap washout compromising side-slopes				
4	Riprap	If exposed, geotextile fabric free of damages				
5	Riprap	Free of silt / sediment accumulation >3 inches				

4.2 Emergency Spillway

Number	O&M Item	Inspection Item	Satisfactory	Unsatisfactory	Required Action	Action Completed Date/Initial
1	Gabion Basket System[1]	Free of debris				
2	Gabion Basket System[1]	Free of riprap washout compromising integrity of basket system				

Note: 1. To maintain integrity, a spray rust preventative product may be used on an as needed basis & note in the Required Action.

4.3 Embankment

Number	O&M Item	Inspection Item	Satisfactory	Unsatisfactory	Required Action	Action Completed Date/Initial
1	Embankment	Side-slopes free of debris				
2	Embankment	Side-slopes free of erosion gullies				
3	Embankment	Free of eroded areas				

B-3 Monthly Inspections

Date/Time: _____ **Weather Conditions:** _____

Inspector: _____ **Type of Inspection (Circle One): General Inspection or Following Sever Weather**

1. See Appendix A-2, *"Inspection Frequency Matrix",* for type of inspection and frequency (Daily/Weekly/Twice-A-Month/Monthly/Quarterly/Semi-Annual/Annual) and following severe weather.
2. See Appendix A-1 O&M Requirements Matrix for reporting/documentation requirements and maintenance activities and Appendix A-3, "Repair Response Matrix", for response time.
3. Severe Weather conditions include, but are not limited to, the following: blizzards, ice storms, tornadoes, wind measuring 50 knots (58 miles per hour) or greater, approximately 3/4-inch diameter hail or larger, frequent lightning, and 1.25 inches or greater rainfall in a 24-hour period or a high intensity shorter duration storm event with an intensity of 1 inch per hour.
4. An O&M inspection performed following a sever weather event will count as an inspection for the specified period.

4.4 Basin Area

Number	O&M Item	Inspection Item	Satisfactory	Unsatisfactory	Required Action	Action Completed Date/Initial
2	Riprap	Free of debris				
3	Riprap	Free of riprap washout compromising side-slopes				
4	Riprap	If exposed, geotextile fabric free of damages				
5	Riprap	Free of silt / sediment accumulation >3 inches				
4	Gabion Basket System[1]	Free of debris				
5	Gabion Basket System[1]	Free of riprap washout compromising basket systems				

Note: 1. To maintain integrity, a spray rust preventative product may be used on an as needed basis & note in the Required Action.

5.2 Perimeter Drainage Channel

Number	O&M Item	Inspection Item	Satisfactory	Unsatisfactory	Required Action	Action Completed Date/Initial
1	Riprap	Free of debris				
2	Riprap	No riprap washout compromising side-slopes				
3	Gabion Basket System[1]	Free of debris				
4	Gabion Basket System[1]	Free of riprap washout compromising basket systems				

Note: 1. To maintain integrity, a spray rust preventative product may be used on an as needed basis & note in the Required Action.

6.1 SE Cap Geomembrane Liner

Number	O&M Item	Inspection Item	Satisfactory	Unsatisfactory	Required Action	Action Completed Date/Initial
1	Geomembrane Liner	Free of exposed liner in turf				
2	Geomembrane Liner	If liner is exposed, free of penetrations/tears/thin spots				

6.2 SE Cap Turf

Number	O&M Item	Inspection Item	Satisfactory	Unsatisfactory	Required Action	Action Completed Date/Initial
1	Turf	Free of eroded areas				
2	Turf	Free of erosion gullies				
3	Turf	Free of signs of borrowing animals				

B-3 Monthly Inspections

Date/Time: _____ **Weather Conditions:** _____

Inspector: _____ **Type of Inspection (Circle One): General Inspection or Following Sever Weather**

1. See Appendix A-2, *"Inspection Frequency Matrix"*, for type of inspection and frequency (Daily/Weekly/Twice-A-Month/Monthly/Quarterly/Semi-Annual/Annual) and following severe weather.
2. See Appendix A-1 O&M Requirements Matrix for reporting/documentation requirements and maintenance activities and Appendix A-3, "Repair Response Matrix", for response time.
3. Severe Weather conditions include, but are not limited to, the following: blizzards, ice storms, tornadoes, wind measuring 50 knots (58 miles per hour) or greater, approximately 3/4-inch diameter hail or larger, frequent lightning, and 1.25 inches or greater rainfall in a 24-hour period or a high intensity shorter duration storm event with an intensity of 1 inch per hour.
4. An O&M inspection performed following a sever weather event will count as an inspection for the specified period.

6.3 SE Cap Riprap Outlet

Number	O&M Item	Inspection Item	Satisfactory	Unsatisfactory	Required Action	Action Completed Date/Initial
1	Riprap Outlet	Free of riprap washout compromising side-slopes				
2	Riprap	If exposed, geocomposite drainage net free of damages				
3	Riprap Outlet	Free of debris				

6.4 SE Cap Tie-in

Number	O&M Item	Inspection Item	Satisfactory	Unsatisfactory	Required Action	Action Completed Date/Initial
1	IRP Cap Tie-in	Transition of the IRP Cap with Southeast Cap Intact / Free of liner pull-out				

7.1 MFDS Roadways

Number	O&M Item	Inspection Item	Satisfactory	Unsatisfactory	Required Action	Action Completed Date/Initial
1	Site Access Roadway	Free of ruts and pot holes				
2	Site Access Roadway	No aggregate wash-out				
3	North Perimeter Roadway	Free of ruts and pot holes				
4	North Perimeter Roadway	No aggregate wash-out				
5	East Perimeter Roadway	Free of ruts and pot holes				
6	East Perimeter Roadway	No aggregate wash-out				
7	South Perimeter Roadway	Free of ruts and pot holes				
8	South Perimeter Roadway	No aggregate wash-out				
9	West Perimeter Roadway	Free of ruts and pot holes				
10	West Perimeter Roadway	No aggregate wash-out				

7.2 MFDS Security

Number	O&M Item	Maintenance Item	Product Name	Action Completed Date/Initial
1	North Perimeter Fence at Site Access[1]	Oil Hinges		
2	IRP Cap Perimeter Fence[1]	Oil Hinges		

Note: 1. To maintain integrity, a spray rust preventative product may be used on an as needed basis & note in the Required Action..

B-3 Monthly Inspections

Date/Time: _____ **Weather Conditions:** _____

Inspector: _____ **Type of Inspection (Circle One): General Inspection or Following Sever Weather**

1. See Appendix A-2, *"Inspection Frequency Matrix"*, for type of inspection and frequency (Daily/Weekly/Twice-A-Month/Monthly/Quarterly/Semi-Annual/Annual) and following severe weather.
2. See Appendix A-1 O&M Requirements Matrix for reporting/documentation requirements and maintenance activities and Appendix A-3, "Repair Response Matrix", for response time.
3. Severe Weather conditions include, but are not limited to, the following: blizzards, ice storms, tornadoes, wind measuring 50 knots (58 miles per hour) or greater, approximately 3/4-inch diameter hail or larger, frequent lightning, and 1.25 inches or greater rainfall in a 24-hour period or a high intensity shorter duration storm event with an intensity of 1 inch per hour.
4. An O&M inspection performed following a sever weather event will count as an inspection for the specified period.

7.5 Samplers

Number	O&M Item	Inspection Item	Satisfactory	Unsatisfactory	Required Action	Action Completed Date/Initial
1	Samplers[1]	Portable samplers free of damages				
2	Samplers[1]	Locations according to Figures 7-1 and 7-2				

Note: 1. Indicate sampler identification in Required Action.

7.7 Liquids

Number	O&M Item	Inspection Item	Satisfactory	Unsatisfactory	Required Action	Action Completed Date/Initial
1	Headwall Sumps[1]	Free of accumulated liquids				
2	Subsided Areas (If Any)[2]	Free of accumulated liquids				
3	Around MFDS[3]	Free of accumulated liquids				

Note: 1. Indicate headwall sump, identification in Required Action.
2. Indicate liner panel location or area of IRP Cap in Required Action.
3. Indicate location in Required Action.

7.9 Miscellaneous Turf Areas

Number	O&M Item	Inspection Item	Satisfactory	Unsatisfactory	Required Action	Action Completed Date/Initial
1	Borrow Pit - Turf[1]	Free of eroded areas				
2	Borrow Pit - Turf[1]	Free of erosion gullies				
3	Borrow Pit - Turf[1]	Free of debris along side-slopes				
4	Stockpile Pit - Turf[1]	Free of eroded areas				
5	Stockpile Pit - Turf[1]	Free of erosion gullies				
6	Stockpile Pit - Turf[1]	Free of debris along side-slopes				
7	Areas around the IRP Cap - Turf[1]	Free of eroded areas				
8	Areas around the IRP Cap - Turf[1]	Free of erosion gullies				
9	Areas around the IRP Cap - Turf[1]	Free of debris along side-slopes				

Note: 1. Indicate designated area (Figure 7-4) in Required Action.

B-4 – Quarterly Inspections

B-4 Quarterly Inspections

Date/Time: _____ **Weather Conditions:** _____

Inspector: _____ **Type of Inspection (Circle One): General Inspection or Following Sever Weather**

1. See Appendix A-2, *"Inspection Frequency Matrix"*, for type of inspection and frequency (Daily/Weekly/Twice-A-Month/Monthly/Quarterly/Semi-Annual/Annual) and following severe weather.
2. See Appendix A-1 O&M Requirements Matrix for reporting/documentation requirements and maintenance activities and Appendix A-3, "Repair Response Matrix", for response time.
3. Severe Weather conditions include, but are not limited to, the following: blizzards, ice storms, tornadoes, wind measuring 50 knots (58 miles per hour) or greater, approximately 3/4-inch diameter hail or larger, frequent lightning, and 1.25 inches or greater rainfall in a 24-hour period or a high intensity shorter duration storm event with an intensity of 1 inch per hour.
4. An O&M inspection performed following a sever weather event will count as an inspection for the specified period.

3.1 Geomembrane Liner

Number	O&M Item	Inspection Item	Satisfactory	Unsatisfactory	Required Action	Action Completed Date/Initial
1	Data Logger[1 & 2]	Secure attachment to sump extension				
2	Data Logger[1 & 2]	Operates properly				

Note: 1. Indicate sump extension identification in Required Action if a repair is necessary. See Appendix C-2 for sump lid and data logger removal/re-installation procedure.
2. Calibrate the data logger (if required) in accordance with Appendix E-3.

7.3 Alluvial Wells

Number	O&M Item	Inspection Item	Satisfactory	Unsatisfactory	Required Action	Action Completed Date/Initial
1	Alluvial Wells[1] (14)	Secure attachment of padlocks and steel caps				

Note: 1. Indicate alluvial well identification in Required Action.

7.4 Monitoring Wells

Number	O&M Item	Inspection Item	Satisfactory	Unsatisfactory	Required Action	Action Completed Date/Initial
1	Monitoring Wells[1] (16)	Secure attachment of pad locks and steels caps				

Note: 1. Indicate monitoring well identification in Required Action.

7.8 Survey Tower

Number	O&M Item	Inspection Item	Satisfactory	Unsatisfactory	Required Action	Action Completed Date/Initial
1	Survey Tower	Decking and posts free of termite infestation				
2	Survey Tower	No loose boards				
3	Survey Tower	Ladder securely attached to the tower				

B-5 – Semi-Annual Inspections

B-5 Semi-Annual Inspections

Date/Time: _____ **Weather Conditions:** _____

Inspector: _____ **Type of Inspection (Circle One): General Inspection or Following Sever Weather**

1. See Appendix A-2, *"Inspection Frequency Matrix"*, for type of inspection and frequency (Daily/Weekly/Twice-A-Month/Monthly/Quarterly/Semi-Annual/Annual) and following severe weather.
2. See Appendix A-1 O&M Requirements Matrix for reporting/documentation requirements and maintenance activities and Appendix A-3, "Repair Response Matrix", for response time.
3. Severe Weather conditions include, but are not limited to, the following: blizzards, ice storms, tornadoes, wind measuring 50 knots (58 miles per hour) or greater, approximately 3/4-inch diameter hail or larger, frequent lightning, and 1.25 inches or greater rainfall in a 24-hour period or a high intensity shorter duration storm event with an intensity of 1 inch per hour.
4. An O&M inspection performed following a sever weather event will count as an inspection for the specified period.

3.2.2 Headwall Battens

Number	O&M Item	Inspection Item	Satisfactory	Unsatisfactory	Required Action	Action Completed Date/Initial
1	Headwall 'A' Batten Bar in NW Corner	Batten bar strip securely attached to headwall				
2	Headwall 'A' Batten Bar in NW Corner	Free of pulled out liner segments or seepage points				
3	Headwall 'B' Batten Bar in NW Corner	Batten bar strip securely attached to headwall				
4	Headwall 'B' Batten Bar in NW Corner	Free of pulled out liner segments or seepage points				
5	Upstream Headwall Batten Bar of NE Corner Piping System	Batten bar strip securely attached to headwall				
6	Upstream Headwall Batten Bar of NE Corner Piping System	Free of pulled out liner segments or seepage points				
7	Downstream Headwall Batten Bar of NE Corner Piping System	Batten bar strip securely attached to headwall				
8	Downstream Headwall Batten Bar of NE Corner Piping System	Free of pulled out liner segments or seepage points				

3.5 Articulating Concrete Block (AB) System

Number	O&M Item	Inspection Item	Satisfactory	Unsatisfactory	Required Action	Action Completed Date/Initial
1	North Channel	Anchorage at Headwall B intact, preventing lateral movement				
3	East Channel	Anchorage at headwall intact, preventing lateral movement				
6	SE Channel	Liner beneath encased stainless steel cables free of tears / penetrations / thin spots				
7	SE Channel	Plastic tubing encasing the stainless steel cables free of penetrations, cracking, & worn areas				
8	Upstream SE Perimeter Channel Dead-man	Liner & gasket material are securely attached to the dead-man structure at the batten bar (no seepage points)				

B-5 Semi-Annual Inspections

Date/Time: _____ **Weather Conditions:** _____

Inspector: _____ **Type of Inspection (Circle One): General Inspection or Following Sever Weather**

1. See Appendix A-2, *"Inspection Frequency Matrix",* for type of inspection and frequency (Daily/Weekly/Twice-A-Month/Monthly/Quarterly/Semi-Annual/Annual) and following severe weather.
2. See Appendix A-1 O&M Requirements Matrix for reporting/documentation requirements and maintenance activities and Appendix A-3, "Repair Response Matrix", for response time.
3. Severe Weather conditions include, but are not limited to, the following: blizzards, ice storms, tornadoes, wind measuring 50 knots (58 miles per hour) or greater, approximately 3/4-inch diameter hail or larger, frequent lightning, and 1.25 inches or greater rainfall in a 24-hour period or a high intensity shorter duration storm event with an intensity of 1 inch per hour.
4. An O&M inspection performed following a sever weather event will count as an inspection for the specified period.

4.4.3 Y-Channel Outfall

Number	O&M Item	Inspection Item	Satisfactory	Unsatisfactory	Required Action	Action Completed Date/Initial
1	Batten at inlet of the Outfall Structure	Batten bar strip securely attached to concrete channel at inlet				
2	Batten at inlet of the Outfall Structure	Free of pulled out liner segments or seepage points				

5.1 East Main Drainage Channel

Number	O&M Item	Inspection Item	Satisfactory	Unsatisfactory	Required Action	Action Completed Date/Initial
1	East Main Drainage Channel	Free of fallen timber				
2	East Main Drainage Channel	Free of brush and debris				
3	East Main Drainage Channel	Maintained sideslopes				

7.1 MFDS Roadways

Number	O&M Item	Inspection Item	Satisfactory	Unsatisfactory	Required Action	Action Completed Date/Initial
1	Site Access Roadway	Road surface maintained				
2	Site Access Roadway	Verify sideslopes are maintained				
3	North Perimeter Roadway	Road surface maintained				
4	North Perimeter Roadway	Verify sideslopes are maintained				
5	East Perimeter Roadway	Road surface maintained				
6	East Perimeter Roadway	Verify sideslopes are maintained				
7	South Perimeter Roadway	Road surface maintained				
8	South Perimeter Roadway	Verify sideslopes are maintained				
9	West Perimeter Roadway	Road surface maintained				
10	West Perimeter Roadway	Verify sideslopes are maintained				

B-5 Semi-Annual Inspections

Date/Time: _____ **Weather Conditions:** _____

Inspector: _____ **Type of Inspection (Circle One): General Inspection or Following Sever Weather**

1. See Appendix A-2, *"Inspection Frequency Matrix",* for type of inspection and frequency (Daily/Weekly/Twice-A-Month/Monthly/Quarterly/Semi-Annual/Annual) and following severe weather.
2. See Appendix A-1 O&M Requirements Matrix for reporting/documentation requirements and maintenance activities and Appendix A-3, "Repair Response Matrix", for response time.
3. Severe Weather conditions include, but are not limited to, the following: blizzards, ice storms, tornadoes, wind measuring 50 knots (58 miles per hour) or greater, approximately 3/4-inch diameter hail or larger, frequent lightning, and 1.25 inches or greater rainfall in a 24-hour period or a high intensity shorter duration storm event with an intensity of 1 inch per hour.
4. An O&M inspection performed following a sever weather event will count as an inspection for the specified period.

7.2 MFDS Security

Number	O&M Item	Inspection Item	Satisfactory	Unsatisfactory	Required Action	Action Completed Date/Initial
1	North Perimeter Fence at Site Access	Note any signs of rust	----	----		
2	North Perimeter Fence at Site Access	Steel posts intact and anchored into concrete footers				
3	North Perimeter Fence at Site Access	Concrete footers intact				
4	North Perimeter Fence at Site Access	"Restricted Access Area" signs properly posted	----	----		
5	IRP Cap Perimeter Fence	Note any signs of rust				
6	IRP Cap Perimeter Fence	Steel posts intact and anchored into concrete footers				
7	IRP Cap Perimeter Fence	Concrete footers intact				
8	IRP Cap Perimeter Fence	"Restricted Access Area" signs properly posted				
9	EDB Emergency Spillway Traffic Control Gates	Note any signs of pealed paint or rust				
10	EDB Emergency Spillway Traffic Control Gates	Steel posts intact and anchored into concrete footers				
11	EDB Emergency Spillway Traffic Control Gates	Concrete footers intact				

7.3 Alluvial Wells

Number	O&M Item	Inspection Item	Satisfactory	Unsatisfactory	Required Action	Action Completed Date/Initial
1	Alluvial Wells[1] (14)	Operable locks and caps on steel casings				
2	Alluvial Wells[1] (14)	Steel casings free of surface damages				
3	Alluvial Wells[1] (14)	Concrete Pads free of surface damages				
4	Alluvial Wells[1] (14)	Free of silt and debris (verify with #4)				
5	Alluvial Wells[1] (14)	Measure total casing depth of each well				
6	Alluvial Wells[1] (14)	Bollards intact (structurally sounds & protects the alluvial well from damage)				

Note: 1. Indicate alluvial well identification in Required Action.

B-5 Semi-Annual Inspections

Date/Time: _____ **Weather Conditions:** _____

Inspector: _____ **Type of Inspection (Circle One): General Inspection or Following Sever Weather**

1. See Appendix A-2, *"Inspection Frequency Matrix",* for type of inspection and frequency (Daily/Weekly/Twice-A-Month/Monthly/Quarterly/Semi-Annual/Annual) and following severe weather.
2. See Appendix A-1 O&M Requirements Matrix for reporting/documentation requirements and maintenance activities and Appendix A-3, "Repair Response Matrix", for response time.
3. Severe Weather conditions include, but are not limited to, the following: blizzards, ice storms, tornadoes, wind measuring 50 knots (58 miles per hour) or greater, approximately 3/4-inch diameter hail or larger, frequent lightning, and 1.25 inches or greater rainfall in a 24-hour period or a high intensity shorter duration storm event with an intensity of 1 inch per hour.
4. An O&M inspection performed following a sever weather event will count as an inspection for the specified period.

7.4 Monitoring Wells

Number	O&M Item	Inspection Item	Satisfactory	Unsatisfactory	Required Action	Action Completed Date/Initial
1	Monitoring Wells[1] (16)	Operable locks and caps on steel casings				
2	Monitoring Wells[1] (16)	Steel casings free of surface damages				
3	Monitoring Wells[1] (16)	Concrete Pads free of surface damages				
4	Monitoring Wells[1] (16)	Free of silt and debris (verify with #4)				
5	Monitoring Wells[1] (16)	Measure total casing depth of each well				

Note: 1. Indicate monitoring well identification in Required Action.

7.6 Erosion Monitoring

Number	O&M Item	Inspection Item	Satisfactory	Unsatisfactory	Required Action	Action Completed Date/Initial
1	East Main Drainage Channel	Free of surface erosion signs				
2	East Main Drainage Channel	Monuments Undisturbed				
3	East Main Drainage Channel	Monuments Structurally Sound				
4	East Main Drainage Channel	Brass discs grouted				
5	East Main Drainage Channel	Coordinates clearly marked on survey monuments				
6	South Drainage Channel	Free of surface erosion signs				
7	West Drainage Channel	Free of surface erosion signs				
8	East Adjacent Hill Slopes	Free of surface erosion signs				
9	South Adjacent Hill Slopes	Free of surface erosion signs				
10	West Adjacent Hill Slopes	Free of surface erosion signs				

B-6 – Annual Inspection

B-6 Annual Inspection

Date/Time: _____ **Weather Conditions:** _____

Inspector: _____ **Type of Inspection (Circle One): General Inspection or Following Sever Weather**

1. See Appendix A-2, *"Inspection Frequency Matrix"*, for type of inspection and frequency (Daily/Weekly/Twice-A-Month/Monthly/Quarterly/Semi-Annual/Annual) and following severe weather.
2. See Appendix A-1 O&M Requirements Matrix for reporting/documentation requirements and maintenance activities and Appendix A-3, "Repair Response Matrix", for response time.
3. Severe Weather conditions include, but are not limited to, the following: blizzards, ice storms, tornadoes, wind measuring 50 knots (58 miles per hour) or greater, approximately 3/4-inch diameter hail or larger, frequent lightning, and 1.25 inches or greater rainfall in a 24-hour period or a high intensity shorter duration storm event with an intensity of 1 inch per hour.
4. An O&M inspection performed following a sever weather event will count as an inspection for the specified period.

3.1 Geomembrane Liner

Number	O&M Item	Inspection Item	Satisfactory	Unsatisfactory	Required Action	Action Completed Date/Initial
1	IRP Cap[1]	Sealed field seams via Airlance test				
2	IRP Cap[1]	Sealed factory seams via visual inspection (free of tears/ penetrations / thin spots)				
3	Geomembrane Liner Boots[1] (83)	Secure attachment of geomembrane liner boots				
4	Geomembrane Liner Boots[1] (83)	Boot free of deterioration (tears/penetrations/thin spots)				
5	Data Logger[2]	Verify "Dry Status" of sump via a hand measurement				

Note: 1. For repairs, see Appendix C-1 for the 45-mil reinforced polypropylene repair procedure.
2. Hand measurement shall be taken in dry sumps to verify data logger measurement.

3.2 Headwalls

Number	O&M Item	Inspection Item	Satisfactory	Unsatisfactory	Required Action	Action Completed Date/Initial
1	Headwall 'A" in NW Corner	Concrete free of cracking >1/16" wide				
2	Headwall 'A" in NW Corner	Construction joints maintained				
3	Headwall 'A' Sump in NW Corner	Free of surface spalling damaging integrity				
4	Headwall 'A' Sump in NW Corner	Secure attachment of geomembrane liner boot to liquid collection sump (no seepage points)				
5	Headwall 'B" in NW Corner	Concrete free of cracking >1/16" wide				
6	Headwall 'B" in NW Corner	Construction joints maintained				
7	Headwall 'B' Sump in NW Corner	Free of spalling damaging integrity				
8	Upstream Headwall in NE Corner	Concrete free of cracking >1/16" wide				
9	Upstream Headwall in NE Corner	Construction joints maintained				
10	Upstream Headwall Sump in NE Corner	Free of spalling damaging integrity				
11	Upstream Headwall Sump in NE Corner	Secure attachment of geomembrane liner boot to liquid collection sump (no seepage points)				
12	Upstream Headwall Sump in NE Corner	Secure seal of the trash grate / restricting plate to the headwall				
13	Downstream Headwall of NE Corner Piping System	Concrete free of cracking >1/16" wide				
14	Downstream Headwall of NE Corner Piping System	Construction joints maintained				
15	Downstream Headwall Sump of NE Corner Piping System	Free of spalling damaging integrity				

B-6 Annual Inspection

Date/Time: _____ **Weather Conditions:** _____

Inspector: _____ **Type of Inspection (Circle One): General Inspection or Following Sever Weather**

1. See Appendix A-2, *"Inspection Frequency Matrix",* for type of inspection and frequency (Daily/Weekly/Twice-A-Month/Monthly/Quarterly/Semi-Annual/Annual) and following severe weather.
2. See Appendix A-1 O&M Requirements Matrix for reporting/documentation requirements and maintenance activities and Appendix A-3, "Repair Response Matrix", for response time.
3. Severe Weather conditions include, but are not limited to, the following: blizzards, ice storms, tornadoes, wind measuring 50 knots (58 miles per hour) or greater, approximately 3/4-inch diameter hail or larger, frequent lightning, and 1.25 inches or greater rainfall in a 24-hour period or a high intensity shorter duration storm event with an intensity of 1 inch per hour.
4. An O&M inspection performed following a sever weather event will count as an inspection for the specified period.

3.3 Subsidence

Number	O&M Item	Inspection Item	Satisfactory	Unsatisfactory	Required Action	Action Completed Date/Initial
1	Permanent Site Control Monuments	Concrete pads & steel casings free of surface damages				
2	Permanent Site Control Monuments	Monuments intact				
3	Permanent Site Control Monuments	Brass plates securely attached to monuments and coordinates clearly				
4	Control Points	Points are clearly marked on liner				
5	Subsidence Monitoring[1]	Topographic survey of site to verify positive drainage over site area, to document subsidence areas & subsidence repair areas				

Note: 1. For repairs, see Appendix C-4 for the subsidence repair procedure.

B-6 Annual Inspection

Date/Time: _____ **Weather Conditions:** _____

Inspector: _____ **Type of Inspection (Circle One): General Inspection or Following Sever Weather**

1. See Appendix A-2, *"Inspection Frequency Matrix"*, for type of inspection and frequency (Daily/Weekly/Twice-A-Month/Monthly/Quarterly/Semi-Annual/Annual) and following severe weather.
2. See Appendix A-1 O&M Requirements Matrix for reporting/documentation requirements and maintenance activities and Appendix A-3, "Repair Response Matrix", for response time.
3. Severe Weather conditions include, but are not limited to, the following: blizzards, ice storms, tornadoes, wind measuring 50 knots (58 miles per hour) or greater, approximately 3/4-inch diameter hail or larger, frequent lightning, and 1.25 inches or greater rainfall in a 24-hour period or a high intensity shorter duration storm event with an intensity of 1 inch per hour.
4. An O&M inspection performed following a sever weather event will count as an inspection for the specified period.

3.4 Drainage Channels, Diversion Berms, and Anchor Trenches

Number	O&M Item	Inspection Item	Satisfactory	Unsatisfactory	Required Action	Action Completed Date/Initial
1	Interior Y-Channel	Test exposed and assessable liner field seams via Airlance test				
2	Interior Y-Channel	Visually examine factory seams (free of tears/ penetrations / thin spots)				
3	North Perimeter Drainage Channel	Test exposed and assessable liner field seams via Airlance test				
4	North Perimeter Drainage Channel	Visually examine factory seams (free of tears/ penetrations / thin spots)				
5	North Channel Emergency Spillway	Test exposed and assessable liner field seams via Airlance test				
6	North Channel Emergency Spillway	Visually examine factory seams (free of tears/ penetrations / thin spots)				
7	East Perimeter Drainage Channel	Test exposed and assessable liner field seams via Airlance test				
8	East Perimeter Drainage Channel	Visually examine factory seams (free of tears/ penetrations / thin spots)				
9	South Perimeter Drainage Channel	Test exposed and assessable liner field seams via Airlance test				
10	South Perimeter Drainage Channel	Visually examine factory seams (free of tears/ penetrations / thin spots)				
11	West Perimeter Drainage Channel	Test exposed and assessable liner field seams via Airlance test				
12	West Perimeter Drainage Channel	Visually examine factory seams (free of tears/ penetrations / thin spots)				
13	Interior Diversion Berms	Test exposed and assessable liner field seams via Airlance test				
14	Interior Diversion Berms	Visually examine factory seams (free of tears/ penetrations / thin spots)				
15	Interior Anchor Trenches	Test exposed and assessable liner field seams via Airlance test				
16	Interior Anchor Trenches	Visually examine factory seams (free of tears/ penetrations / thin spots)				
17	North Perimeter Anchor Trench	Test exposed and assessable liner field seams via Airlance test				
18	North Perimeter Anchor Trench	Visually examine factory seams (free of tears/ penetrations / thin spots)				
19	East Perimeter Anchor Trench	Test exposed and assessable liner field seams via Airlance test				
20	East Perimeter Anchor Trench	Visually examine factory seams (free of tears/ penetrations / thin spots)				
21	South Perimeter Anchor Trench	Test exposed and assessable liner field seams via Airlance test				
22	South Perimeter Anchor Trench	Visually examine factory seams (free of tears/ penetrations / thin spots)				
23	West Perimeter Anchor Trench	Test exposed and assessable liner field seams via Airlance test				
24	West Perimeter Anchor Trench	Visually examine factory seams (free of tears/ penetrations / thin spots)				

B-6 Annual Inspection

Date/Time: _____ **Weather Conditions:** _____

Inspector: _____ **Type of Inspection (Circle One): General Inspection or Following Sever Weather**

1. See Appendix A-2, *"Inspection Frequency Matrix",* for type of inspection and frequency (Daily/Weekly/Twice-A-Month/Monthly/Quarterly/Semi-Annual/Annual) and following severe weather.
2. See Appendix A-1 O&M Requirements Matrix for reporting/documentation requirements and maintenance activities and Appendix A-3, "Repair Response Matrix", for response time.
3. Severe Weather conditions include, but are not limited to, the following: blizzards, ice storms, tornadoes, wind measuring 50 knots (58 miles per hour) or greater, approximately 3/4-inch diameter hail or larger, frequent lightning, and 1.25 inches or greater rainfall in a 24-hour period or a high intensity shorter duration storm event with an intensity of 1 inch per hour.
4. An O&M inspection performed following a sever weather event will count as an inspection for the specified period.

3.5 Articulating Concrete Block (AB) System

Number	O&M Item	Inspection Item	Satisfactory	Unsatisfactory	Required Action	Action Completed Date/Initial
1	Geomembrane Liner Flap at South Y-Channel Inlet[1]	Sealed extruded seams (the liner flap extruded to the IRP Cap liner) via the v-box test				
2	Geomembrane Liner Flap at North Y-Channel Inlet[1]	Sealed extruded seams (the liner flap extruded to the IRP Cap liner) via the v-box test				
3	Upstream SE Perimeter Channel Dead-man	Free of cracking >1/16-inch width				
4	Upstream SE Perimeter Channel Dead-man	Free of surface spalling damaging integrity				
5	Upstream SE Perimeter Channel Dead-man	Construction joints maintained				
6	Southern Dead-man at Y-Channel Inlet[2]	IRP Cap liner is free of tears, penetrations, or thin spots				
7	Southern Dead-man at Y-Channel Inlet[2]	Liner & gasket material are securely attached to the dead-man structure at the batten bar (no seepage points)				
8	Southern Dead-man at Y-Channel Inlet[2]	Concrete free of cracking >1/16" wide				
9	Southern Dead-man at Y-Channel Inlet[2]	Construction joints maintained				
10	Southern Dead-man at Y-Channel Inlet[2]	Free of surface spalling damaging integrity				
11	Southern Dead-man at Y-Channel Inlet[2]	Cementitious fill material free of spalling or void spaces allowing water to pool or erosion of adjacent fill material				
12	Northern Dead-man at Y-Channel Inlet[2]	IRP Cap liner is free of tears, penetrations, or thin spots				
13	Northern Dead-man at Y-Channel Inlet[2]	Liner & gasket material are securely attached to the dead-man structure at the batten bar (no seepage points)				
14	Northern Dead-man at Y-Channel Inlet[2]	Concrete free of cracking >1/16" wide				
15	Northern Dead-man at Y-Channel Inlet[2]	Construction joints maintained				
16	Northern Dead-man at Y-Channel Inlet[2]	Free of surface spalling damaging integrity				
17	Northern Dead-man at Y-Channel Inlet[2]	Cementitious fill material free of spalling or void spaces allowing water to pool or erosion of adjacent fill material				

Note: 1. The dead-man structures at the South & North inlet of the interior Y-channel are covered with geomembrane liner flaps. Upon identification of tears/penetrations/thin spots, the Geomembrane Liner Flap shall be opened to inspect the dead-man structures at the South & North inlets. Remove any accumulated liquids (note in the Required Action) & proceed with inspection items 6 through 17.

2. Upon repair, reinstall the Geomembrane Liner Flap pursuant to Section 3.5.3.1.

B-6 Annual Inspection

Date/Time: _____ **Weather Conditions:** _____

Inspector: _____ **Type of Inspection (Circle One): General Inspection or Following Sever Weather**

1. See Appendix A-2, *"Inspection Frequency Matrix",* for type of inspection and frequency (Daily/Weekly/Twice-A-Month/Monthly/Quarterly/Semi-Annual/Annual) and following severe weather.
2. See Appendix A-1 O&M Requirements Matrix for reporting/documentation requirements and maintenance activities and Appendix A-3, "Repair Response Matrix", for response time.
3. Severe Weather conditions include, but are not limited to, the following: blizzards, ice storms, tornadoes, wind measuring 50 knots (58 miles per hour) or greater, approximately 3/4-inch diameter hail or larger, frequent lightning, and 1.25 inches or greater rainfall in a 24-hour period or a high intensity shorter duration storm event with an intensity of 1 inch per hour.
4. An O&M inspection performed following a sever weather event will count as an inspection for the specified period.

3.6 Northeast Corner Piping

Number	O&M Item	Inspection Item	Satisfactory	Unsatisfactory	Required Action	Action Completed Date/Initial
1	Manhole #1	Steps securely anchored in walls				
2	Manhole #1	Precast concrete manhole free of debris and obstructions				
3	Manhole #2	Steps securely anchored in walls				
4	Manhole #2	Precast concrete manhole free of debris and obstructions				
5	Piping	If pipe damage is suspected - Verify interior piping free of debris and obstructions (signaling a possible cave-in)				

3.7 Former Leachate Storage Facility Area

Number	O&M Item	Inspection Item	Satisfactory	Unsatisfactory	Required Action	Action Completed Date/Initial
1	LSF Tank 1	Secure attachment of geomembrane liner boots				
2	LSF Tank 1	Boot free of deterioration (tears/penetrations/thin spots)				
3	LSF Tank 2	Secure attachment of geomembrane liner boots				
4	LSF Tank 2	Boot free of deterioration (tears/penetrations/thin spots)				
5	LSF Tank 3	Secure attachment of geomembrane liner boots				
6	LSF Tank 3	Boot free of deterioration (tears/penetrations/thin spots)				
7	LSF Tank 4	Secure attachment of geomembrane liner boots				
8	LSF Tank 3	Boot free of deterioration (tears/penetrations/thin spots)				
9	Rectifier Box for the Cathodic Protection System	Annual Survey by NACE Technician Record the Direct Current **Reading** _____				
10	Rectifier Box for the Cathodic Protection System	Annual Survey by NACE Technician Record the Amps Output **Reading** _____				

Note: 1. Opening of LSF Tank 1 access & vent riser shall be in accordance with the Commonwealth Procedures.

B-6 Annual Inspection

Date/Time: _____ **Weather Conditions:** _____

Inspector: _____ **Type of Inspection (Circle One): General Inspection or Following Sever Weather**

1. See Appendix A-2, *"Inspection Frequency Matrix",* for type of inspection and frequency (Daily/Weekly/Twice-A-Month/Monthly/Quarterly/Semi-Annual/Annual) and following severe weather.
2. See Appendix A-1 O&M Requirements Matrix for reporting/documentation requirements and maintenance activities and Appendix A-3, "Repair Response Matrix", for response time.
3. Severe Weather conditions include, but are not limited to, the following: blizzards, ice storms, tornadoes, wind measuring 50 knots (58 miles per hour) or greater, approximately 3/4-inch diameter hail or larger, frequent lightning, and 1.25 inches or greater rainfall in a 24-hour period or a high intensity shorter duration storm event with an intensity of 1 inch per hour.
4. An O&M inspection performed following a sever weather event will count as an inspection for the specified period.

4.1 Principal Spillway

Number	O&M Item	Inspection Item	Satisfactory	Unsatisfactory	Required Action	Action Completed Date/Initial
1	Riser Pipe	Secure attachment to foundation				
2	Riser Pipe	Steel pipe free of rust indications				
3	H-Flume / Fiberglass portion	Free of structural defects				
4	H-Flume / Concrete portion	Construction joints maintained				
5	H-Flume / Concrete portion	Free of cracking >1/16-inch width				
6	H-Flume / Concrete portion	Free of surface spalling damaging the integrity				
7	Ultrasonic Flow Recorder and Rain Gauge	Ultrasonic Flow Recorder and rain gauge intact and secure to H-Flume				
8	Riprap[1]	Minimum 1' depth				
9	Riprap	Free of brush growth				

Note: 1. Riprap measurements shall be taken at representative locations.

4.2 Emergency Spillway

Number	O&M Item	Inspection Item	Satisfactory	Unsatisfactory	Required Action	Action Completed Date/Initial
1	Concrete Pad	Construction joints maintained				
2	Concrete Pad	Free of cracking > 1/16-inch width				
3	Concrete Pad	Free of surface spalling damaging the integrity				
4	Gabion Basket System[1]	Indications of rust which adversely affects performance				
5	Gabion Basket System	Free of brush growth				

Note: 1. To maintain integrity, a spray rust preventative product may be used on an as needed basis & note in the Required Action.

4.3 Embankment

Number	O&M Item	Inspection Item	Satisfactory	Unsatisfactory	Required Action	Action Completed Date/Initial
1	Embankment	Sideslopes are maintained				
2	Embankment	Free of brush growth				

B-6 Annual Inspection

Date/Time: _____ **Weather Conditions:** _____

Inspector: _____ **Type of Inspection (Circle One): General Inspection or Following Sever Weather**

1. See Appendix A-2, *"Inspection Frequency Matrix",* for type of inspection and frequency (Daily/Weekly/Twice-A-Month/Monthly/Quarterly/Semi-Annual/Annual) and following severe weather.
2. See Appendix A-1 O&M Requirements Matrix for reporting/documentation requirements and maintenance activities and Appendix A-3, "Repair Response Matrix", for response time.
3. Severe Weather conditions include, but are not limited to, the following: blizzards, ice storms, tornadoes, wind measuring 50 knots (58 miles per hour) or greater, approximately 3/4-inch diameter hail or larger, frequent lightning, and 1.25 inches or greater rainfall in a 24-hour period or a high intensity shorter duration storm event with an intensity of 1 inch per hour.
4. An O&M inspection performed following a sever weather event will count as an inspection for the specified period.

4.4 Basin Area

Number	O&M Item	Inspection Item	Satisfactory	Unsatisfactory	Required Action	Action Completed Date/Initial
1	Riprap	Free of brush growth				
2	Riprap[1]	Minimum 1' depth				
3	Gabion Basket System[2]	Indications of rust which adversely affects performance				
4	Gabion Basket System	Free of brush growth				

Note: 1. Riprap measurements shall be taken at representative locations.
2. To maintain integrity, a spray rust preventative product may be used on an as needed basis & note in the Required Action.

4.4.3 Y-Channel Outfall

Number	O&M Item	Inspection Item	Satisfactory	Unsatisfactory	Required Action	Action Completed Date/Initial
1	Outfall Structure	Concrete free of cracking >1/16" wide				
2	Outfall Structure	Construction joints maintained				
3	Outfall Structure	Free of surface spalling damaging the integrity				
4	Geomembrane Liner Flap at Inlet of Outfall Structure	Sealed extruded seams (the liner flap extruded to the IRP Cap liner) via the v-box test				

5.2 South Drain Inlet Area

Number	O&M Item	Inspection Item	Satisfactory	Unsatisfactory	Required Action	Action Completed Date/Initial
1	Upstream Headwall	Construction joints maintained				
2	Upstream Headwall	Free of cracking > 1/16-inch width				
3	Upstream Headwall	Free of surface spalling damaging the integrity				
4	Downstream Headwall	Construction joints maintained				
5	Downstream Headwall	Free of cracking > 1/16-inch width				
6	Downstream Headwall	Free of surface spalling damaging the integrity				
7	Riprap	Free of brush growth				
8	Riprap[1]	Minimum 1' depth				
9	Gabion Basket System	Free of brush growth				
10	Gabion Baskets[2]	Indications of rust which adversely affects performance				

Note: 1. Riprap measurements shall be taken at representative locations.
2. To maintain integrity, a spray rust preventative product may be used on an as needed basis & note in the Required Action.

B-6 Annual Inspection

Date/Time: _____ **Weather Conditions:** _____

Inspector: _____ **Type of Inspection (Circle One): General Inspection or Following Sever Weather**

1. See Appendix A-2, *"Inspection Frequency Matrix"*, for type of inspection and frequency (Daily/Weekly/Twice-A-Month/Monthly/Quarterly/Semi-Annual/Annual) and following severe weather.
2. See Appendix A-1 O&M Requirements Matrix for reporting/documentation requirements and maintenance activities and Appendix A-3, "Repair Response Matrix", for response time.
3. Severe Weather conditions include, but are not limited to, the following: blizzards, ice storms, tornadoes, wind measuring 50 knots (58 miles per hour) or greater, approximately 3/4-inch diameter hail or larger, frequent lightning, and 1.25 inches or greater rainfall in a 24-hour period or a high intensity shorter duration storm event with an intensity of 1 inch per hour.
4. An O&M inspection performed following a sever weather event will count as an inspection for the specified period.

6.3 SE Cap Riprap Outlet

Number	O&M Item	Inspection Item	Satisfactory	Unsatisfactory	Required Action	Action Completed Date/Initial
1	Riprap Outlet	Free of bush growth				
2	Riprap Outlet	Check for maintained side-slopes				

6.4 SE Cap IRP Cap Tie-in

Number	O&M Item	Inspection Item	Satisfactory	Unsatisfactory	Required Action	Action Completed Date/Initial
1	IRP Cap Tie-in	Integrity of anchor trench				

7.8 Survey Tower

Number	O&M Item	Inspection Item	Satisfactory	Unsatisfactory	Required Action	Action Completed Date/Initial
1	Survey Tower	Secure concrete footers				
2	Survey Tower	Concrete footers free of surface damages				
3	Survey Tower	Tower secure and stable				

7.9 Miscellaneous Turf Areas

Number	O&M Item	Inspection Item	Satisfactory	Unsatisfactory	Required Action	Action Completed Date/Initial
1	Borrow Pit - Turf[1]	Maintained side-slopes				
2	Stockpile Pit - Turf[1]	Maintained side-slopes				
3	Areas around the IRP Cap - Turf[1]	Maintained side-slopes				

Note: 1. Indicate designated area (Figure 7-4) in Required Action.

Appendix C –Repair Procedures

C-1 – Geomembrane Liner Repair Procedure

C-1 Geomembrane Liner Repair Procedure

Damage Discovery Date[1]	_____	**Panel Section Number**	_____
Repair Date[1]	_____	**Location**[2]	_____
Weather Conditions	_____	**Patch Number**[3]	_____
Temperature (41F <T <95F)	_____	**Site Coordinator**	_____

Procedure:

1 Upon identification of damaged geomembrane liner, repair shall be performed within 4 work days or prior tot the next forecasted rain event.
2 Document size of damaged material and panel location with reference to Figure C-1; Geomembrane Panel Layout.
3 Collect necessary materials.
4 QC personnel shall complete Attachment 02270-3 (Manufacturer's Certified raw material QC Certification).
5 QC personnel shall complete Attachment 02270-4 (Manufacturer's Certified factory seam testing results.).
6 Inspect material to be used for repairs and receive QC personnel approval.
7 Move to repair location. Use only approved equipment on the IRP Cap area.
8 Determine damaged area of liner to be removed.
9 Remove damaged area of liner material. Assign patch number and specific location of area to be repaired to QC personnel.
10 If exposed, inspect the subgrade. QC personnel shall document conditions using Attachment 02270-1.
11 Address deficiencies in subgrade condition in accordance with Specification 02300 - Earthwork. Document "Acceptance" of soil subgrade by Installer/Site Coordinator. QC personnel shall document conditions using Attachment 02270-2.
12 Upon acceptance of Subgrade, QC personnel shall document "Acceptance" of soil subgrade using Attachment 02270-2.
13 If soil beneath IRP Cap is "Unacceptable," proceed with Appendix C-2, Subsidence Repair Procedure.
14 Clean area to be repaired.
15 Prepare liner repair material for installation. Repair area material must extend six inches beyond damaged area and have rounded corners.
16 Test extrusion welder by producing acceptable trial seams. Coordinate this activity with QC personnel.
17 Extrusion weld repair material in place. This activity must be performed by a liner certified liner technician.
18 Perform required testing of repaired area. Test results shall be documented using Attachment 02270-5.
19 Clean work area.
20 Perform a complete inspection of the liner in areas which were crossed by heavy equipment. Note punctures, tears, and thin spots.
21 If damage to the liner by heavy equipment is detected, contact Site Coordinator and initiate corrective action.
22 QC personnel shall perform final inspection of geomembrane liner repair.
23 Upon QC inspection, review the QC Checklist with QC personnel to ensure proper documentation is provided for the repair.

Personnel Requirements	Training Requirements			
	40 Hour OSHA	8 Hour Refresher	Operator's License	Liner Welder Certification
Equipment Operator (If required)	X	X	X	
Liner Technician	X	X		X
Site Coordinator	X	X		
QC Personnel[8]	X	X		X

Materials Requirements[9]

45-mil reinforced polypropylene liner
Cleaning Supplies (cleaners, rags, scraper, etc)
Paint Marking Stick
Caulk
Writing Materials

Equipment Requirements

Extrusion Welder
Power Source
Extension cords
Measuring Tape
Vacuum Box
Liner Knife
Field Tensiometer
Anchors
Equipment for moving liner materials

Notes:

1 See Appendix B-3 and B-6.
2 Example: From NE corner of Panel go 35' South, begin patch to 65' South, 27' West, 65' North, 27' East.
3 See Figure C-1; Geomembrane Panel Layout.
4 Attachments are in Specification 02270 - Geomembrane.
5 Attachments shall be attached to the QC Checklist for documentation.
6 See Page 2 of 2 for QC Checklist.
7 Final QC inspection shall be performed within 2 work days of repair completion.
8 QC inspection shall be performed by QC personnel but not by the operator or laborer performing the repair.
9 See Appendix D for materials and equipment, at a minimum, which are to be on-hand at MFDS and replenished/maintained as needed.
10 All health and safety procedures shall be in accordance with the Site Specific Health and Safety Plan.

C-1 Geomembrane Liner Procedure QC Checklist

Damage Discovery Date[1]		Panel Section Number	
Repair Date[1]		Location[2]	
Weather Conditions		Patch Number[3]	
Temperature (41F <T <95F)		Site Coordinator	

Requirements	Specification[4]	Section	Documents Required	Form/Signatory	Forms Attach or on File[5]
Manufacturers Submittals[6]					
Date(s)	2270	1.3.1	Manufacturer's Certified Raw/sheet Materials, QC Certification	Attachment 02270-3/Manufacturer's Representative	F
Roll Number(s)	2270	1.3.6	Certified Test results on Factory seams.	Attachment 02270-4/Manufacturer Supplied/ Manufacturer's Representative	F
Personnel/Testing Qualifications	2270	1.3.5	Certifications of Workers, Inspectors, testing Lab	File Copy of Certifications	F
Material Inspection	2270	3.1.2	Bill of Lading	None/Site Coordinator	F
Material Storage	2270	3.1.3	None	None	
Prework					
Base Material Inspection	2270	3.2.1	Subgrade Checklist (If exposed)	2270-1/QC Personnel	A
Base Material Certification	2270	3.2.1	Certification of Acceptance of Soil Subgrade By Installer	2270-2/Site Coordinator/Installer and QC Personnel	A
Installation					
Deployment	2270	3.3.1	None		
Equipment (heavy)	2270	3.3.1	None		
Welders	2270	3.3.3	None		
Placement	2270	3.3.1, 2, 4, 5	None		
Anchors	2270	3.3.6	None		
Quality Control (Applicable to geomembrane liner repair)					
Shipping and Storage	2270	4.1	Bill of Lading/storage method and location		F
Inspection	2270	4.4.1, 2, 3, 4	Installation Inspection	Attachment 2270-5/Site Coordinator	A
Testing (Materials)	2270	4.2			
Testing (Installation)	2270	4.5.1, 2, 3, 4,		Attachment 2270-5/Site Coordinator	A
Raw Materials	2270	1.3.1	Manufacturer's Certified Raw/sheet Materials, QC Certification	Attachment 02270-3/Manufacturer's Representative	F
Factory Seams	2270	4.5.2	Factory Seam Inspection Report	Attachment 2270-4/Manufacturer's Representative	F
Trial Seams	2270	4.5.3	None		
Field Seams	2270	4.5.4/4.5.4.1, 2/4.5.5			
Final Certification	2270	4.5.6	Installation Inspection	Attachment 2270-5/Site Coordinator	A

Personnel Requirements	Training Requirements				
	40 Hour OSHA	8 Hour Refresher	Operator's License	Liner Welder Certification	Crew Signature
Equipment Operator (If required)	X	X	X		
Liner Technician	X	X		X	
Site Coordinator	X	X			
QC Personnel[9]	X	X		X	

Notes:

1 See Appendix B-3 and B-6.
2 Example: From NE corner of Panel go 35' South, begin patch to 65' South, 27' West, 65' North, 27' East.
3 See Figure C-1; Geomembrane Panel Layout.
4 Specification 02270 - Geomembrane.
5 Attached (A) - form must be attached to this QC Checklist form, File (F) - Required documents should be on file and readily available for inspection. Attach any site photographs, if needed, to the QC Checklist.
6 Note delivery date and roll numbers of material used for repairs.
7 Final QC inspection shall be performed within 2 work days of repair completion.
8 QC inspection shall be performed by QC personnel but not by the operator or laborer performing the repair.
9 All health and safety procedures shall be in accordance with the Site Specific Health and Safety Plan.

C-2 – Sump Lid and Data Logger Removal/ Reinstallation Procedure

C-2 Sump Lid Removal/Reinstallation Procedure

1.0 Sump Lid

Removal of sump lid (blind flange assembly)

- Remove data logger in accordance with manufacturer data (Appendix E-3),
- Remove bolts from sump blind/slip flange assembly,
- Remove blind flange from sump slip flange,
- Remove and dispose of gasket.

Re-install sump lid (blind flange assembly)

- Place new non-asbestos type gasket on raised ring directly adjacent to the bolt circle of sump slip flange,
- Align blind flange to sump slip flange using index mark (">") stamped into blind flange with corresponding index mark ("<") stamped on sump slip flange,
- Re-insert and re-tighten bolts in sump blind/slip flange assembly,
- Re-install data logger in accordance with manufacturer recommendations ((manual is enclosed in attachment).

Notes:

1. Refer to AB-12, AB-13, and AB-14 for location of the sump extensions, sump tables, and sump details, respectively.
2. Blind flanges are stamped with an elevation reference mark ("X"). Elevations listed for top of sumps (flange) on AB-13 correspond to these mark locations. In order to obtain an elevation at the rim of the manual measuring ports, measure up from the elevation reference mark to the rim of the manual measuring port and add this distance (in feet) to the listed top of sump elevation.
3. Sump identification numbers are stamped into blind flange.
4. PVC well vents and manual measuring ports are threaded into ports on blind flange. It is not necessary to remove well vent or manual measuring ports when removing or re-installing blind flange/data logger assembly. However, care should be taken not to break off vents when performing any maintenance or operating in the vicinity of sumps.
5. All activities shall be performed in accordance with the Site Specific Health and Safety Plan during the IMP.

C-3 – Concrete Repair Procedure

C-3 Concrete Repair Procedure

Repair Date[1] _____ Site Coordinator _____
Weather Conditions _____
Temperature _____

Personnel Requirements	Training Requirements		
	40 Hour OSHA	8 Hour Refresher	Operator's License
Equipment Operator (If required)	X	X	X
Laborer	X	X	
Site Coordinator	X	X	
QC Personnel[3]	X	X	

Notes:

1. See Appendix B for inspection forms.
2. Final QC inspection shall be performed 2 workdays upon repair completion.
3. The QC inspection shall be performed by QC personnel but not the operator or laborer performing the repair.
4. All health and safety procedures shall be in accordance with the Site Specific Health and Safety Plan.
5. Concrete repair and patch activities shall be performed in accordance with manufacturer's specifications and with reference to Specification 03100 – Structural Concrete Formwork, Specification 03200 – Concrete Reinforcement, and Specification 03300 – Concrete.

This Concrete Repair Procedure addresses minor concrete repairs and joint sealant repairs but not concrete replacement when you have substantial deterioration. The U.S. Corps of Engineers procedure EM 1110-2-2002 Evaluation and Repair of Concrete Structures (www.usace.army.mil/inet/usace-docs/eng-manuals) shall be used as a reference for substantial concrete replacement and as denoted in the procedure. Section 6.4 – Conventional Concrete Replacement addresses substantial concrete replacement and Section 8-3 addresses substantial concrete repairs in stilling basins. Substantial concrete replacement is defined as replacement of defective concrete with a new conventional concrete mixture, of suitable proportions, that will become an integral part of the base of concrete.

Procedure

1.1 SURFACE PREPARATION & DETAILING

Prior to patching, all surfaces must be prepared in the manner that follows:

1. Remove all unsound concrete, using lightweight demolition hammers, not to exceed 18 pounds in weight. All removals to be performed in accordance with 1999 ACI REPMAN (Concrete Repair Manual), which shall be a part of these specifications, with regard to removal geometry, exposing, undercutting and cleaning of embedded reinforcement, and conditioning of edges and surfaces. The edge of the defective area shall be cut or chipped straight and at right angles to the surface, or slightly undercut to provide a key at the edge of the patch. It is often problematic to determine when all the damaged or deteriorated material has been removed. As a practical matter, material should continue to be removed until aggregate particles are being broken rather than simply being removed from the cement matrix. No featheredges shall be permitted. The surface can be left rough as opposed to smooth for proper bond. Following demolition, test surfaces for alkalinity/carbonation with a 1-2% solution of phenolphthalein. Surfaces which do not indicate alkalinity (solution turns pink) shall require further demolition.

2. Pressure wash all indicated surfaces using 3000-4000 psi water blast, as required to remove all dust and dirt. Abrasive shall be used in combination with water when cleaning repair cavities, as required to eliminate micro- cracked surface materials resulting from demolition. No water with concrete dust shall be allowed to remain on any surface following washing, and must be immediately removed, prior to drying and re-hardening.

3. The result of this preparation shall render a surface clean, meaning having complete exposure of sound original material without any deposits of contaminants, foreign matter or loose material, which could affect the bond or long-term durability of the surface and the patching compound.

   Bonding Agents

   The general guidance is that small thin patches (less than 2 inches [50 mm]) should receive a bonding coat while thicker replacements do not require a bonding agent. Typical bonding agents are simply grout mixtures of cement slurry or equal volumes of Portland cement and fine aggregate mixed with water to the consistency of thick cream. The grout should be worked into the surface with stiff brooms or brushes, and must not be allowed to dry out before the concrete is placed. The bonding agent should not be applied more than 10 minutes ahead of the concrete placement. The manufacturer's recommendations must be followed when applying a bonding agent.

   Anchors

   Dowels may be required in some situations to anchor the repair material to the existing concrete substrate. ACI 355.IR summarizes anchor types and performance. Anchors used in this type of repair are installed in holes drilled in the concrete substrate and can be classified as either bonded or expansion anchors.

1.2 Crack Repair

1. Patching compounds are not to be used to bridge working cracks or joints. Prior to crack repair, contractor shall engage the services of the crack sealant manufacturer's technical representative to assist in the selection of the appropriate grades of crack sealant for each area.

2. Cracks 1/16-inch wide or greater shall be grooved out to a nominal ½-inch x ½-inch, and filled with crack sealant. Cracks less than 1/16-inch shall be performed following pressure washing and drying by gravity filling with elastomeric crack sealant.

3. A retaining plate shall be used to confine the sealant for cracks in low-head hydraulic structures where water movement or pressure exits structures. A simple retaining plate can be made by positioning a metal strip across the crack and fastening it to expandable anchors or grouted bolts installed in the concrete along the side of the crack. To maintain hydraulic efficiency in some structures, it may be necessary to cut the concrete surface adjacent to the crack and place the retaining plate flush with the original flow lines. Refer to USACE EM 1110-2-2002 Section 6-9 (c) 4 for examples of a retaining plate.

1.3 Priming of Reinforcing Steel

1. Any steel reinforcement exposed in the course of removing unsound materials shall be cleaned and prepared as follows:

   Cleaning Reinforcing Steel

   The steel should be thoroughly cleaned of all loose rust and foreign matter before the replacement concrete is placed. For limited areas, wire brushing or other hand methods of cleaning are acceptable. For larger areas, dry sandblasting is the preferred method. The sandblasting must remove all the rust from the underside of the reinforcing bars. The operator should be suited with a respiratory device because of the health hazard associated with dry blasting. There is always the possibility that freshly cleaned reinforcing steel will rust between the time it is cleaned and the time

that the next concrete is placed. If the rust that forms is tightly bonded to the steel, there is no need to take further action. If the rust is loosely bonded or in any way inhibits bonding between the steel and concrete, the reinforcing bars must be cleaned again immediately before concrete placement.

2. Following cleaning and prior to patching, apply cementitious corrosion inhibitive primer and bonding agent to all steel surfaces in accordance with manufacturer's specifications. Care must be taken to create a continuous coating on the full surface, including the underside of the undercut reinforcement. Observe manufacturer's specifications with regard to minimum and maximum timing "windows" for patching after application of primer.

1.4 Concrete Patching

1. Based on size of patch, either concrete or Portland cement-based mortar shall be used. ACI 546R-96, Concrete Repair Guide, provides guidance on repair material options. Shallow patches less than 1-inch in depth shall be filled with a patching mortar consisting of a sand-cement mixture (typically 1 part cement to at least 3 parts sand). The concrete or Portland cement-based mortar shall be placed in layers not more than 1/2-inch thick, with each layer given a scratch finish to improve bond with the subsequent layer. The packed mortar should be left slightly protruding above the adjacent existing surface, left to harden for 2 hours, and screeded flush. The final layer can be finished to match the surrounding concrete finish. Deep patches that are greater than 1-inch in depth shall be filled with concrete mix that has aggregate with 1/2 -inch (maximum) diameter aggregate.

2. Following preparation, as specified in Section 1.1, the contractor shall maintain work area in a clean condition, including materials, equipment and workers' footwear, to avoid tracking in of contaminants, dirt, dust, mud or other materials which may interfere with adhesion and durability of repairs.

3. Prior to patching, all repair areas to be patched shall be kept continuously wet for at least 20 minutes prior to application of patching compound. Before placing patch, excess water shall be blown, vacuumed or otherwise removed from the surface, leaving the surface damp or saturated/surface dry.

4. Brush on a bonding agent as required.

6. When placing the patching compound or concrete mix, care shall be taken to assure that all corners and gaps under reinforcing steel and entire cavity profile is completely filled and properly compacted to prevent formation of voids or unbonded areas. "Work" the material into corners and gaps, and onto cavity using pressure on the trowel to assure good contact between patch and substrates.

7. Do not retemper material which has begun to set and discard any unused material after 20 minutes. Do not excessively wet patch surfaces after placement or as an aid to trowelling. Limit surface water addition to light misting and do not wet or rework repeatedly.

8. Observe the curing requirements for each day's working conditions, as specified by the manufacturer. Do not extend wet curing beyond the maximum specified. Do not open to traffic or expose to weather until adequate strength has been reached. Ambient temperatures should be 45°F or higher for 48 hours during and subsequent to concrete placement.

1.5 Joint Maintenance

Field-molded sealant will require periodic maintenance to maintain an effective seal and to minimize deterioration of the structure.

2. The same field-molded sealant may be used for minor touchups of small gaps or hard spots in the existing field-molded sealant.

Extensive damage of the existing field-molded sealant requires removal and replacement of the filed-molded sealant. The damaged sealant which remains in the joint shall be removed by hand tools. The surface shall be prepared according to manufacturers recommendations for the filed-molded sealant.

C-4 – Subsidence Repair Procedure

C-4 Subsidence Repair Procedure

Damage Discovery Date[1]	_____	**Panel Section Number**	_____
Repair Date[1]	_____	**Location**[2]	_____
Weather Conditions	_____	**Patch Number**[3]	_____
Temperature (41F <T <95F)	_____	**Site Coordinator**	_____

Procedure:

1 Once the Subgrade area is greater than 315 square feet or has a depth of accumulated liquid greater than 3 inches, the area shall be roped off and the accumulated liquids shall be removed within 24 hours.
2 Document conditions, location of subsidence, and pertinent details on the Subsidence Tracking Form (Page 3 of 3).
3 Repair shall be completed within 60 days (or as necessary to prevent health and safety concerns and potential liner damage) of determination of subsidence area meeting the criteria of in #1. Any additional accumulated liquids shall be removed to prevent damage to the geomembrane liner.
4 Collect necessary materials.
5 QC personnel shall complete Attachment 02270-3 (Manufacturer's Certified raw material QC Certification).
6 QC personnel shall complete Attachment 02270-4 (Manufacturer's Certified factory seam testing results.).
7 Inspect material to be used for repairs and receive QC personnel approval.
8 Move to repair location. Use only approved equipment on the IRP Cap area.
9 Determine damaged area of liner to be removed.
10 Remove damaged area of liner material. Assign patch number and specific location of area to be repaired to QC personnel.
12 Address deficiencies in subgrade condition in accordance with Specification 02300 - Earthwork. Document "Acceptance" of soil subgrade by Installer/Site Coordinator. QC personnel shall document conditions using Attachment 02270-2.
13 Upon acceptance of subgrade, QC personnel shall document "Acceptance" of soil subgrade using Attachment 02270-2.
14 If soil beneath IRP Cap is "Unacceptable," proceed with Appendix C-2, Subsidence Repair Procedure.
15 Clean area to be repaired.
16 Prepare liner repair material for installation. Repair area material must extend six inches beyond damaged area and have rounded corners.
17 Test extrusion welder by producing acceptable trial seams. Coordinate this activity with QC personnel.
18 Extrusion weld repair material in place. This activity must be performed by a liner certified liner technician.
19 Perform required testing of repaired area. Test results shall be documented using Attachment 02270-5.
20 Clean work area.
21 Perform a complete inspection of the liner in areas which were crossed by heavy equipment. Note punctures, tears, and thin spots.
22 If damage to the liner by heavy equipment is detected, contact Site Coordinator and initiate corrective action.
23 QC personnel shall perform final inspection of geomembrane liner repair.
24 Upon QC inspection, review the QC Checklist with QC personnel to ensure proper documentation is provided for the repair.

Personnel Requirements	Training Requirements			
	40 Hour OSHA	**8 Hour Refresher**	**Operator's License**	**Liner Welder Certification**
Equipment Operator (If required)	X	X	X	
Liner Technician	X	X		X
Site Coordinator	X	X		
QC Personnel[8]	X	X		X

Materials Requirements[9]

45-mil reinforced polypropylene liner
Cleaning Supplies (cleaners, rags, scraper, etc)
Paint Marking Stick
Caulk
Writing Materials

Equipment Requirements

Extrusion Welder
Power Source
Extension cords
Measuring Tape
Vacuum Box
Liner Knife
Field Tensiometer
Anchors
Equipment for moving liner materials

Notes:

1 See Appendix B-3 and B-6.
2 Example: From NE corner of Panel go 35' South, begin patch to 65' South, 27' West, 65' North, 27' East.
3 See Figure C-1; Geomembrane Panel Layout in Appendix C-1.
4 Attachments are in Specification 02270 - Geomembrane.
5 Attachments shall be attached to the QC Checklist for documentation.
6 See Page 2 of 2 for QC Checklist.
7 Final QC inspection shall be performed within 2 work days of repair completion.
8 QC inspection shall be performed by QC personnel but not by the operator or laborer performing the repair.
9 See Appendix D for materials and equipment, at a minimum, which are to be on-hand at MFDS and replenished/maintained as needed.
10 All health and safety procedures shall be in accordance with the Site Specific Health and Safety Plan.

C-4 Subsidence Repair Procedure

Damage Discovery Date[1]		**Panel Section Number**	
Repair Date[1]		**Location**[2 & 3]	
Weather Conditions		**Patch Number**[4]	
Temperature (41F <T <95F)		**Site Coordinator**	

Requirements	Specification[5]	Section	Documents Required	Form/Signatory	Forms Attach or on File[6]
			Manufacturers Submittals[7]		
Date(s)	2270	1.3.1	Manufacturer's Certified Raw/sheet Materials, QC Certification	Attachment 02270-3/Manufacturer's Representative	F
Roll Number(s)	2270	1.3.6	Certified Test results on Factory seams.	Attachment 02270-4/Manufacturer Supplied/ Manufacturer's Representative	F
Personnel/Testing Qualifications	2270	1.3.5	Certifications of Workers, Inspectors, testing Lab	File Copy of Certifications	F
Material Inspection	2270	3.1.2	Bill of Lading	None/Site Coordinator	F
Material Storage	2270	3.1.3	None	None	
			Prework		
Base Material Inspection	2270	3.2.1	Subgrade Checklist (If exposed)	2270-1/QC Personnel	A
Base Material Certification	2270	3.2.1	Certification of Acceptance of Soil Subgrade By Installer	2270-2/Site Coordinator/Installer and QC Personnel	A
			Installation		
Deployment	2270	3.3.1	None		
Equipment (heavy)	2270	3.3.1	None		
Welders	2270	3.3.3	None		
Placement	2270	3.3.1, 2, 4, 5	None		
Anchors	2270	3.3.6	None		
			Quality Control (Applicable to geomembrane liner repair)		
Shipping and Storage	2270	4.1	Bill of Lading/storage method and location		F
Inspection	2270	4.4.1, 2, 3, 4	Installation Inspection	Attachment 2270-5/Site Coordinator	A
Testing (Materials)	2270	4.2			
Testing (Installation)	2270	4.5.1, 2, 3, 4,		Attachment 2270-5/Site Coordinator	A
Raw Materials	2270	1.3.1	Manufacturer's Certified Raw/sheet Materials, QC Certification	Attachment 02270-3/Manufacturer's Representative	F
Factory Seams	2270	4.5.2	Factory Seam Inspection Report	Attachment 2270-4/Manufacturer's Representative	F
Trial Seams	2270	4.5.3	None		
Field Seams	2270	4.5.4/4.5.4.1, 2/4.5.5			
Final Certification	2270	4.5.6	Installation Inspection	Attachment 2270-5/Site Coordinator	A

Personnel Requirements	Training Requirements				
	40 Hour OSHA	8 Hour Refresher	Operator's License	Liner Welder Certification	Crew Signature
Equipment Operator (If required)	X	X	X		
Liner Technician	X	X		X	
Site Coordinator	X	X			
QC Personnel[11]	X	X		X	

Notes:

1 See Appendix B-3 and B-6.
2 Example: From NE corner of Panel go 35' South, begin patch to 65' South, 27' West, 65' North, 27' East.
3 Document conditions, location of subsidence, and pertinent details on the Subsidence Tracking Form (Page 3 of 3).
4 See Figure C-1; Geomembrane Panel Layout.
5 Specification 02270 - Geomembrane.
6 Attached (A) - form must be attached to this QC Checklist form, File (F) - Required documents should be on file and readily available for inspection. Attach any site photographs, if needed, to the QC Checklist.
7 Note delivery date and roll numbers of material used for repairs.
8 Earthwork placement for subsidence repair shall be in accordance with Specification 02300- Earthwork.
9 Final QC inspection shall be performed within 2 work days of repair completion.
10 QC inspection shall be performed by QC personnel but not by the operator or laborer performing the repair.
11 All health and safety procedures shall be in accordance with the Site Specific Health and Safety Plan.

C-4 Subsidence Repair Procedure
Subsidence Tracking Form

Subsidence Identification			Subsidence Repair					
Date	Location of Subsidence	Conditions	Date	Area (sf)	Depth (in.)	Fill Material Type	Fill Quantity	Topographic Survey[2 & 3]

Note:

1 Shall be attached to QC Checklist.
2 Upon repair of subsidence area, the annual topographic survey shall document the repaired subsided area; i.e., documenting positive drainage.
3 Initial and date when annual topographic survey is completed.

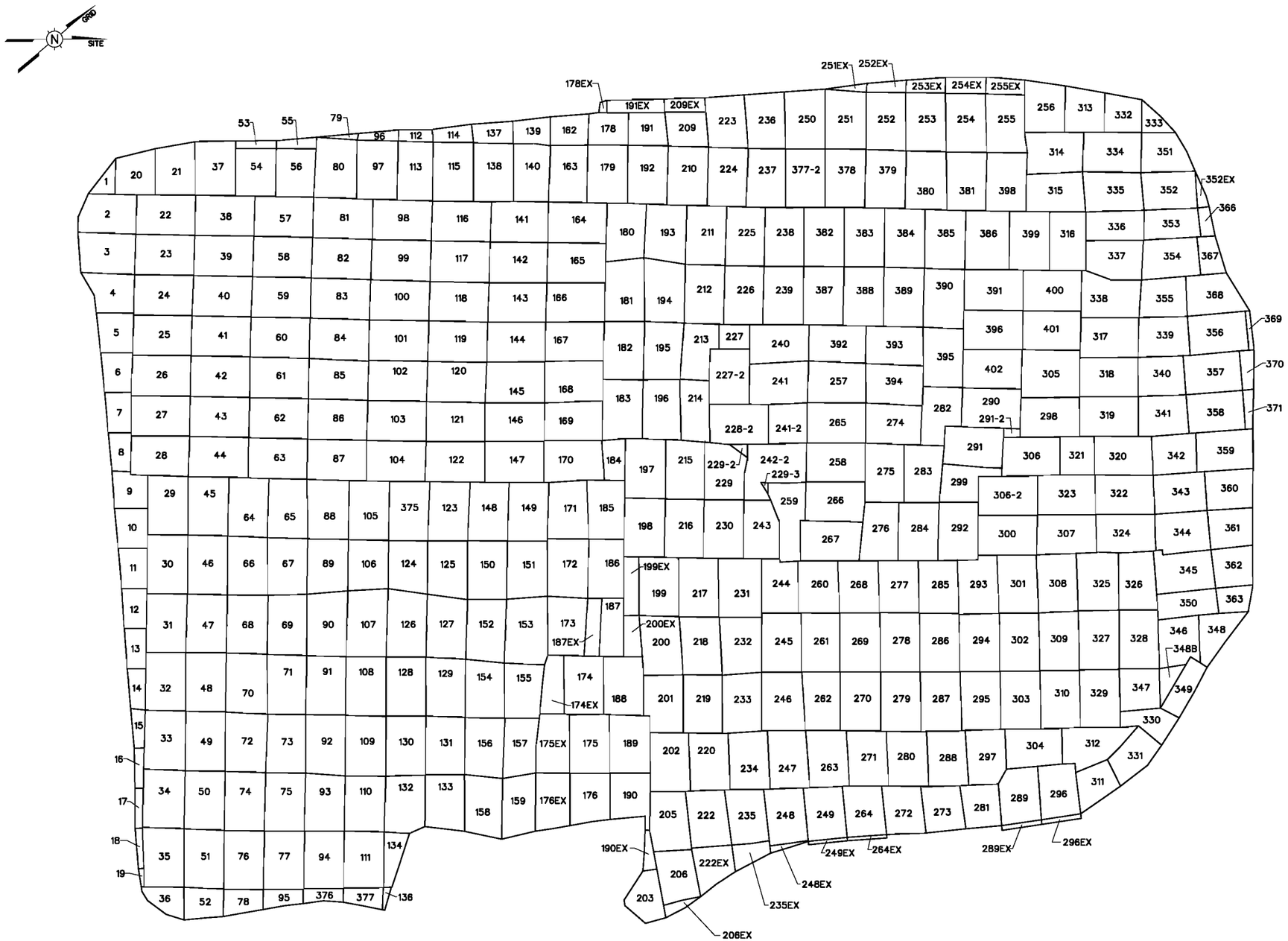
N
GRID
SITE
178EX
191EX
209EX
251EX
252EX
253EX
254EX
255EX
352EX
366
369
370
371
348B
53
55
79
96
112
114
137
139
162
178
191
209
223
236
250
251
252
253
254
255
256
313
332
333
314
334
351
315
335
352
336
353
337
354
367
338
355
368
317
339
356
318
340
357
319
341
358
320
342
359
321
343
360
322
344
361
323
345
362
324
346
363
325
347
326
348
327
349
328
329
330
331
311
312
296
289
281
273
272
264
249
235
222
206
203
190
189
176
175
174
173
172
171
185
186
187
188
155
154
157
156
158
159
134
136
376
377
94
111
93
110
132
133
92
109
130
131
91
108
128
129
90
107
126
127
152
153
89
106
124
125
150
151
88
105
375
123
148
149
64
65
45
29
20
21
37
54
56
80
97
113
115
138
140
163
179
192
210
224
237
377-2
378
379
380
381
398
399
316
385
386
384
383
382
388
389
390
391
400
396
401
395
402
305
298
306
306-2
300
307
299
291
290
291-2
282
283
275
274
258
266
267
259
242-2
229-2
229-3
229
227
227-2
228-2
241-2
240
241
257
265
392
393
394
213
214
212
211
225
226
239
238
237

Appendix D – Spare Parts List

Appendix D
Spare Parts List

These items are at a minimum and Commonwealth may determine that other supplies are required during duration of the Interim Maintenance Period at MFDS.

I. 45-mil Reinforced Polypropylene Liner Repair

Item No.	Item	Comment
1	45-mil reinforced polypropylene liner	1 roll additional material and shall not be exposed to weather. Repair of the IRP Cap liner.
2	8 OZ/SY Nonwoven geotextile	1 roll additional material and shall not be exposed to weather.
3	40-mil non-reinforced geomembrane liner	1 roll additional material and shall not be exposed to weather. Repair geomembrane liner boots.
4	Extra small stainless steel bands	15 geomembrane liner boots on-hand for repair, may be purchased at Mor-Steel
5	Extrusion Welder	2 are currently on-site
6	Leister heat gun	2 are currently on-site
7	Tensiometer liner tester	1 is currently on-site
8	Extension cords	On-hand for repair
9	Measuring Tape	On-hand for repair
10	Vacuum Box	On-hand for repair
11	Liner Knife	On-hand for repair
12	Anchors	On-hand for repair
13	Equipment for moving liner materials	On-hand for repair
14	Cleaning Supplies (cleaners, rags, scraper, etc)	On-hand for repair
15	Paint Marking Stick	On-hand for repair

II. Liner Battens

Item No.	Item	Comment
1	Stainless steel batten bars	2 additional stainless steel batten bars on-hand for repair
2	Rubber gasket material	Additional material on-hand for repair
3	Caulk	Additional material on-hand for repair

II. Cathodic Protection

Item No.	Item	Comment
1	Silicon Diode Bridge	Model MB12A35S60
2	20A Fuse	Model L15S20

III. EDB

Item No.	Item	Comment
1	Rustoleum "Battleship Gray" paint	2 gallons on-hand to maintain the riser pipe
2	Current software for the ISCO Flow Meter	

IV. Survey Tower

Item No.	Item	Comment
1	Thompson's Water Seal (or equivalent)	5 gallons, may purchase at Big 4 Lumber

Acronyms:

Ounce	OZ
Square Feet	SF
Square Yard	SY

Appendix E – Manufacturer Literature and Warranty Information

Appendix E – Manufacturer Literature and Warranty Information

E-1 – IRP Cap Geomembrane Liner Warranty
E-2 – IRP Cap Geomembrane Liner Manufacturer Data
E-3 – Data Logger Manufacturer Data
E-4 – Articulating Concrete Block Mat Manufacturer Data
E-5 – LSF Cathodic Protection System
E-6 – Riser Pipe Manufacturer Data
E-7 – H-Flume Manufacturer Data
E-8 – Ultrasonic Flow Recorder Manufacturer Data
E-9 – Gabion Manufacturer Data
E-10 – Southeast Cap Geomembrane Liner Warranty
E-11 – Fence Manufacturer Data
E-12 – Stream Sampler Manufacturer Data

E-1 – IRP Cap Geomembrane Liner Warranty

Contact Information:

JPS Elastomerics Corporation
Stevens Geomembrane Division
Nine Sullivan Road
Holyoke, MA 01040-2800
413-533-8100
www.stevensgeomembranes.com

STEVENS
GEOMEMBRANES

Rider to JPS Elastomerics Corporation Warranty No. 1335

1. First Paragraph

   a.) First quality means that the reinforced polypropylene and high density polypropylene liners meet the properties in Tables 02270-1 and 02270-2, respectively, as well as all other manufacturing requirements set forth in Section 02270, Geomembrane, of the bid package dated October 6, 2000.

   b.) The warranty period shall be 20-years from the earlier of: (i) the completion of the liner's installation on the Maxey Flats project or (ii) 18 months after the final shipment of liner material.

   c.) The Maxey Flats project is a remediation project intended to contain hazardous and radiological wastes, including tritiated water, in a site covering approximately 60 acres. The liners are intended to prevent to the extent practicable, infiltration of water into trenches which contain the hazardous and radiological wastes. Normal use and service for the liners at the Maxey Flats project includes: sheet flow of precipitation over the liners and design measures to control sheet flow; subsidence under the liner material and the resulting cutting, filling, and reseaming by the warranty holder/maintenance provider; the weather that can occur in eastern Kentucky during the warranty period excluding those catastrophic events described in the first paragraph of the warranty; and reasonable pressures and stresses from inspection and repairs throughout the warranty period. Under no circumstances will JPS Elastomerics be responsible for waste containment.

2. Second Paragraph

   a.) In the first sentence, replace the language following "supply" with the following: "replacement materials needed to repair the defect or deficiency on a pro rata cost basis so to charge the customer only for that portion of the warranted 20-year life which has elapsed. This will be determined by multiplying the then current unit price by the ratio determined by dividing the number of years before the defect occurred by the 20-year warranty period."

   b.) Before the last shipment of the liner, IT Corporation may elect to purchase, for $0.02/square foot, the following enhanced warranty: "For the first two years of the warranty period, JPS Elastomerics shall provide sufficient material to replace any defective material at no cost. Thereafter, JPS Elastomerics shall supply replacement materials at the then current unit price multiplied by the ratio of the years before the defect occurred divided by the 20-year warranty period."

   c.) Notice of warranty claim is extended from "thirty (30) days" in the second paragraph to "ninety (90) days" and starts to run from the time IT Corporation, Shaw Environmental, the Maxey Flats Steering Committee or their assignee receives actual notice of the defect.

3. Installation in accordance with project specifications under the supervision of trained or experienced IT Corporation, Shaw Environmental or the Commonwealth of Kentucky personnel meets the requirements of the first and fourth paragraph of warranty.

A Division of JPS Elastomerics Corp.
Nine Sullivan Road, Holyoke, Massachusetts 01040-2800
Tel: 800/621-2281 • 413/533-8100 Fax: 413/552-1108

4.) Add at the end of the fourth paragraph:

"JPS Elastomerics recognizes that ongoing maintenance and report of the project may include cutting reseaming the material. This will not affect the enforceability of this warranty as to the integrity of material except where the material is cut or seamed."

5.) The warranty is freely transferable or assignable upon timely notice to JPS Elastomerics.

STEVENS GEOMEMBRANES

A Division of JPS Elastomerics Corp.

Thomas J. Vinci

Name: THOMAS J. VINCI

Title: PRESIDENT

CERTIFICATION OF INSTALLATION

bi- Certification must be completed and signed by the Installation Supervisor and Purchaser and returned to astomerics Corp., Nine Sullivan Road, Holyoke, MA 01040-2800 USA.

'arranties will not be issued until Certification of Installation is completed.

AME OF PROJECT Maxey Flats Disposal Site LOCATION Hillsboro, KY

'ARRANTY LENGTH 20 YEARS (prorated) INSTALLATION COMPLETED (see attached)

ATERIAL TYPE (check one)

olypropylene ☐NSF Tan/White ☐Indust. Slate/Black ☐Other PP (color) _____

☒Unreinforced PP ☐Indust Hypalon ☐Other Hypalon _____

UMBER OF SQUARE FEET 3,003,862 SF Thickness 45 mil

YPE OF INSTALLATION ☒EXPOSED ☐BURIED

Liner ☐Cover ☐Cap ☐Baffles ☐Other (Describe) _____

YPE OF APPLICATION:

Potable Water ☐Wastewater ☐Sewage ☒Landfill ☐Leachate Collection

Aquaculture ☐Water Conveyance ☐Methane Collection ☐Mining ☐HazWaste

Industrial (type): _____ ☐Secondary Containment ☐Recreational

O r (describe): _____

AME OF OWNER: Maxey Flats Site IRP, LLC

ONTACT Bennie L. Underwood PHONE 865-691-5052

REET 450 Montbrook Lane CITY Knoxville STATE TN

OUNTRY USA ZIP 37919

wner/Purchaser hereby acknowledges receipt of material and completion of the above installation.

Signed: Bennie L. Underwood, Project Coordinator for the Maxey Flats Site IRP, LLC

Name: Bennie L. Underwood

Company: de maximis, inc.

Title: Project Coordinator

tallation Supervisor hereby acknowledges that all specifications, engineering drawings, and on site ommendations have been complied with.

Signed: Michael R. Kremer Jr.

Name : Mike Kremer

Company: IT Corporation

Title: Construction Superintendent, MFDS

FOR JPS Elastomerics OFFICE USE ONLY

arranty issue number: _____ Date ___/___/___ Approved By _____

Legal

Sep. 14, 2011

Table E-1A
Maxey Flats Disposal Site
Geomembrane Panel Placement Tracking Form

Layout Dwg. Panel Number	Fabricated Panel Number	Date Fabricated	Date Installed	Geomembrane Panel Roll Stock Data						Comments
				Roll Numbers				Lot Number(s)		
82	94	2-14-01	5-12-01	7228	7097	------	------	1637	------	
81	43	2-21-01	5-12-01	7144	7454	------	------	1637	------	
58	33	2-23-01	5-15-01	7406	7430	7112	------	1637	------	
57	84	2-27-01	5-15-01	7294	7451	7440	------	1637	------	
39	186	3-22-01	5-23-01	7568	7575	7555	------	1704	------	
38	132	2-27-01	5-23-01	7103	7091	7092	------	1637	------	
83	28	2-22-01	5-23-01	7106	7115	------	------	1637	------	
59	187	3-22-01	5-23-01	7555	7578	7554	------	1704	------	
98	226	3-6-01	5-23-01	7433[1]	7427[1]	7490[2]	------	1637[1]	1659[2]	
99	8	2-23-01	5-29-01	7460	7451	------	------	1637	------	
100	149	2-27-01	6-11-01	7470	7295	------	------	1637	------	
84	134	2-27-01	6-12-01	7092	7470	7103	------	1637	------	
60	68	2-26-01	6-12-01	7196	7197	7134	7294	1637	------	
40	52	2-26-01	6-12-01	7134	7197	------	------	1637	------	
101	96	2-14-01	6-13-01	7097	7094	7095	------	1637	------	
22	150	3-7-01	6-14-01	7374	7373	------	------	1637	------	
23	210	3-7-01	6-14-01	7376	7409	7374	------	1637	------	
24	224	3-6-01	6-14-01	7494[1]	7427[2]	7435[2]	------	1659[1]	1637[2]	

Table E-1A
Maxey Flats Disposal Site
Geomembrane Panel Placement Tracking Form

Layout Dwg. Panel Number	Fabricated Panel Number	Date Fabricated	Date Installed	Geomembrane Panel Roll Stock Data						Comments
				Roll Numbers				Lot Number(s)		
41	223	3-5-01	6-15-01	7439	7420	7494	------	1637	------	
25	AA	2-27-01	6-15-01	7295	7103	7469	------	1637	------	
116	185	3-22-01	6-20-01	7575	7568	------	------	1704	------	
117	175	3-22-01	6-20-01	7578	7575	------	------	1704	------	
118	32	2-22-01	6-20-01	7463	7461	7406	------	1637	------	
119	31	2-22-01	6-20-01	7125	7461	7463	------	1637	------	
26	214	3-14-01	6-28-01	7423	7342	7323	------	1637	------	
42	197	3-13-01	6-28-01	7425	7438	------	------	1637	------	
61	198	3-13-01	6-28-01	7316	7369	7313	------	1637	------	
85	228	3-6-01	6-29-01	7409	7375	------	------	1637	------	
102	227	3-6-01	6-29-01	7427[1]	7409[1]	7490[2]	7491[2]	1637[1]	1659[2]	
120	70	1-29-01	6-29-01	7320	7305	------	------	1637	------	
86	181	3-12-01	7-3-01	7372[1]	7583[2]	------	------	1637[1]	1704[2]	
62	180	3-9-01	7-3-01	7484	7485	------	------	1659	------	
43	162	3-20-01	7-13-01	7590	7592	7362	7591	1730	------	
27	161	3-20-01	7-13-01	7606	7592	------	------	1730	------	
87	211	3-7-01	7-13-01	7355	7415	7356	------	1637	------	
63	195	3-7-01	7-13-01	7408	7355	------	------	1637	------	

Table E-1A
Maxey Flats Disposal Site
Geomembrane Panel Placement Tracking Form

Layout Dwg. Panel Number	Fabricated Panel Number	Date Fabricated	Date Installed	Geomembrane Panel Roll Stock Data						Comments
				Roll Numbers				Lot Number(s)		
44	230	3-14-01	7-13-01	7349	7438	7351	------	1637	------	
28	229	3-14-01	7-13-01	7353	7321	7323	7349	1637	------	
103	200	3-13-01	7-17-01	7312	7438	7345	------	1637	------	
121	199	3-13-01	7-17-01	7313	7369	7312	------	1637	------	
104	196	3-13-01	7-21-01	7446	7425	------	------	1637	------	
122	184	3-13-01	7-21-01	7417	7446	------	------	1637	------	
105	188	3-22-01	8-1-01	7574	7575	7566	------	1704	------	
88	189	3-22-01	8-1-01	7359[1]	7566[2]	------	------	1637[1]	1704[2]	
65	172	3-21-01	8-1-01	7595	7593	------	------	1730	------	
64	171	3-21-01	8-1-01	7591	7595	------	------	1730	------	
375	2	2-26-01	8-1-01	7451	7124	------	------	1637	------	
123	98	2-14-01	8-1-01	7095	7475	7122	------	1637	------	
45	166	3-8-01	8-2-01	7398	7410	7308	------	1637	------	
29	155	3-8-01	8-2-01	7412	7410	------	------	1637	------	
145	20	2-26-01	8-2-01	7131	7198	------	------	1637	------	
146	36	2-26-01	8-2-01	7198	7134	------	------	1637	------	
147	135	2-2-01	8-2-01	7210	7224	7208	------	1637	------	
148	183	3-12-01	8-3-01	7368	7369	7417	------	1637	------	

Table E-1A
Maxey Flats Disposal Site
Geomembrane Panel Placement Tracking Form

Layout Dwg. Panel Number	Fabricated Panel Number	Date Fabricated	Date Installed	Geomembrane Panel Roll Stock Data						Comments
				Roll Numbers				Lot Number(s)		
149	182	3-12-01	8-3-01	7372	7369	------	------	1637	------	
144	179	3-7-01	8-7-01	7415	7408	------	------	1637	------	
143	165	3-7-01	8-7-01	7373	7418	7415	------	1637	------	
142	106	2-15-01	8-7-01	7166	7167	------	------	1637	------	
141	121	2-13-01	8-8-01	7100	7475	7098	------	1637	------	
113	46	2-21-01	8-15-01	7126	7120	------	------	1637	------	
97	AC	2-28-01	8-15-01	7306	7462	7413	------	1637	------	
80	AB	2-28-01	8-15-01	7469	7462	7295	------	1637	------	
56	48	2-6-01	8-15-01	7111	7193	------	------	1637	------	
54	47	2-6-01	8-15-01	7171	7168	------	------	1637	------	
37	30	2-22-01	8-15-01	7114	7461	7125	------	1637	------	
21	29	2-22-01	8-15-01	7115	7461	------	------	1637	------	
112	66	2-20-01	8-15-01	7136	7144	7430	------	1637	------	
96	66	2-20-01	8-15-01	7136	7144	7430	------	1637	------	
79	110	2-27-01	8-15-01	7442	7451	7103	------	1637	------	
55	110	2-27-01	8-15-01	7442	7451	7103	------	1637	------	
53	110	2-27-01	8-15-01	7442	7451	7103	------	1637	------	
37X	110	2-27-01	8-15-01	7442	7451	7103	------	1637	------	

Table E-1A
Maxey Flats Disposal Site
Geomembrane Panel Placement Tracking Form

Layout Dwg. Panel Number	Fabricated Panel Number	Date Fabricated	Date Installed	Geomembrane Panel Roll Stock Data						Comments
				Roll Numbers				Lot Number(s)		
20	69	2-2-01	8-21-01	7224	7210	------	------	1637	------	
1	110	2-27-01	8-21-01	7442	7451	7103	------	1637	------	
2	127	2-14-01	8-21-01	7231	7228	------	------	1637	------	
3	71	1-29-01	8-21-01	7305	7318	------	------	1637	------	
4	86	2-27-01	8-24-01	7440	7123	7442	------	1637	------	
5	AG	3-1-01	8-30-01	7450	7441	7428	------	1637	------	
6	AF	2-28-01	8-30-01	7449	7470	7441	------	1637	------	
7	49	2-21-01	8-30-01	7128	7127	------	------	1637	------	
30	AE	2-28-01	8-31-01	7419	7470	7449	------	1637	------	
31	AD	2-28-01	9-6-01	7413	7295	7419	------	1637	------	
9	136	2-5-01	9-6-01	7208	7311	------	------	1637	------	
10	45	2-21-01	9-7-01	7453	7254	7132	7126	1637	------	
11	44	2-21-01	9-7-01	7454	7453	------	------	1637	------	
12	AL	3-1-01	9-7-01	7301	7379	------	------	1637	------	
32	AK	3-1-01	9-10-01	7434	7302	7420	7301	1637	------	
46	39	2-7-01	9-10-01	7170	7147	7071	------	1637	------	
66	72	1-29-01	9-10-01	7318	7287	------	------	1637	------	
47	34	2-23-01	9-11-01	7401	7112	7460	------	1637	------	

Table E-1A
Maxey Flats Disposal Site
Geomembrane Panel Placement Tracking Form

Layout Dwg. Panel Number	Fabricated Panel Number	Date Fabricated	Date Installed	Geomembrane Panel Roll Stock Data						Comments
				Roll Numbers				Lot Number(s)		
68	65	2-20-01	9-11-01	7357	7360	7136	------	1637	------	
67	64	2-20-01	9-11-01	7465	7459	7357	------	1637	------	
89	79	2-19-01	9-11-01	7146	7333	------	------	1637	------	
106	78	2-19-01	9-11-01	7110	7146	------	------	1637	------	
124	146	2-12-01	9-11-01	7149	7151	7170	------	1637	------	
69	140	2-5-01	9-12-01	7272	7309	7267	------	1637	------	
90	74	1-30-01	9-12-01	7283	7320	7219	------	1637	------	
48	139	2-5-01	9-12-01	7277	7272	------	------	1637	------	
70	314	4-12-01	9-12-01	7726	7715	------	------	1769	------	
71	329	4-12-01	9-12-01	7691	7726	------	------	1769	------	
91	88	1-30-01	9-12-01	7214	7222	------	------	1637	------	
13	108	2-15-01	9-13-01	7167	7164	------	------	1637	------	
14	93	2-15-01	9-13-01	7164	7160	------	------	1637	------	
107	75	2-16-01	9-13-01	7137	7133	------	------	1637	------	
108	107	2-16-01	9-13-01	7139	7137	------	------	1637	------	
126	89	1-31-01	9-17-01	7222	7289	------	------	1637	------	
128	73	1-30-01	9-17-01	7287	7285	7283	------	1637	------	
49	194	3-7-01	9-17-01	7382	7375	7376	------	1637	------	

Table E-1A
Maxey Flats Disposal Site
Geomembrane Panel Placement Tracking Form

Layout Dwg. Panel Number	Fabricated Panel Number	Date Fabricated	Date Installed	Geomembrane Panel Roll Stock Data						Comments
				Roll Numbers				Lot Number(s)		
72	178	3-6-01	9-17-01	7396	7409	7387	7382	1637	------	
73	92	2-1-01	9-17-01	7204	7293	7205	------	1637	------	
50	AO	3-2-01	9-18-01	7429	7456	7421	------	1637	------	
74	AN	3-2-01	9-18-01	7431	7429	------	------	1637	------	
75	87	1-30-01	9-18-01	7219	7214	------	------	1637	------	
92	120	2-12-01	9-18-01	7217	7221	7215	------	1637	------	
93	118	2-12-01	9-18-01	7151	7221	------	------	1637	------	
109	193	3-5-01	9-18-01	7298	7432	------	------	1637	------	
110	177	3-5-01	9-18-01	7411	7298	------	------	1637	------	
130	112	2-1-01	9-18-01	7200	7218	7206	------	1637	------	
33	40	2-7-01	9-18-01	7138	7111	7113	------	1637	------	
34	55	2-6-01	9-18-01	7168	7111	------	------	1637	------	
35	54	2-6-01	9-18-01	7171	7168	------	------	1637	------	
51	42	2-7-01	9-18-01	7140	7150	------	------	1637	------	
76	138	2-5-01	9-18-01	7309	7277	------	------	1637	------	
125	154	3-8-01	9-26-01	7412[1]	7492[2]	------	------	1637[1]	1659[2]	
127	153	3-8-01	9-26-01	7487	7492	------	------	1659	------	
129	113	2-1-01	9-26-01	7206	7209	------	------	1637	------	

Table E-1A
Maxey Flats Disposal Site
Geomembrane Panel Placement Tracking Form

Layout Dwg. Panel Number	Fabricated Panel Number	Date Fabricated	Date Installed	Geomembrane Panel Roll Stock Data						Comments
				Roll Numbers				Lot Number(s)		
131	AM	3-1-01	9-28-01	7379	7431	------	------	1637	------	
132	56	2-6-01	9-28-01	7111	7193	------	------	1637	------	
15	116	2-2-01	10-1-01	7089	7195	7224	------	1637	------	
16	116	2-2-01	10-1-01	7089	7195	7224	------	1637	------	
17	137	2-5-01	10-1-01	7311	7310	7309	------	1637	------	
18	137	2-5-01	10-1-01	7311	7310	7309	------	1637	------	
19	137	2-5-01	10-1-01	7311	7310	7309	------	1637	------	
36	142	2-9-01	10-1-01	7145	7184	------	------	1637	------	
52	26	2-8-01	10-1-01	7090	7185	------	------	1637	------	
78	38	2-7-01	10-1-01	7172	7170	------	------	1637	------	
77	119	2-13-01	10-2-01	7474	7100	------	------	1637	------	
94	117	2-13-01	10-2-01	7475	7474	------	------	1637	------	
111	105	2-16-01	10-2-01	7118	7121	------	------	1637	------	
134	24	2-8-05	10-2-01	7148	7165	------	------	1637	------	
95	163	3-5-01	10-2-01	7414	7295	7464	------	1637	------	
376	38	2-7-01	10-2-01	7172	7170	------	------	1637	------	
377	148	3-5-01	10-2-01	7436	7451	7414	------	1637	------	
136	163	3-5-01	10-2-01	7414	7295	7464	------	1637	------	

Table E-1A
Maxey Flats Disposal Site
Geomembrane Panel Placement Tracking Form

Layout Dwg. Panel Number	Fabricated Panel Number	Date Fabricated	Date Installed	Geomembrane Panel Roll Stock Data						Comments
				Roll Numbers				Lot Number(s)		
133	124	2-13-01	10-3-01	7203	7148	7199	------	1637	------	
150	122	2-12-01	10-3-01	7215	7217	7203	------	1637	------	
151	81	2-19-01	10-3-01	7457	7146	7334	7378	1637	------	
8	80	2-19-01	10-10-01	7133	7146	7457	------	1637	------	
115	222	3-5-01	11-19-01	7381	7427	------	------	1637	------	
138	209	3-5-01	11-19-01	7432	7381	------	------	1637	------	
140	298	3-19-01	11-19-01	7364	7102	7361	------	1637	------	
165	285	3-19-01	11-19-01	7102[1]	7567[2]	7576[2]	------	1637[1]	1704[2]	
164	53	2-6-01	11-19-01	7267	7180	7309	------	1637	------	
180	22	2-8-01	11-19-01	7162	7152	7159	------	1637	------	
181	41	2-7-01	11-19-01	7113	7170	7140	------	1637	------	
163	23	2-8-01	11-19-01	7159	7152	7148	------	1637	------	
194	BU	8-31-01	12-5-01	7753[1]	7990[2]	------	------	1769[1]	1816[2]	
193	BV	8-31-01	12-5-01	7990	7987	------	------	1816	------	
Fab. Panel Nos. 285, 53, 22, 41, 23, BU, and BV removed from Layout Panel Nos. 165, 164, 180, 181, 163, 194, and 193's positions, resp., to repair liner and subgrade. damage.										
212	170	3-9-01	12-5-01	7424[1]	7484[2]	7486[2]	------	1637[1]	1659[2]	
211	169	3-8-01	12-5-01	7365	7424	------	------	1637	------	
226	97	2-15-01	12-5-01	7175	7317	------	------	1637	------	

Table E-1A
Maxey Flats Disposal Site
Geomembrane Panel Placement Tracking Form

225	95	2-15-01	12-5-01	7160	7220	------	------	1637	------	
238	BF	8-29-01	12-5-01	7963	7952	------	------	1816	------	
239	BE	8-29-01	12-5-01	7764[1]	7963[2]	------	------	1769[1]	1816[2]	
Fab. Panel Nos. 170, 169, 97, 95, BF, and BE removed from Layout Panel Nos. 212, 211, 226, 225, 238, and 239's positions, resp., to repair liner and subgrade damage.										
YD1	80	2-19-01	12-11-01	7133	7146	7457	------	1637	------	
YD2	80	2-19-01	12-11-01	7133	7146	7457	------	1637	------	
YD3	80	2-19-01	12-11-01	7133	7146	7457	------	1637	------	
YD4	80	2-19-01	12-11-01	7133	7146	7457	------	1637	------	
YD5	80	2-19-01	12-11-01	7133	7146	7457	------	1637	------	
163	57	2-6-01	12-12-01	7193	7191	7192	------	1637	------	
179	58	2-6-01	12-12-01	7192	7176	------	------	1637	------	
192	25	2-8-01	12-12-01	7165	7090	------	------	1637	------	
210	316	4-12-01	12-12-01	7727	7722	7723	------	1769	------	
Fabricated Panel Nos. 58, 25, and 316 removed from Layout Panel Nos. 179, 192, and 210's positions, respectively, to repair liner and subgrade damage.										
114	315	4-12-01	12-19-01	7715	7722	------	------	1769	------	
152	21	2-8-01	12-21-01	7150	7162	------	------	1637	------	
137	126	2-13-01	12-21-01	7199	7185	7194	------	1637	------	

Table E-1A
Maxey Flats Disposal Site
Geomembrane Panel Placement Tracking Form

Layout Dwg. Panel Number	Fabricated Panel Number	Date Fabricated	Date Installed	Geomembrane Panel Roll Stock Data						Comments
				Roll Numbers				Lot Number(s)		
154	363	8-21-01	12-27-01	7706	7743	7740	------	1769	------	
156	362	8-21-01	12-27-01	7707	7743	7706	------	1769	------	
158	361	8-21-01	12-27-01	7708	7743	7707	------	1769	------	
153	315	4-12-01	1-16-02	7715	7722	------	------	1769	------	
173	360	8-20-01	1-17-02	7734	7743	------	------	1769	------	
155	359	8-20-01	1-30-02	7739	7770	7734	------	1769	------	
157	358	8-20-01	1-30-02	7742	7739	------	------	1769	------	
YD6	359	8-20-01	1-31-02	7739	7770	7734	------	1769	------	
YD7	359	8-20-01	1-31-02	7739	7770	7734	------	1769	------	
164	27	2-22-01	3-13-02	7105	7106	------	------	1637	------	
165	143	2-9-01	3-13-02	7184	7088	------	------	1637	------	
181	355	8-10-01	3-13-02	7770	7744	------	------	1769	------	
180	50	2-22-01	3-13-02	7108	7128	7105	------	1637	------	
166	282	4-6-01	3-14-02	7667	7646	------	------	1730	------	
167	253	4-6-01	3-14-02	7676	7667	------	------	1730	------	

Table E-1A
Maxey Flats Disposal Site
Geomembrane Panel Placement Tracking Form

Layout Dwg. Panel Number	Fabricated Panel Number	Date Fabricated	Date Installed	Geomembrane Panel Roll Stock Data						Comments
				Roll Numbers				Lot Number(s)		
182	77	2-16-01	3-14-02	7109	7202	7110	------	1637	------	
168	BL	8-30-01	3-15-02	7967	7968	7965	------	1816	------	
195	346	8-8-01	3-15-02	7702	7701	------	------	1769	------	
194	BK	8-30-01	3-15-02	7967	7968	7965	------	1816	------	
193	354	8-9-01	3-15-02	7768	7694	7770	------	1769	------	
196	1-7	1-31-02	4-2-02	9291[1]	8003[2]	------	------	2305[1]	1816[2]	
169	1-12	2-1-02	4-2-02	7958	8000	------	------	1816	------	
183	1-8	1-31-02	4-2-02	8003[1]	7757[2]	------	------	1816[1]	1769[2]	
197	1-11	1-31-02	4-5-02	7957[1]	7958[1]	7754[2]	------	1816[1]	1769[2]	
184	1-36	3-5-02	4-5-02	9611	9609	------	------	2511	------	
170	1-37	3-6-02	4-5-02	9609	9608	------	------	2511	------	
185	239	3-15-01	4-5-02	7335	7339	------	------	1637	------	
198	238	3-15-01	4-5-02	7326	7340	7335	------	1637	------	
171	345	8-8-02	4-5-02	7693	7777	7702	------	1769	------	
211	351	8-9-01	4-5-02	7700	7766	------	------	1769	------	
212	347A	8-9-01	4-5-02	7701	7700	------	------	1769	------	
213	353	8-9-01	4-5-02	7778	7751	7768	------	1769	------	
214	352	8-9-01	4-5-02	7766	7700	7767	7778	1769	------	

Table E-1A
Maxey Flats Disposal Site
Geomembrane Panel Placement Tracking Form

Layout Dwg. Panel Number	Fabricated Panel Number	Date Fabricated	Date Installed	Geomembrane Panel Roll Stock Data						Comments
				Roll Numbers				Lot Number(s)		
215	279	4-10-01	4-5-02	7660	7662	------	------	1730	------	
216	375	4-9-01	4-5-02	7663	7660	------	------	1730	------	
179	212	3-13-01	4-6-02	7345	7438	7342	------	1637	------	
192	300	3-19-01	4-6-02	7363	7331	------	------	1637	------	
210	299	3-19-01	4-6-02	7361	7363	------	------	1637	------	
243	293	3-19-01	4-11-02	7331	7330	------	------	1637	------	
242	BA	8-28-01	4-11-02	7730	7719	------	------	1769	------	
230	294	3-19-01	4-11-02	7327[1]	7572[2]	------	------	1637[1]	1704[2]	
229	BB	8-28-01	4-11-02	7719	7718	------	------	1769	------	
228	90	1-31-01	4-11-02	7289	7296	7293	------	1637	------	
227	262	4-6-01	4-11-02	7659	7657	------	------	1730	------	
226	269	4-6-01	4-11-02	7657	7656	------	------	1730	------	
225	260	4-5-01	4-11-02	7683	7681	------	------	1742	------	
224	261	4-5-01	4-11-02	7681[1]	7682[1]	7659[2]	------	1742[1]	1730[2]	
139	309	4-11-01	4-11-02	7673	7666	------	------	1730	------	
162	325	4-11-01	4-11-02	7725	7724	------	------	1769	------	
178	270	4-6-01	4-12-02	7656	7672	------	------	1730	------	
191	356	8-10-01	4-12-02	7744	7732	------	------	1769	------	

Table E-1A
Maxey Flats Disposal Site
Geomembrane Panel Placement Tracking Form

Layout Dwg. Panel Number	Fabricated Panel Number	Date Fabricated	Date Installed	Geomembrane Panel Roll Stock Data						Comments
				Roll Numbers				Lot Number(s)		
209	252	4-6-01	4-12-02	7672	7675	7616	------	1730	------	
286	344	8-8-01	5-1-02	7783	7694	------	------	1769	------	
294	343	8-7-01	5-1-02	7770	7783	------	------	1769	------	
302	296	3-20-01	5-1-02	7577[1]	7596[2]	------	------	1704[1]	1730[2]	
309	295	3-20-01	5-1-02	7572	7577	------	------	1704	------	
278	339	8-3-01	5-1-02	7752	7782	------	------	1769	------	
269	303	4-9-01	5-1-02	7651	7663	------	------	1730	------	
261	301	4-9-01	5-1-02	7652	7651	------	------	1730	------	
245	287	4-10-01	5-1-02	7650	7637	------	------	1730	------	
327	340	8-3-01	5-1-02	7782	7751	------	------	1769	------	
325	286	4-10-01	5-1-02	7655	7662	7650	------	1730	------	
308	AZ	8-28-01	5-1-02	7690	7709	------	------	1769	------	
301	AY	8-27-01	5-1-02	7972[1]	771[2]	7690[2]	------	1816[1]	1769[2]	
293	316-BX	8-21-01	5-1-02						------	
172	213	3-13-01	5-24-02	7343	7342	7423	------	1637	------	
285	315-BW	8-21-01	5-30-02						------	
277	BD	8-29-01	5-30-02	7745	7769	7764	------	1769	------	
268	BC	8-28-01	5-30-02	7718	7769	------	------	1769	------	

Table E-1A
Maxey Flats Disposal Site
Geomembrane Panel Placement Tracking Form

Layout Dwg. Panel Number	Fabricated Panel Number	Date Fabricated	Date Installed	Geomembrane Panel Roll Stock Data						Comments
				Roll Numbers				Lot Number(s)		
260	276	3-30-01	5-30-02	7101[1]	7104[1]	7624[2]	------	1637[1]	1730[2]	
244	274	3-30-01	5-30-02	7104	7101	------	------	1637	------	
231	268	3-29-01	5-30-02	7130	7452	7104	------	1637	------	
232	267	3-29-01	5-30-02	7437	7452	------	------	1637	------	
217	308	4-11-01	5-31-02	7489[1]	7725[2]	------	------	1659[1]	1769[2]	
218	323	4-11-01	5-31-02	7478[1]	7488[2]	7489[2]	------	1637[1]	1659[2]	
199	306	4-11-01	5-31-02	7673	7666	------	------	1730	------	
200	320	4-10-01	5-31-02	7629	7658	7673	------	1730	------	
199EX	245	4-5-01	5-31-02	7608[1]	7683[2]	------	------	1730[1]	1742[2]	
200EX	245	4-5-01	5-31-02	7608[1]	7683[2]	------	------	1730[1]	1742[2]	
186	244	4-5-01	5-31-02	7609	7608	------	------	1730	------	
187	266	3-29-01	5-31-02	7584[1]	7437[2]	------	------	1704[1]	1637[2]	
187EX	159	3-20-01	5-31-02	7612	7327	7611	------	1730	------	
326	1-2	1-29-02	6-11-02	9275	9284	9276	------	2305	------	
328	1-1	1-29-02	6-11-02	7961[1]	9284[2]	------	------	1816[1]	2305[2]	
329	1-29	3-1-02	6-11-02	9614	9613	------	------	2511	------	
310	1-27	2-20-02	6-11-02	9280	9279	------	------	2305	------	
303	1-48	3-12-02	6-11-02	9666	9660	------	------	2511	------	

Table E-1A
Maxey Flats Disposal Site
Geomembrane Panel Placement Tracking Form

Layout Dwg. Panel Number	Fabricated Panel Number	Date Fabricated	Date Installed	Geomembrane Panel Roll Stock Data						Comments
				Roll Numbers				Lot Number(s)		
295	1-49	3-13-02	6-11-02	9660	9657	------	------	2511	------	
287	1-28	3-1-02	6-11-02	9279[1]	9614[2]	------	------	2305[1]	2511[2]	
347	1-26	2-19-02	6-11-02	9303	9304	9218	9300	2305	------	
279	1-10	1-31-02	6-12-02	7756[1]	7754[1]	7957[2]	------	1769[1]	1816[2]	
270	1-9	1-31-02	6-12-02	7757	7756	------	------	1769	------	
262	284	3-19-01	6-12-02	7573	7567	------	------	1704	------	
246	283	3-19-01	6-12-02	7569	7573	------	------	1704	------	
233	160	3-20-01	6-12-02	7611	7606	------	------	1730	------	
219	159	3-20-01	6-13-02	7612	7327	7611	------	1730	------	
201	144	2-12-01	6-13-02	7182	7153	------	------	1637	------	
174	1-5	1-30-02	6-17-02	9283	9292	------	------	2305	------	
188	1-6	1-30-02	6-17-02	9292	9291	------	------	2305	------	
174EX	158	3-20-01	6-18-02	7589	7596	7612	------	1730	------	
345	297	3-20-01	6-19-02	7596	7598	------	------	1730	------	
159	258	3-29-01	6-20-02	7586	7585	------	------	1704	------	
346	257	3-27-01	6-21-02	7603[1]	7604[1]	7633[1]	7586[2]	1730[1]	1704[2]	
348	1-33	3-4-02	6-24-02	9616	9615	------	------	2511	------	
349	1-32	3-4-02	6-24-02	9615	9606	------	------	2511	------	

Table E-1A
Maxey Flats Disposal Site
Geomembrane Panel Placement Tracking Form

Layout Dwg. Panel Number	Fabricated Panel Number	Date Fabricated	Date Installed	Geomembrane Panel Roll Stock Data						Comments
				Roll Numbers				Lot Number(s)		
349B	1-32	3-4-02	6-25-02	9615	9606	------	------	2511	------	
330	133	3-2-01	6-25-02	7416	7436	------	------	1637	------	
330B	133	3-2-01	6-25-02	7416	7436	------	------	1637	------	
184B	1-36	3-5-02	6-25-02	9611	9609	------	------	2511	------	
312	164	3-6-01	7-2-02	7400	7409	7396	------	1637	------	
331	291	3-6-01	7-2-02	7375	7409	7400	------	1637	------	
331B	291	3-6-01	7-2-02	7375	7409	7400	------	1637	------	
304	101	2-16-01	7-3-02	7304	7121	------	------	1637	------	
311	103	2-16-01	7-3-02	7121	7117	------	------	1637	------	
311B	103	2-16-01	7-3-02	7121	7117	------	------	1637	------	
297	275	3-30-01	7-4-02	7623	7622	7615	------	1730	------	
288	278	3-30-01	7-4-02	7624[1]	7622[1]	7104[2]	------	1730[1]	1637[2]	
280	131	3-2-01	7-4-02	7421	7429	7416	------	1637	------	
271	1-21	2-18-02	7-12-02	9286	9278	------	------	2305	------	
263	1-20	2-18-02	7-12-02	9285	9286	------	------	2305	------	
247	1-13	2-1-02	7-12-02	8000	8001	------	------	1816	------	
234	1-23	2-18-02	7-12-02	9301	9305	------	------	2305	------	
220	1-22	2-18-02	7-12-02	9278	9300	------	------	2305	------	

Table E-1A
Maxey Flats Disposal Site
Geomembrane Panel Placement Tracking Form

Layout Dwg. Panel Number	Fabricated Panel Number	Date Fabricated	Date Installed	Geomembrane Panel Roll Stock Data						Comments
				Roll Numbers				Lot Number(s)		
239	AR	8-24-01	8-5-02	7765[1]	7763[1]	7970[2]	------	1769[1]	1816[2]	
238	51	8-24-01	8-5-02	7773	7765	------	------	1769	------	
387	83	8-22-01	8-5-02	7760	7759	7734	7731	1769	------	
382	AV	8-22-01	8-5-02	7697	7723	7696	------	1769	------	
388	192	4-4-01	8-5-02	7216	7181	------	------	1637	------	
383	190	4-4-01	8-5-02	7216[1]	7614[2]	------	------	1637[1]	1730[2]	
389	233	3-26-01	8-5-02	7096	7315	7631	------	1637	------	
384	232	3-26-01	8-5-02	7093	7315	7096	------	1637	------	
390	334	4-13-01	8-5-02	7713	7711	------	------	1769	------	
385	333	4-13-01	8-5-02	7716	7713	------	------	1769	------	
393	318	4-13-01	8-5-02	7717	7697	------	------	1769	------	
392	317	4-12-01	8-5-02	7723	7717	------	------	1769	------	
237	67	8-23-01	8-6-02	7728	7729	------	------	1769	------	
377-2	85	8-22-01	8-6-02	7731	7770	7728	------	1769	------	
378	35	8-24-01	8-6-02	7908	7773	------	------	1769	------	
379	109	8-23-01	8-6-02	7750	7760	7908	------	1769	------	
380	125	2-14-01	8-6-02	7231	7183	------	------	1637	------	
381	123	2-14-01	8-6-02	7099	7098	7231	------	1637	------	

Table E-1A
Maxey Flats Disposal Site
Geomembrane Panel Placement Tracking Form

Layout Dwg. Panel Number	Fabricated Panel Number	Date Fabricated	Date Installed	Geomembrane Panel Roll Stock Data						Comments
				Roll Numbers				Lot Number(s)		
386	176	4-4-01	8-6-02	7610	7613	7614	------	1730	------	
398	157	4-4-01	8-6-02	7607	7610	------	------	1730	------	
399	347	4-13-01	8-6-02	7696	7695	7716	------	1769	------	
223	319	4-13-01	8-8-02	7697	7723	7696	------	1769	------	
236	104	2-15-01	8-8-02	7116	7119	7169	------	1637	------	
250	63	2-20-01	8-8-02	7458	7430	7465	------	1637	------	
251	62	2-20-01	8-8-02	7430	7458	------	------	1637	------	
252	145	2-12-01	8-8-02	7153	7088	7149	------	1637	------	
253	60	2-19-01	8-8-02	7467	7121	7466	------	1637	------	
254	59	2-19-01	8-8-02	7468	7467	------	------	1637	------	
255	82	2-19-01	8-10-02	7378	7217	7468	------	1637	------	
256	321	4-11-01	8-10-02	7666	7665	------	------	1730	------	
314	307	4-11-01	8-10-02	7478[1]	7665[2]	------	------	1637[1]	1730[2]	
315	236	4-5-01	8-10-02	7181	7201	------	------	1637	------	
316	243	4-5-01	8-10-02	7201[1]	7653[2]	7609[2]	------	1637[1]	1730[2]	
255EX	158	3-20-01	8-14-02	7589	7596	7612	------	1730	------	
251EX	114	2-2-01	8-16-02	7209	7262	------	------	1637	------	
252EX	114	2-2-01	8-16-02	7209	7262	------	------	1637	------	

Table E-1A
Maxey Flats Disposal Site
Geomembrane Panel Placement Tracking Form

Layout Dwg. Panel Number	Fabricated Panel Number	Date Fabricated	Date Installed	Geomembrane Panel Roll Stock Data						Comments
				Roll Numbers				Lot Number(s)		
253EX	111	2-1-01	8-16-02	7205	7200	------	------	1637	------	
254EX	111	2-1-01	8-16-02	7205	7200	------	------	1637	------	
202	126	2-13-01	9-6-02	7199	7185	7194	------	1637	------	
189	AI	3-1-01	9-6-02	7426	7420	------	------	1637	------	
175	AH	3-1-01	9-6-02	7428	7426	------	------	1637	------	
175EX	99	2-15-01	9-6-02	7317	7304	------	------	1637	------	
176EX	1-19	2-15-02	9-6-02	9287	9285	------	------	2305	------	
176	1-18	2-15-02	9-6-02	9294	9296	9287	------	2305	------	
190	115	2-2-01	9-6-02	7262	7218	7089	------	1637	------	
240	AW	8-27-01	9-10-02	7690	7709	------	------	1769	------	
241	BR	8-31-01	9-10-02	7941	7946	------	------	1816	------	
227-2	AX	8-27-01	9-10-02	7709	7763	7705	------	1769	------	
228-2	327	4-11-01	9-10-02	7721	7698	------	------	1769	------	
241-2	310	4-12-01	9-10-02	7688	7698	7691	------	1769	------	
257	61	2-20-01	9-10-02	7466	7459	7430	------	1637	------	
265	BQ	8-31-01	9-10-02	7949	7943	7947	------	1816	------	
394	BP	8-31-02	9-19-02	7941	7943	7949	------	1816	------	
274	BO	8-30-01	9-19-02	7944	7941	------	------	1816	------	

Table E-1A
Maxey Flats Disposal Site
Geomembrane Panel Placement Tracking Form

Layout Dwg. Panel Number	Fabricated Panel Number	Date Fabricated	Date Installed	Geomembrane Panel Roll Stock Data						Comments
				Roll Numbers				Lot Number(s)		
395	BJ	8-30-01	9-19-02	7968	7769	7967	------	1816	------	
282	BI	8-29-01	9-19-02	7956	7964	7968	------	1816	------	
242-2	BN	8-30-01	9-24-02	7955	7944	------	------	1816	------	
229-2	BN	8-30-01	9-24-02	7955	7944	------	------	1816	------	
229-3	BN	8-30-01	9-24-02	7955	7944	------	------	1816	------	
258	BM	8-30-01	9-24-02	7954	7955	------	------	1816	------	
266	292	3-20-01	9-24-02	7572	7577	------	------	1704	------	
275	290	4-9-01	9-24-02	7646	7664	------	------	1730	------	
283	BZ	8-22-01	9-24-02	7758	7774	------	------	1769	------	
391	247	3-15-01	9-25-02	7325	7335	7324	------	1637	------	
396	BY	8-21-01	9-25-02	7747	7758	------	------	1769	------	
402	37	2-7-01	9-25-02	7176	7172	------	------	1637	------	
290	BS	8-31-01	9-25-02	7946	7985	------	------	1816	------	
291	AJ	3-1-01	9-25-02	7420	7302	------	------	1637	------	
400	246	3-15-01	9-25-02	7339	7325	------	------	1637	------	
401	BT	8-31-01	9-25-02	7984[1]	7985[2]	7947[2]	------	1769[1]	1816[2]	
334	338	8-2-01	9-25-02	7771	7752	------	------	1769	------	
335	337	8-2-01	9-25-02	7780	7771	------	------	1769	------	

Table E-1A
Maxey Flats Disposal Site
Geomembrane Panel Placement Tracking Form

Layout Dwg. Panel Number	Fabricated Panel Number	Date Fabricated	Date Installed	Geomembrane Panel Roll Stock Data						Comments
				Roll Numbers				Lot Number(s)		
351	BH	8-29-01	9-25-02	7960	7956	------	------	1816	------	
352	BG	8-29-01	9-25-02	7952	7964	------	------	1816	------	
313	241	3-27-01	9-25-02	7618	7626	------	------	1730	------	
332	240	3-26-01	9-25-02	7627	7618	------	------	1730	------	
352EX	240	3-26-01	9-25-02	7627	7618	------	------	1730		
333	19	2-26-01	9-25-02	7135	7123	7131	------	1637	------	
336	3	2-26-01	9-25-02	7124	7451	7123	------	1637	------	
259	336	8-1-01	10-3-02	7781	7776	7780	------	1769	------	
267	335	8-1-01	10-3-02	7710	7781	------	------	1769	------	
276	216	3-14-01	10-9-02	7322	7321	------	------	1637	------	
284	215	3-14-01	10-9-02	7323	7342	7322	------	1637	------	
292	AQ	7-31-01	10-9-02	7714	7710	------	------	1769	------	
299	174	3-21-01	10-23-02	7582[1]	7578[1]	7594[2]	------	1704[1]	1730[2]	
306	341	8-7-01	10-23-02	7775	7720	------	------	1769	------	
306-2	173	3-21-01	10-23-02	7593	7594	------	------	1730	------	
300	218	3-23-01	10-23-02	7315[1]	7564[2]	------	------	1637[1]	1704[2]	
307	217	3-23-01	10-23-02	7553	7569	7564	------	1704	------	
323	142	2-9-01	10-23-02	7145	7184	------	------	1637	------	

Table E-1A
Maxey Flats Disposal Site
Geomembrane Panel Placement Tracking Form

Layout Dwg. Panel Number	Fabricated Panel Number	Date Fabricated	Date Installed	Geomembrane Panel Roll Stock Data						Comments
				Roll Numbers				Lot Number(s)		
321	234	3-26-01	10-23-02	7631[1]	7620[2]	7617[2]	------	1637[2]	1730[2]	
291-2	174	3-21-01	10-23-02	7582[1]	7578[1]	7594[2]	------	1704[1]	1730[2]	
298	235	3-26-01	10-23-02	7617	7627	------	------	1730	------	
305	102	2-15-01	10-23-02	7119	7116	------	------	1637	------	
402-2	234	3-26-01	10-23-02	7631[1]	7620[2]	7617[2]	------	1637[2]	1730[2]	
324	100	2-14-01	10-24-02	7122	7119	------	------	1637	------	
322	156	4-4-01	10-24-02	7616	7607	------	------	1730	------	
320	277	4-3-01	10-24-02	7615	7616	------	------	1730	------	
319	204	3-23-01	10-24-02	7552	7578	7553	------	1704	------	
318	203	3-23-01	10-24-02	7565	7571	7552	------	1704	------	
317	251	3-27-01	10-24-02	7605	7603	------	------	1730	------	
338	250	3-27-01	10-24-02	7621	7605	------	------	1730	------	
337	202	3-23-01	10-24-02	7288[1]	7571[2]	------	------	1637[1]	1704[2]	
353	220	3-26-01	11-14-02	7315[1]	7093[1]	7562[2]	------	1637[1]	1704[2]	
354	130	8-23-01	11-15-02	7755	7748	7750	------	1769	------	
367	129	8-23-01	11-15-02	7729	7755	------	------	1769	------	
366	129	8-23-01	11-15-02	7729	7755	------	------	1769	------	
355	219	3-23-01	11-20-02	7315[1]	7561[2]	7562[2]		1637[1]	1704[2]	

Table E-1A
Maxey Flats Disposal Site
Geomembrane Panel Placement Tracking Form

Layout Dwg. Panel Number	Fabricated Panel Number	Date Fabricated	Date Installed	Geomembrane Panel Roll Stock Data						Comments
				Roll Numbers				Lot Number(s)		
368	248	3-15-01	11-20-02	7297	7362	------	------	1637	------	
339	263	3-15-01	11-21-02	7324	7335	7367	7297	1637	------	
356	39	2-7-01	11-21-02	7170	7147	7071	------	1637	------	
369	38	2-7-01	11-21-02	7172	7170	------	------	1637	------	
340	237	3-15-01	11-24-02	7455	7410	7326	------	1637	------	
357	231	3-14-01	11-24-02	7351	7455	------	------	1637	------	
370	38	2-7-01	11-24-02	7172	7170	------	------	1637	------	
341	1-4	1-30-02	11-24-02	9282	9283	------	------	2305	------	
358	1-3	1-30-02	11-24-02	9276	9282	------	------	2305	------	
371	AU	8-27-01	11-24-02	7712[1]	7690[1]	7972[2]	------	1769[1]	1816[2]	
342	152	3-8-01	11-25-02	7493	7487	------	------	1659	------	
359	1-15	2-14-02	11-25-02	9297	9295	------	------	2305	------	
343	151	3-7-01	11-25-02	7356	7415	7348	7427	1637	------	
360	1-14	2-14-02	11-25-02	8001[1]	9298[2]	9297[2]	------	1816[1]	2305[2]	
344	1-47	3-12-02	11-26-02	9679[1]	9678[2]	9666[2]	------	2305[1]	2511[2]	
361	1-35	3-5-02	11-26-02	9604	9605	9611	------	2511	------	
345	1-34	3-5-02	11-26-02	9606	9605	------	------	2511	------	

Fabrication Panel No. (FP) 1-34 replaces FP 297. FP 297 was placed with the seams running across the slope instead of down the slope. It will be used later as needed.

Table E-1A
Maxey Flats Disposal Site
Geomembrane Panel Placement Tracking Form

Layout Dwg. Panel Number	Fabricated Panel Number	Date Fabricated	Date Installed	Geomembrane Panel Roll Stock Data						Comments
				Roll Numbers				Lot Number(s)		
362	1-46	3-12-02	11-26-02	9679[1]	9682[2]	------	------	2305[1]	2511[2]	
350	1-41	3-7-02	12-3-02	9672	9669	------	------	2511	------	
363	1-40	3-7-02	12-3-02	9601	9672	------	------	2511	------	
296	1-25	2-19-02	12-17-02	9304	9303	------	------	2305	------	
296EX1	103	2-16-01	12-17-02	7121	7117	------	------	1637		
289	1-24	2-19-02	12-21-02	9305	9304	------	------	2305	------	
281	1-45	3-11-02	1-8-03	9649	9682	------	------	2511	------	
273	1-44	3-11-02	1-8-03	9644	9649	------	------	2511	------	
272	255	3-16-01	1-8-03	7362[1]	7551[2]	7581[2]	------	1637[1]	1704[2]	
264	254	3-15-01	1-8-03	7362[1]	7551[2]	------	------	1637[1]	1704[2]	
249	1-43	3-8-02	1-9-03	9650	9670	9669	9644	2511	------	
248	1-42	3-8-02	1-9-03	9669	9670	------	------	2511	------	
248EX	AU	8-27-01	1-9-03	7690[1]	7712[1]	7972[2]	------	1769[1]	1816[2]	
235	AS	8-27-01	1-9-03	7970	7972	------	------	1816	------	
235EX	AU	8-27-01	1-9-03	7690[1]	7712[1]	7972[2]	------	1769[1]	1816[2]	
222	1-31	3-4-02	1-9-03	9618	9612	9616	------	2511	------	
222EX	1-30	3-1-02	1-9-03	9613	9612	------	------	2511	------	
205	305	4-10-01	1-10-03	7661	7629	------	------	1730	------	

Table E-1A
Maxey Flats Disposal Site
Geomembrane Panel Placement Tracking Form

Layout Dwg. Panel Number	Fabricated Panel Number	Date Fabricated	Date Installed	Geomembrane Panel Roll Stock Data						Comments
				Roll Numbers				Lot Number(s)		
206	302	4-10-01	1-10-03	7637	7661	------	------	1730	------	
206EX	249	3-27-01	1-10-03	7625	7621	------	------	1730	------	
203	168	3-8-01	1-10-03	7366	7461	7365	------	1637	------	
296EX2	N/A	N/A	1-11-03	12475	------	------	------	3136	------	Roll Stock
289EX	N/A	N/A	1-11-03	12475	------	------	------	3136	------	Roll Stock
249EX	1-40	3-7-02	1-11-03	9601	9672	------	------	2511	------	
264EX	1-40	3-7-02	1-11-03	9601	9672	------	------	2511	------	
190EX	1-16	2-14-02	1-12-03	9295	9297	9299	------	2305	------	
203EX	1-16	2-14-02	1-12-03	9295	9297	9299	------	2305	------	

Table E-1B
Maxey Flats Disposal Site
Geomembrane Panel Placement
List of Added Panels

Anchor Trench Panel Additions	Interior Panel Additions
37X	174EX
190EX	175EX
203EX	176EX
206EX	184B
222EX	187EX
235EX	199EX
248EX	200EX
249EX	227-2
251EX	228-2
252EX	229-2
253EX	229-3
254EX	242-2
255EX	291-2
264EX	306-2
289EX	377-2
296EX1	402-2
296EX2	
311B	
330B	
331B	
348B	
349B	
352EX	

E-2 – IRP Cap Geomembrane Liner Manufacturer Data

Contact Information:

JPS Elastomerics Corporation
Stevens Geomembrane Division
Nine Sullivan Road
Holyoke, MA 01040-2800
413-533-8100
www.stevensgeomembranes.com

POLYPROPYLENE

POLYPROPYLENE GEOMEMBRANES FOR CRITICAL CONTAINMENT APPLICATIONS

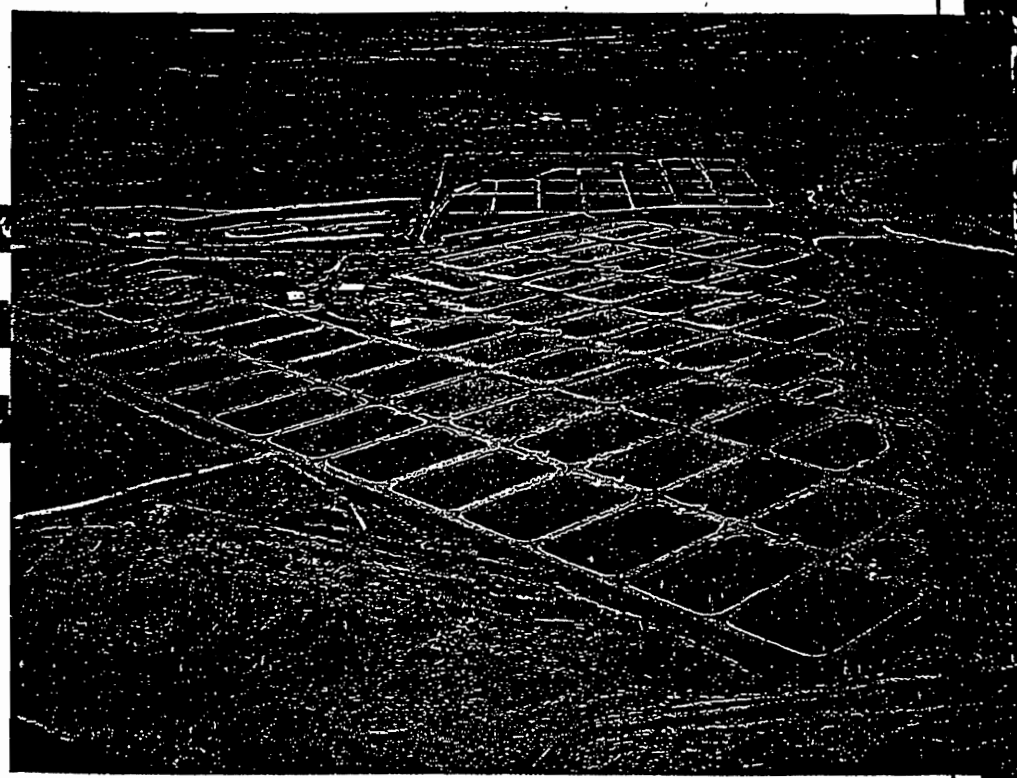

Thermally weldable

Time proven toughness

Industrial & potable water formulations

STEVENS
GEOMEMBRANES

Stevens Polypropylene Geomembranes from JPS... an extremely tough sheet and containment security from thermally welded seams.

Experience and Capabilities

For over two decades, Stevens Geomembranes Division of JPS Elastomerics Corp. has specialized in the development and manufacture of high performance, scrim-reinforced geomembranes for critical containment applications. With hundreds of millions of square feet installed worldwide, Stevens floating covers, liners, and caps are helping to safeguard valuable natural resources the world over.

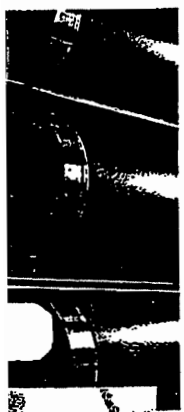

vens Geomem-ane being oduced in JPS' 2 million calen-ring operation Westfield, rth Carolina.

A former division of J.P. Stevens & Co., Inc., with over 130 years of compounding and calendering experience, JPS Elastomerics today is dedicated to manufacturing high-performance elastomeric products for use in the construction, computer and general industrial markets.

JPS Elastomerics has manufacturing plants in Easthampton, MA and Westfield, NC. The Company's administrative headquarters, including the Stevens Geomembranes Division's sales and marketing operation, are located in Holyoke, MA.

Advanced Manufacturing Techniques

Stevens Polypropylene Geomembranes are manufactured in bulk rolls at our $12 million calendering operation in Westfield, North Carolina. This modern facility combines the sheet-forming process with the encapsulation of a high-strength polyester scrim reinforcement in a continuous single-pass operation.

This computer-controlled mixing and calendering operation provides continuous quality control of the compound and scrim before manufacturing, nuclear scanning of the sheet during manufacture, and statistical QA/QC procedures. Post manufacture destructive and non-destructive testing is performed on the final product to assure conformance to rigid specifications.

Hot-air welding technology allows easy field seaming and post-installation repair of Stevens Polypropylene Geomembranes

Why Polypropylene?

Stevens Geomembranes are based on cataloy process polypropylene, a highly flexible form of the same base material found in today's car bumpers and side moldings. Specified for its outstanding toughness, the polymer is manufactured so it can be calendered in flexible sheets. Its toughness makes it an ideal base polymer for use in rugged geomembrane applications.

In addition to its toughness, polypropylene has many other

Containment pond lined with Stevens Polypropylene Geomembrane at Grubstake Mine in New Mexico.

Cover photo: The 59 acre (24 hectares) Dundee Fish Hatchery in Wichita Falls, Texas, one of the world's largest, lined 73 of its warm-water ponds with over 3 million square feet (279,000 m²) of Stevens

Heat welding technology is used to make, strong, reliable field seams.

important characteristics that make it ideally suitable for critical containment applications:

- UV resistance for outstanding weatherability in exposed applications. Stevens Geomembranes are backed by a long term weathering warranty.
- No plasticizers to leach out and cause embrittlement or cracking.
- Low coefficient of thermal expansion and contraction provides excellent dimensional stability and lay-flat characteristics.
- Not susceptible to environmental stress crack (ASTM D1693).
- Highly flexible for easy conformance to earth contours.
- Scrim reinforcement provides enhanced tear and puncture resistance.
- Excellent chemical resistance to most industrial effluents.
- Available in both potable water and industrial grades in 36-mil (0.9mm), 45-mil (1.14mm), and 60-mil (1.52mm) thicknesses.
- Potable water grade membrane is ANSI/NSF-61 listed.

Large-panel factory fabrication creates blankets up to 25,000 square feet (2,300 m²) that are shipped to job sites and field seamed using reliable wedge or hot-air welding technology.

Polypropylene Geomembranes have low maintenance requirements. The membrane remains heat-weldable throughout its installation life. Any mechanical damage can usually be repaired by hand by an in-house maintenance crew, eliminating the need for costly transport of equipment and repair technicians to remote locations.

Stevens Polypropylene Geomembranes meet all governmental requirements for contact with drinking water, including ANSI/NSF-61, in addition to international standards such as WRC (British Water Regulation Commission), and DWI (British Drinking Water Inspectorate). Polypropylene has also been tested in accordance with all applicable ASTM, FTM, ANSI/NSF and GRI test

The Dexter Fish Hatchery in Roswell, New Mexico uses both Stevens Hypalon and Polypropylene Geomembranes.

Quality Installatio

A geomembra containment is only as goo its installatio Therefore, Ste Geomembran works with a group of high qualified fabr tors and inst around the g who have bil of square fee successful geo brane installa experience in containment cations.

Outstanding weathering and UV resistance provides long term, durable containment in a wastewater retention basin at the prison in Somerset, Pennsylvania.

Physical Properties – Polypropylene Geomembranes

Property	Test Method	Specification			
		CERTIFIED VALUE	TYPICAL VALUE	CERTIFIED VALUE	TYPICAL VALUE
Gauge, nominal mils (mm)	—	45 (1.14)	45 (1.14)	36 (0.90)	36 (0.90)
Plies/reinforcing	—	1	1	1	1
Thickness, minimum 1. Overall mils(mm) 2. Over scrim mils(mm)	ASTM D-751 Optical Method	41 (1.04) 11 (0.28)	44 (1.12) 12 (0.30)	34 (0.86) 11 (0.28)	36 (0.90) 11 (0.28)
Breaking strength-fabric minimum lbf(kN)	ASTM D-751 Method A	225 (1.0)	300 (1.34)	225 (1.0)	275 (1.22)
Low temperature flexibility °F(°C)	ASTM D-2136 1/8" mandrel, 4 hour pass	-40 (-40)	-65 (-54)	-40 (-40)	-65 (-54)
Puncture resistance, minimum lbs (kN)	FTMS 101C Method 2031	350 (1.56)	400 (1.78)	300 (1.34)	350 (1.56)
Tear strength, minimum lbf (kN)	ASTM D-5884	55 (0.24)	100 (0.45)	55 (0.24)	100 (0.45)
Dimensional stability (% change max.)	ASTM D-1204 180°F /82°C 1 hour	±1.0	±0.5 (0.5)	±1.0 (1.0)	±0.5 (0.5)
Hydrostatic resistance, min. psi (MPa)	ASTM D-751 Method A, Procedure 1	350 (2.4)	400 (2.75)	325 (2.2)	375 (2.58)
Ply adhesion, minimum lbs./in. (kN/m)	ASTM D-413 Machine Method, Modified	20 (3.5)	30 (5.25)	20 (3.5)	30 (5.25)
Water absorption maximum, % wt. change	ASTM D-471 30 days @ 70°F (21°C)	<1%	<1%	<1%	<1%
ESCR (Env Stress Crack Resistance) minimum hrs with no failure	ASTM D-1693 3000 hrs.	Not affected by ESC	Not affected by ESC	Not affected by ESC	Not affected by ESC
UV resistance	ASTM G26 Xenon arc 80°C/4000 hrs.	Pass	Pass	Pass	Pass
TYPICAL FABRICATED SEAM PROPERTIES**					
Bonded seam strength, minimum	ASTM D-751, modified	200 (0.89)	200 (0.89)	175 (0.78)	175 (0.78)
Peel adhesion minimum	ASTM D-413, modified	20 (3.5) or FTB	20 (3.5) or FTB	20 (3.5) or FTB	20 (3.5) or FTB

***As made by others*

For More Information

If you'd like more information on Stevens Polypropylene Geomembranes, or any other Stevens Geomembrane products or systems, contact JPS at 1-800-621-2281.

All statements herein are expressions of opinion, which by performance and testing are believed to be accurate and reliable, but are presented without guarantee or responsibility on our part. Statements concerning possible use of our products are made without any knowledge that such recommended uses may infringe any patent. No warranty, expressed or implied, other than that described in this brochure, is made or intended.

STEVENS GEOMEMBRANES

A Division JPS Elastomerics Corp.
Nine Sullivan Road
Holyoke, MA 01040-2800
Telephone: 800-621-2281 Int'l: 413-552-1000
Fax: 413-552-1198
Internet: www.stevensgeomembranes.com

PPRP11 7/98 © Copyright 1998 JPS Elastomerics Corp.

CHEMICAL RESISTANCE

An "Engineered" Approach

A common practice in the containment industry today is to select a geomembrane based on the highest degree of chemical resistance, frequently exclusive of other physical properties or application-based selection criteria. A more engineered approach is to balance the chemical resistance against other key factors that must be satisfied in order to meet all the requirements of the specific project. These may be such factors as sub-grade conformance and puncture resistance, ease of installation, thermal seamability, environmental stress crack resistance, dimensional stability during extreme temperature changes, UV resistance, etc.

Polypropylene...the Best of Both Worlds

Polypropylene Geomembranes combine the best of both worlds. They have exceptional physical properties as well as excellent chemical resistance. This makes Polypropylene ideally suited for a wide range of buried and exposed containment applications without sacrificing key performance characteristics.

Because it is part of the polyolefin family (as is HDPE), Polypropylene is resistant to a broad range of chemicals and solutions, making geomembranes made from Polypropylene suitable for containing a wide range of industrial effluents, municipal wastewater, and waste leachates.

STEVENS Polypropylene

Organic Solvent Testing

In an independent laboratory test, the chemical resistance of a 1.0mm (40 mil) Polypropylene Geomembrane was tested against saturated solutions of a variety of organic solvents. Upon reaching equilibrium, (i.e. no further organic absorption in the polymer), the sheet samples were tested for physical properties changes. The results are shown in Table 1. The data indicates no significant detrimental effect on the Polypropylene sheet samples after exposure to a variety of organics.

EPA 9090 Geomembrane Immersion Test

In the EPA 9090, geomembrane immersion test, no discernable loss of physical properties was noted when Polypropylene was exposed to a municipal leachate obtained from the Delaware Solid Waste Landfill in Sandtown, Delaware. The test was conducted at two temperatures, 23°C (73°F) and 50°C (122°F). In his test, various critical properties were monitored over four months of sheet sample immersion in the leachate with little or no change in physical/mechanical properties.

Project-Specific Chemical Testing Important

Obviously, the degree of chemical attack on any material will be influenced by a number of factors and their interaction. Project-specific chemicals or mixture of chemicals, in the concentrations and temperatures found in the actual application, must be tested against the geomembrane system that will contain them.

Table 1. Resistance of Polypropylene to Saturated Aqueous-Organic Solutions

Solution	Concentrate (ppm)	Weight Gain (%)	Tensile Yield (MPa)	Tensile Break (MPa)	Ultimate Elongation
Control			8.00	23.50	840
Water		0.10	8.70	22.30	800
2% NaCL	2000	0.10	7.80	22.00	815
MEK	1000	0.18	8.70	21.40	775
TCE	475	2.00	8.00	25.00	835
O-Xylene	150	1.10	7.80	22.60	840
Toluene	475	2.25	7.20	20.00	775
+2% NaCL	475	2.50	7.60	20.00	765

Notes: 1. 120 Day immersion data, Matrecon, Inc.
2. 1 MPa = 145 psi.

Approved Chemical Resistance List

Stevens Polypropylene Geomembranes exhibit resistance to a wide range of aggressive chemicals. This performance property can be of critical importance in various containment environments. The following is a list of chemicals approved for use in contact with JPS Polypropylene Geomembranes. Restrictions are that the chemical temperature as it is applied to the geomembrane is not to exceed 125°F. If the chemical temperature is higher, or if the chemical is not listed, contact JPS Elastomerics Corp.

It is important to note the degree of attack on any material is influenced by a number of variable factors including dilution of the chemical, temperature, aeration, velocity of flow, duration of exposure, stability of the fluid, possible chemical reaction with other compounds being held in the same pond, size of the area under attack, geometry of the test sample, etc. Therefore, this list is offered as a guide only.

Before specifying Stevens Polypropylene Geomembranes for a liner or floating cover application, we advise that you test the material under actual or simulated service conditions.

A

ACETAMIDE
ACETIC ACID
ACETONE
ACID MINE WATER
ALCOHOL AMYL
ALCOHOL ETHYL (ETHANOL)
ALUMINUM CHLORIDE 10%
ALUMINUM FLUORIDE
ALUMINUM NITRATE
ALUMINUM SULFATE 10%
ALUMINUM CHLOROHYDROXIDE WET
AMMONIA 100% ANHYDROUS
AMMONIA AQUEOUS
AMMONIA CARBONATE
AMMONIUM BIFLORIDE
AMMONIUM CHLORIDE SATURATED
AMMONIUM HYDROXIDE
AMMONIUM NITRATE
AMMONIUM SULFATE 10%
AMMONIUM SULFITE
ANTIMONY TRICHLORIDE
ARSENIC ACID
ASPHALT

B

BARIUM CARBONATE
BARIUM CHLORIDE SATURATED
BARIUM CHLORIDE 30%
BARIUM HYDROXIDE

BARIUM SULFIDE
BEER
BEET SUGAR LIQUOR
BLACK LIQUOR
BRINE
BUTYRIC ACID 5%

C

CALCIUM CARBONATE
CALCIUM CHLORIDE
CALCIUM CHLORIDE SATURATED
CALCIUM HYDROXIDE 20%
CALCIUM HYPOCHLORITE 100%
CALCIUM NITRATE
CALCIUM SULFATE
CALCIUM SULFITE
CALCIUM DIOXIDE
CALCIUM MONOXIDE
CALCIUM PHOSPHATE
CARBONIC ACID
CASTOR OIL
CHLOROACETIC ACID
CITRIC ACID CONCENTRATED
CITRIC ACID DILUTE
COPPER CHLORIDE
COPPER CYANIDE
COPPER FLOURIDE
COPPER NITRATE
COPPER SULFATE
COTTONSEED OIL
CUPRIC CHLORIDE <2%
CYANIC ACID

D

DETERGENTS 20%
DIETHYLENE GLYCOL

E

ETHYL ALCOHOL
ETHYL SULFATE
ETHYLENE DIAMINE
ETHYLENE GLYCOL (DIHYDROX-ETHANE)
ETHYLENE OXIDE

F

FERRIC CHLORIDE <1%
FLUOBORIC ACID
FORMALDEHYDE (FORMALIN)
FURAN

G

GALLIC ACID
GELATIN
GLUCOSE
GLYCERINE (GLYCEROL)
GLYCOLIC ACID (HYDROXY ACETIC)
GLYCOL (ETHYLENE GLYCOL)

H

HEXAMINE
HYDROCHLORIC ACID 20%
HYDROCYANIC ACID
HYDROFLUORIC ACID 35%
HYDROFLUOSILICIC ACID
HYDROGEN CHLORIDE GAS DRY
HYDROGEN CYANIDE
HYDROGEN GAS
HYDROGEN PEROXIDE <30%
HYDROGEN SULFIDE

I

INKS
IODINE
ISOPROPYL ALCOHOL

K

KETONES - ALIPHATIC

L

LPG (PROPANE)
LACTIC ACID (TO 70°F)
LANOLINE
LEAD ACETATE
LEAD NITRATE
LEAD SULFATE
LIME SULFUR (CALCIUM SULFIDE)
LIME (CALCIUM OXIDE)
LINSEED OIL

M

MAGNESIUM BISULFATE
MAGNESIUM CARBONATE
MAGNESIUM CHLORIDE
MAGNESIUM HYDROXIDE
MAGNESIUM NITRATE
MAGNESIUM SULFATE
MALEIC ACID
MANGANESE CHLORIDE
MERCURIC CHLORIDE
MERCURIC CYANIDE
METHYL ACETONE
METHYL ALCOHOL (METHANOL)
METHYL ETHYL KETONE (TO 70°F)
MILK AND ITS BY-PRODUCTS
MONOCHLOROACETIC ACID

N

NICKEL CHLORIDE
NICKEL NITRATE
NICKEL SULFATE
NITROGEN
N-OCTANE

O

OILS ANIMAL
OILS OLIVE
OILS VEGETABLE
OXALIC ACID

P

PHENOLSULFONIC ACID
PHOTOGRAPHIC SOLUTIONS - DEVELOPERS
PHOTOGRAPHIC SOLUTIONS- (HYPO ACID FIXING BATHS)
PLATING SOLUTIONS:
- BRASS
- CADMIUM
- CHROME
- COPPER
- GOLD
- LEAD
- NICKEL
- SILVER
- TIN
- ZINC

POTASSIUM ALUMINUM SULFATE (ALUM)
POTASSIUM BICARBONATE
POTASSIUM BICHROMATE
POTASSIUM BROMIDE
POTASSIUM CARBONATE
POTASSIUM CHLORATE
POTASSIUM CHROMATE
POTASSIUM CYANIDE
POTASSIUM DICHROMATE
POTASSIUM FERRICYANIDE
POTASSIUM FERROCYANIDE
POTASSIUM HYDRATE
POTASSIUM NITRATE
POTASSIUM OXALATE
POTASSIUM SULFATE
POTASSIUM SULFIDE
POTASSIUM SULFITE
PROPYL ACETATE
PROPYL ALCOHOL (PROPANOL)
PROPYLENE CHLOROHYDRIN
PROPYLENE GLYCOL
PYRIDINE

R

RESORCINOL
ROSIN

S

SALT BRINE-SODIUM CHLORIDE SOLUTION
SEA WATER
SEWAGE
SILICONE OIL
SILVER BROMIDE
SILVER CYANIDE
SKYDROL 500 & 7000
SOAP SOLUTIONS
SODIUM ACETATE
SODIUM BENZOATE
SODIUM BICARBONATE
SODIUM BICHROMATE
SODIUM BISULFATE
SODIUM BISULFITE
SODIUM BORATE (BORAX)
SODIUM BROMIDE
SODIUM CARBONATE (SODA ASH)
SODIUM CHLORATE
SODIUM CHLORITE 5% (TO 158°F)
SODIUM CHLORIDE
SODIUM CHROMATE
SODIUM CITRATE
SODIUM CYANIDE
SODIUM DICHROMATE
SODIUM FERRICYANIDE
SODIUM FLOURIDE
SODIUM HYDROXIDE 10%
SODIUM HYPOCHLORITE
SODIUM HYPOSULFITE
SODIUM METASILICATE
SODIUM NITRATE
SODIUM PERBORATE
SODIUM PHOSPHATES
SODIUM SILICATE (WATER GLASS)
SODIUM SULFATE
SODIUM SULFIDE
SODIUM SULFITE
SODIUM THIOSULFATE (HYPO)
SODIUM TETRABORATE (BORAX)
STARCH
SUGARS AND SYRUPS
SULFUR
SULFURIC ACID (10%)
SULFUROUS ACID

T

TALL OIL
TALLOW
TANNIC ACID
TARTARIC ACID
TETRAPHOSPHORIC ACID
TRIETHYLENE GLYCOL
TRIETHYL PHOSPHATE
TRIPHENYL PHOSPHATE
TRIPHENYL PHOSPHITE
TRIPROPYLENE GLYCOL

U

UREA
URINE

V

VASELINE
VINEGAR

W

WHISKEY
WHITE LIQUOR PULP MILL
WHITE SPRIIT
WINE
WOOD PULP

Y

YEAST

Z

ZINC CARBONATE
ZINC CHLORIDE
ZINC CYANIDE
ZINC NITRATE
ZINC STEARATE
ZINC SULFATE

All statements herein are expressions of opinion, which by performance and testing are believed to be accurate and reliable; but are presented without guarantee or responsibility on our part. Statements concerning possible use of our products are made without any knowledge that such recommended use may infringe any patent. No warranty expressed or implied is made or intended.

STEVENS GEOMEMBRANES
A Division of JPS Elastomerics Corp.
Nine Sullivan Road, Holyoke, MA 01040-2800
Tel: 800/621-2281 413/533-8100 Fax: 413/552-1198 International: 413/552-1000

THERMAL SEAMABILITY AND REPAIRABILITY

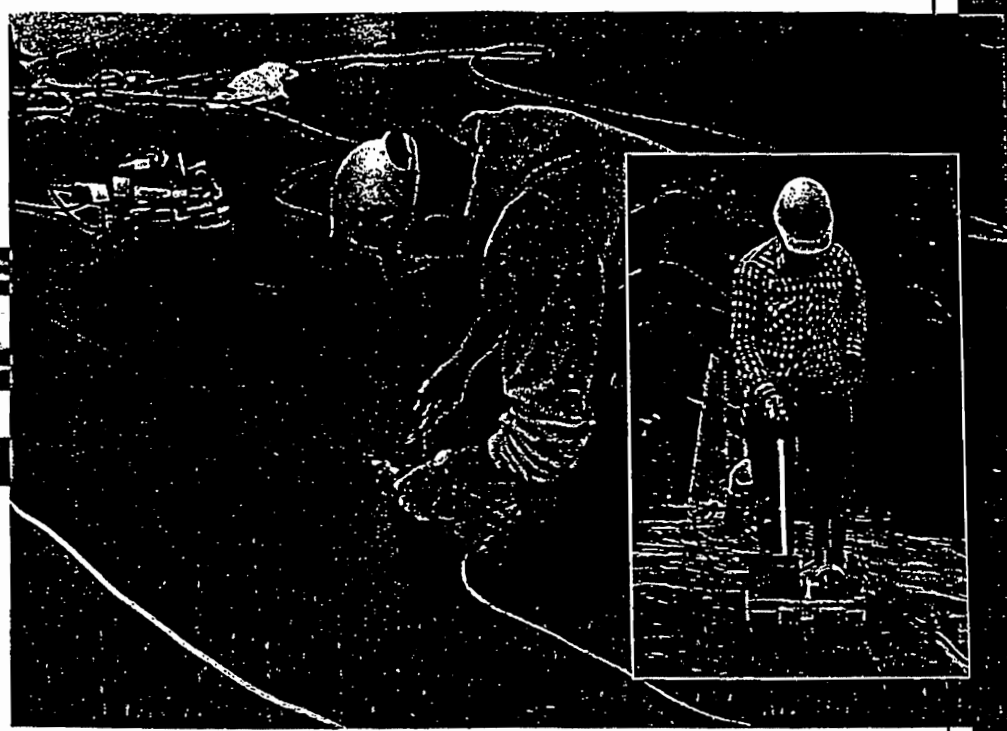

Melt Transition Range

It is estimated that nearly 90% of all geomembrane leaks occur at the field seam area. Ease of thermal seamability in a geomembrane, as well as the reliability of the resulting seam, is directly related to the *melt transition range* of the base polymer. The wider the range, the less chance of error on the part of the thermal welding equipment operator and the leaks that could result from partial or "cold" welds.

Polypropylene Melt Characteristics

Polypropylene Geomembranes (PP) have a wide melt transition temperature range as compared to polyethylenes. As measured by differential scanning calorimetry (DSC) figure 1 illustrates the approximate melt transition temperature range for Polypropylene and HDPE. The advantage of the wider melting transition observed in the case of Polypropylene as compared to the HDPE is clearly demonstrated by the thermal seaming characteristics of these two materials.

Seam Fabrication and Testing

A seam fabrication and testing program was carried out at an independent laboratory in an effort to determine the approximate seaming window for 1.15mm (45 mil) reinforced Polypropylene, 1.0mm (40 mil) LLDPE and 1.5mm (60 mil) HDPE. All materials were thermally welded with a wedge welder. The seam equipment temperature was varied while equip-

STEVENS Polypropylene

ment speed, pinch roller pressure and sheet temperature of 23°C (72°F) were kept constant.

Figure 2 illustrates the differences in the thermal seaming window for all three geomembranes. Clearly, the Polypropylene Geomembrane exhibits the widest welding temperature window at 204°C (400°F) while still maintaining a quality weld with no failures when tested in the peel mode.

Peel strength testing was also carried out for reinforced Polypropylene when seamed at a much lower ambient temperature of 7.2°C (45°F). Even at this lower temperature, Polypropylene exhibited a wide welding temperature window of 200°C (392°F) and consistently strong seams. In all cases, specimens failed at the seam edge in a Film Tear Bond (FTB) mode of failure with no indications of bonded seam area failures.

Polypropylene Seaming Advantages

Polypropylene resin, by virtue of its low crystallinity and basic composition, allows a broad process temperature range. The relative ease of thermal welding over a wide range of seaming equipment temperatures is a great advantage to the installation contractor. It provides an added measure of security to the overall project when compared to geomembranes having much narrower welding windows (melt transition ranges). This is especially important in critical containment applications.

Polypropylene Geomembrane can be welded by all thermal methods without surface preparation other than cleaning the seam area of any residual dirt or other contaminants. Unlike extrusion welding, no grinding is required, even for detail work around appurtenances or sumps.

No Stress Cracking in Polypropylene Geomembranes

Another advantage of Polypropylene Geomembranes is their low Coefficient of Linear Thermal Expansion (CLTE), which results in minimal residual stress at the seam area during thermal seaming. It has been a widely reported concern for other olefinic geomembranes where a high degree of thermal expansion will manifest itself in higher levels of residual stress at the seam area. This has contributed to the stress cracking phenomena found in HDPE geomembranes.

No Premature Sheet Aging Due to Component Migration

Due to the low-crystalline structure and polymeric compounding of the Polypropylene resin there are no plasticizers or processing aids that will leach out of the sheet material over time. This eliminates the possibility of premature sheet aging due to compound component migration.

Ease of Repair

Polypropylene does not cross-link with age. In addition, there is no need for surface grinding prior to making a repair. The material can thus be repaired readily in the field, even after many years of service, using the same thermal welding methods as those employed during installation. Repair processes are simple and generally require only a hand held hot air gun and roller with little or no surface preparation other than cleaning the seam area of residual dirt or other contaminants.

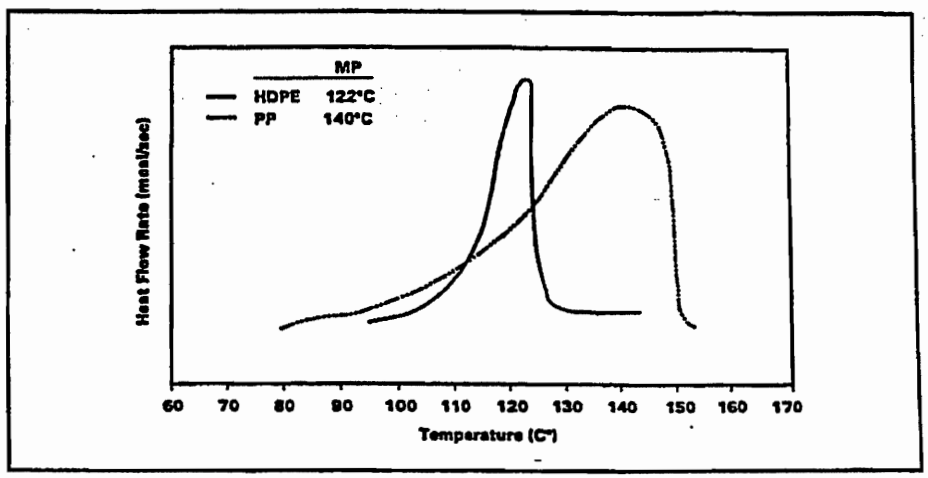

Figure 1. Approximate melt transition temperature range for two geomembrane material

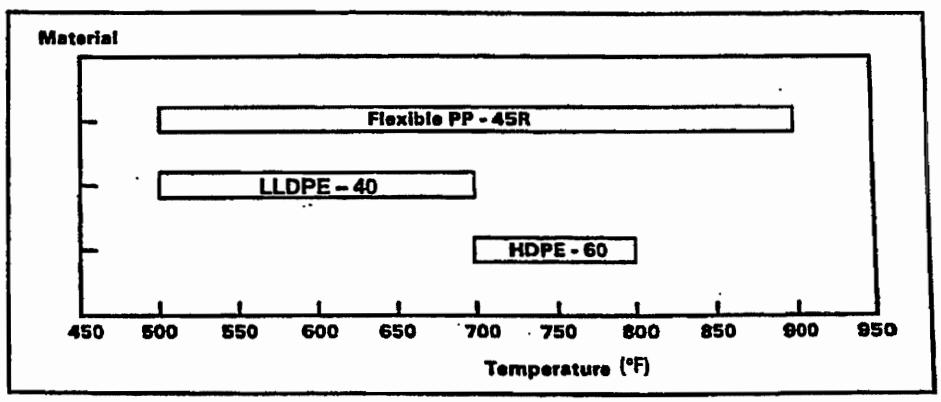

Figure 2. Approximate thermal seaming (wedge welder) temperature window comparison.

STEVENS GEOMEMBRANES

A Division of JPS Elastomerics Corp.
Nine Sullivan Road, Holyoke, MA 01040-2800
Tel: 800/621-2281 413/533-8100 Fax: 413/552-1198 International: 413/552-1000
Internet: www.stevensgeomembranes.com

COLD TEMPERATURE PERFORMANCE

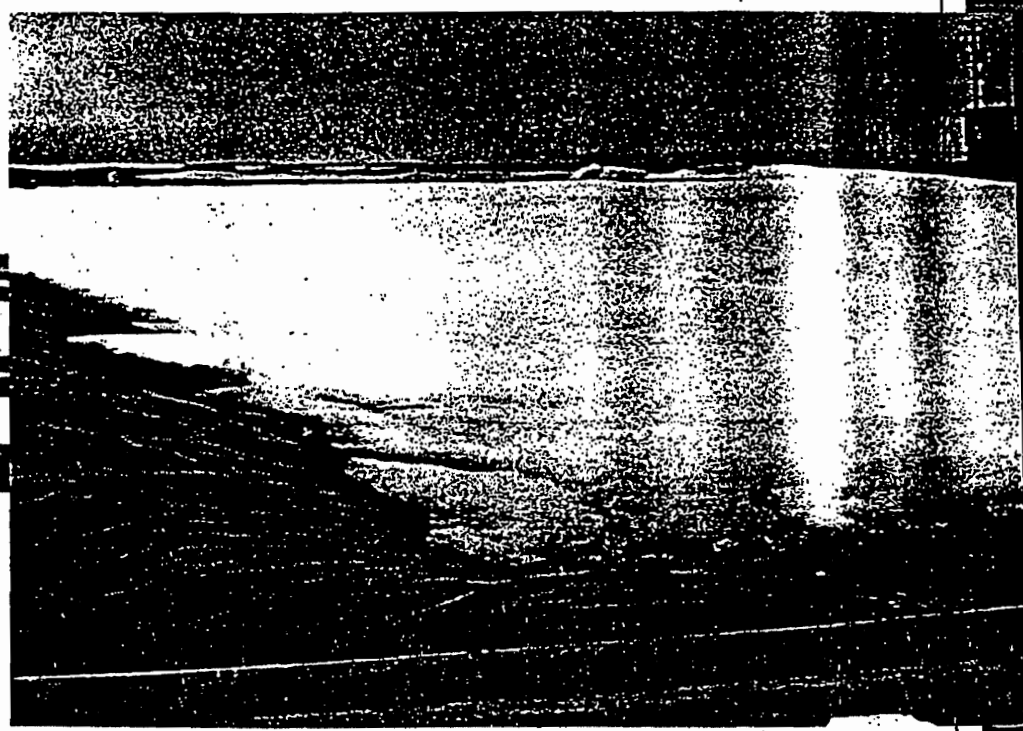

Importance of Service Conditions

Performance properties of geomembranes, particularly with reference to service conditions, are of extreme importance to the design engineer. Selection of a material should be based on the specific performance criteria required for the application. Many premature geomembrane failures have occurred in the field because critical material properties were neglected or poorly understood. This has been the case with installations where cold temperatures have contributed to poor material behavior or even failure during installation or service. For instance, it has been shown that thermally bonded seams of olefinic geomembranes (such as HDPE) are susceptible to brittleness and cracking failure at low temperatures (Rollin, 1993; Halse, 1988).

Evaluating Cold Weather Performance of Polypropylene Geomembranes

In order to evaluate the cold temperature performance of Polypropylene Geomembrane seams, a realistic test that would reflect true field behavior was selected. The procedure is called the *Dynamic Impact Test*. It is based on actual energy values required to cause specimen failure upon impact rather than the more common pass/fail tests (ASTM D746 and D2136) which do not reflect true field behavior.

STEVENS Polypropylene

Originally developed at Ecole Polytechique of Montreal (Rollin, 1991), The Dynamic Impact Test is a simple, practical method that has demonstrated the ability to detect brittle seams, especially at low temperatures. The procedure is a modified drop-weight apparatus in which a 40 cm x 26.6 cm (15.7 in x 10.5 in) seamed specimen is clamped tight at the base, while a mass is dropped from a fixed height. The mass is then increased to the point where 50% failures are achieved and an average impact failure energy can be calculated.

Dynamic Impact Test Parameters

The Dynamic Impact Test was used to evaluate sections of HDPE and Polypropylene which were thermally hot wedge seamed at various machine temperatures while keeping the machine speed constant at 3 m/min (9.8 ft/min). Seaming was performed on 1.0 mm (40 mil) thick HDPE and Polypropylene Geomembrane material using machine temperatures at the lower end of the seaming window (hot wedge, 400°C, 3m/min). The Dynamic Impact Test was performed on the fabricated seams at low temperatures. Table 1 illustrates the impact energies for HDPE seams. Table 2 illustrates the impact energies for Polypropylene.

HDPE Test Results

The mode of failure for HDPE seams show a definite trend from ductile to brittle with decreasing temperature. Failure occurred along the seam edge in a brittle mode at the lower temperature of 40°C (-40°F).

Polypropylene Test Results

In order to access the embrittlement effects on Polypropylene, the impact test was performed on the same thickness at the same test temperature. In addition, a higher seaming temperature was used to determine if there was an affect on the impact performance. At temperatures above -50°C, there were no Polypropylene seam sample failures; all samples reached the limit of the test method, which was 13kg (29 lb) dart weight dropped from a height of 1.13 m (3.7 ft). No evidence of cracking or crazing was detected. Failures were finally obtained below the Polypropylene brittleness temperature of -60°C.

The superior performances of Polypropylene may be associated with the morphology and chemical micro-structure, as it has very low crystallinity and low coefficient of linear thermal expansion (CLTE). It also contains a large amorphous region which contributes to a toughening effect, as a result of energy absorption and dissipation (Kilius, 1993).

References

Halse, Y.H., Koerner, R.M., and Lord, A.E., (1989), "Laboratory evaluation of stress cracking in HDPE geomembrane seams", *Proceedings GRI-2, Durability and Aging of Geosynthetics*, Journal Geotextiles and Geomembranes, Elsevier, pp. 177-194.

Rollin, A.L., Marcotter, M., LaFleur, J., Mlynarek, J., (1993), "The use of impact test procedure to assess seams' brittleness", *Proceedings of the Geosynthetics '93 Conference*, Vancouver, Canada pp. 1159-1573.

Rollin, A.L., Lefebvre, M., Lafleur, J., and Marcotte, M., (1991), "Evaluation of field seams quality with the impact test procedure", *Proceedings of the Geosynthetics '91 Conference*, Atlanta, USA pp. 223-237.

Kilius, D.E. (1993), "Cold Temperature Performance of Polypropylene Geomembranes and Seams", *Proceedings GRI-7, Geosynthetic Liner Systems: Innovations, Concerns, Designs*, GRI, Philadelphia, pp 191-201.

Table 1. Impact Energies for HDPE Seams

Test Temperature (C)	Impact Energy (J) (400F)
23	45
0	39
-40	25

Table 2. Impact Energies for Polypropylene Seams

Test Temperature (C)	Impact Energy (J) (400F seam)	Impact Energy (J) (500F seam)
23	>159	>159
0	>159	>159
-40	>159	>159
-50	>159	>159
-60	148	148

STEVENS GEOMEMBRANES

A Division of JPS Elastomerics Corp.
Nine Sullivan Road, Holyoke, MA 01040-2800
Tel: 800/621-2281 413/533-8100 Fax: 413/552-1198 International: 413/552-1000
Internet: www.stevensgeomembranes.com

QC SEAM TESTING FOR POLYPROPYLENE GEOMEMBRANES

Polypropylene Seaming Methods

Polypropylene Geomembranes are a member of the polyolefin family and as such are seamable by thermal methods only. The two primary methods of seaming are hot wedge and hot air welding. These methods are used on both scrim-reinforced and unreinforced Polypropylene.

Polypropylene Geomembranes can be shipped to the job site in large factory-fabricated panels of up to 25,000 ft^2 (2300 m^2). They are accordian folded and packaged for ease of shipping and handling. Prefabricated panels ensure excellent seams because they are formed under controlled factory conditions and greatly reduce the amount of field seaming required.

Broad Melt Transition Range

The broad melt transition range for Polypropylene provides the widest thermal seaming window available for olefinic geomembranes. Consistent seam strengths are obtained over a wide range of variable seaming parameters, such as wedge or hot air temperature, machine speed, and nip roller pressure. Thus, the material is installer-friendly and may be seamed even under many adverse conditions. Consistent seam strengths with no separation at the bond are obtained due to a true fusion of material. (Shah, 1993)

Destructive Testing

Although non-destructive testing may indicate seam continuity, destructive tests are still required

STEVENS Polypropylene

to verify seam strength, homogeneity, and completeness of the bond area.

Typical destructive procedures used are the bonded seam strength (shear) and peel strength test methods. Because Polypropylene Geomembranes can be either scrim reinforced or non-reinforced, the following destructive test guidelines are offered:

Scrim-Reinforced Polypropylene:

Single hot wedge, dual "split" hot wedge, or hot air seaming methods.

SHEAR STRENGTH: For scrim reinforced geomembranes, the bonded seam strength (shear strength) is determined in accordance with ASTM D-751 as modified by NSF Standard 54. In this procedure, the test specimen is 100 mm (4-in.) in width and has a total length of 230 mm (9-in.) plus the width of the seam as shown in figure 1. The clamps used to secure the specimen are 25 x 25 mm (1 x 1-in.) and the distance between the clamps at the start of the test is 152 mm (6-in.) plus the width of the seam (see figure 1). Testing speed is 305 mm/min. (12-in./min.). Five specimens are normally tested and maximum load in kN (lbf) at specimen yield or break is recorded. Note that the max load is in kN (lbf) and not kN/M (lbf/in.) due to the test method configuration.

PEEL STRENGTH: The peel strength for scrim-reinforced polypropylene is determined in accordance with ASTM D-413 as modified by NSF Standard 54. In this test procedure, a 25 mm (1-in.) wide strip specimen is peeled by "T" peel at 180° at a test speed of 50 mm/min. (2-in./min.). Grip separation is normally 25 mm (1.0-in.) with the "T" seam centered. The maximum peel strength is KN/M (lbf/in.) and is the average of the five highest peaks.

In the case of a film tear bond (FTB), the specimen will not fail but will separate in the plane of the scrim and the resulting value will be the ply adhesion, which is usually greater than 114 kN/M (20 lb/in.).

It should be noted that QC samples cut from the seam area must have a minimum length of 760 mm (30-in.) to accommodate five shear and five peel specimens.

Unreinforced Polypropylene:

Single hot wedge, dual "split" hot wedge, or hot air seaming methods.

Polypropylene Geomembranes are semi-crystalline thermoplastics, but unlike the higher crystalline HDPE, the Polypropylene polymer is very flexible with a high degree of working strain and no definitive yield point.

SHEAR STRENGTH: For unreinforced Polypropylene Geomembranes, the bonded seam strength (shear strength) is measured in accordance with ASTM D-3083 as modified by NSF Standard 54, which permits either method A or B of ASTM D-882. In this method, a 25 mm (1-in.) wide strip specimen is used. A grip separation of 100 mm (4-in.) plus the width of the seam (with the seam centered) is used with a test speed of 508 mm/min. (20-in./min.). Five specimens are tested to 200% elongation. The load at any breaks below 200% strain, as well as the location and type of break, are recorded. If no breaks occur below the 200% limit, the sample passes shear testing.

PEEL STRENGTH: The peel strength of unreinforced Polypropylene is determined with a 25 mm (1-in.) wide strip specimen peeled by "T" peel at 180° and a test speed of 508 mm/min. (20-in./min.). Grip separation is 25 mm (1-in.) with the "T" seam centered. Five specimens are tested to 400% elongation (measured by grip separation). The load at any breaks or seam separation below 400% strain are recorded as well as mode of failure and location. If no peel separation occurs below the 400% limit, the sample passes peel testing. In the case of dual "split" hot wedge, both tracks should be tested in peel.

Non-Destructive Testing

Non-destructive testing is the evaluation of the continuity of the bond area joining adjacent rolls or panels together without damaging the geomembrane. The methods used do not generally detect a defect but rather check for a continuous, void free length of seam.

The methods currently used include air lance, dual seam pressure test, and mechanical point stress, all of which are well documented in ASTM D-4437 and ASTM D-4545. The air lance and mechanical point stress tests are commonly used in the factory fabrication of panels; all methods can and have been used in the field. For the dual "split" hot wedge seam method, the GRI/GM6 test procedure for pressurized air channel is usually followed.

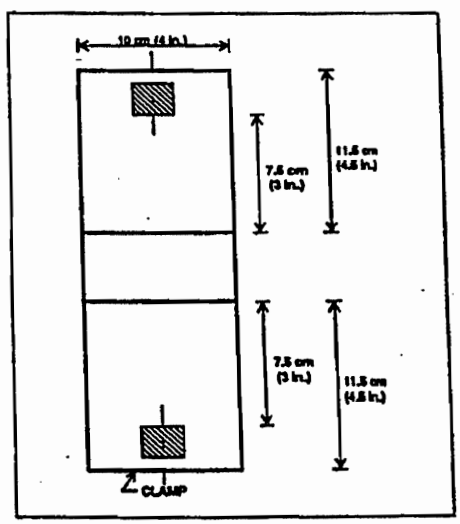

Figure 1. Destructive seam test specimens.

STEVENS GEOMEMBRANES
A Division of JPS Elastomerics Corp.
Nine Sullivan Road, Holyoke, MA 01040-2800
Tel: 800/621-2281 413/533-8100 Fax: 413/552-1198 International: 413/552-1000
Internet: www.stevensgeomembranes.com

DIRECT SHEAR/INTERFACE FRICTION

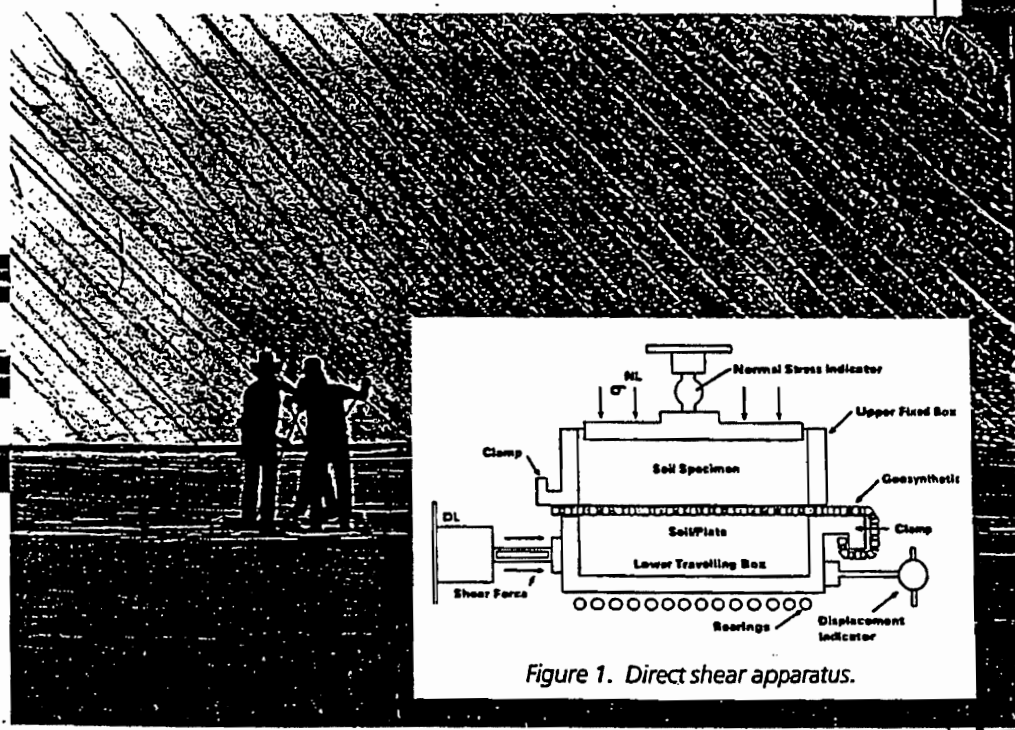

Figure 1. Direct shear apparatus.

Gravity vs. Interface Bonds

In many applications, such as the lining of waste containment facilities, landfill covers, or liquid impoundments, a geomembrane will be applied to an inclined surface. This will lead to a component of gravitational force acting in the plane of the geomembrane, which can cause it or its cover soil to slide down the inclined surface. Consequently, it is important to be able to assess the bond properties of the interface between the geomembrane and the inclined surface, especially under simulated overburden load conditions.

Bond strength may be frictional, cohesive or a combination of the two. Also, for some geomembrane applications some protection for the upper surface of the geomembrane may be necessary to reduce the possibility of abrasion, tearing and puncture. The form of this surface protection may simply be a layer of soil. However, in canal and reservoir linings, this surface protection may be comprised of erosion resistant rock, a soil layer, and a geotextile underliner. Obviously, consideration must also be given to the frictional properties at the various interfaces involved.

ASTM TEST METHOD D5321-92

In order to effectively evaluate the site-specific frictional characteristics of a geosynthetic against soil, another geosynthetic, or any combination thereof, the test specimen size and test apparatus

must be large enough to model field conditions. A large scale performance test has been developed for determining frictional characteristics by the direct shear method: ASTM D 5321-92, "Standard Test Method for Determining the Coefficient of Soil and Geosynthetic or Geosynthetic and Geosynthetic Friction by the Direct Shear Method."

The coefficient of friction is determined by placing the geosynthetic and one or more contact surfaces within a large direct shear box as shown in figure 1. A constant normal compressive force is applied to the specimen, and a shear force is applied to the apparatus so that one section moves in relation to the other section. Shear force is recorded as a function of horizontal displacement.

The test is performed for a minimum of three different normal stresses to model field conditions. Peak (or residual) shear stresses are plotted against the applied normal compressive stresses. The slope of the plotted data is the coefficient of friction.

Polypropylene Results

In an effort to evaluate the interface friction characteristics of reinforced Polypropylene Geomembrane (PP), direct shear testing was carried out in accordance with ASTM D 5321-92 . Three soil types were chosen to provide a soil classification range from cohesive (clay) to non-cohesive (sand). The three types chosen were as follows:

Soil	*USCS Classification*
Ottawa Sand	*SP*
Texas Clay	*CL*
Volcanic Clay	*CH*

Table 1 illustrates the interface values for reinforced Polypropylene against the three soil types. Due to the relatively soft or elastomeric-like feel of Polypropylene, plus the surface texture imparted by the reinforcing scrim, soil particles readily embed in the surface giving it a high coefficient of friction as compared to other geomembranes.

Polypropylene vs LLDPE & HDPE

To further evaluate and compare reinforced Polypropylene interface characteristics with LLDPE and HDPE under the same conditions, a commonly available cohesionless Ottawa sand was used. Table 2 illustrates the higher friction angles and soil/geomembrane efficiencies obtained with the Polypropylene Geomembrane as compared to HDPE and LLDPE. Figure 2 is a graphical representation of the friction angles obtained for the sand/geomembrane interface.

It is important to note that the surface texture and the flexible characteristics of scrim-reinforced Polyprolylene allow the material to readily conform and "lock in" to soil surface irregularities under load, thus giving even more of a factor of safety against sliding. This has been observed in both field and laboratory testing.

Table 1.Direct Shear Tests

Material Condition (45-mil Reinforced Polypropylene)	Ottawa Sand (SP)		Silty Clay (CL)		Clay (CH)	
	Ca	ø	Ca	ø	Ca	ø
Natural Condition	0.6	31	0.7	26.4	1.7	16
Wetted Condition	0.5	26.2	0	24.8	2.3	17.6

Ca = apparent adhesion in psi (1 psi = 6.9 KPa).
ø = interface friction angle in degrees.

Table 2. Direct Shear Summary for Ottawa Sand

	Friction Angle δ Geomembrane to Soil (Ottawa Sand ø = 35 deg.)	Efficiency (Tan δ /Tan ø)
HDPE (MDPE)	16	38
LLDPE	21	54
Non-reinforced Polypropylene	29.5	80
Reinforced Polypropylene	31	86

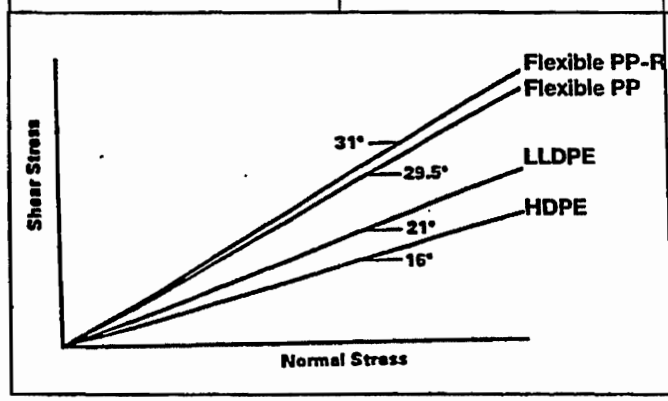

Figure 2. Direct shear comparisons, friction angles, Ottawa sand vs. geomembranes

STEVENS GEOMEMBRANES
A Division of JPS Elastomerics Corp.
Nine Sullivan Road, Holyoke, MA 01040-2800
Tel: 800/621-2281 413/533-8100 Fax: 413/552-1198 International: 413/552-1000
Internet: www.stevensgeomembranes.com

PP TF 05 2/98 © Copyright 1998 JPS Elastomerics Corp.

ULTRAVIOLET RESISTANCE

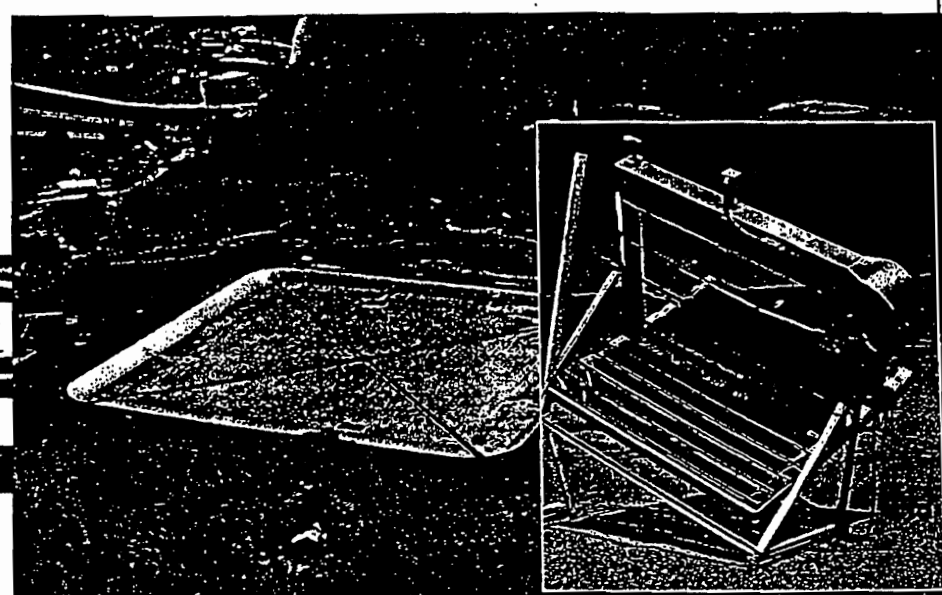

Figure. 1. EMMAQUA concentrated sunlight test focuses natural sunlight from 10 flat mirrors onto samples mounted on a target plane.

Ultraviolet Radiation

Ultraviolet (UV) radiation is one of the most damaging components of the suns rays. Each year thousands of products fail because these invisible rays can break down chemical bonds in a material's polymer chains and weaken it. Once this breakdown starts, it is not unusual for other elements to accelerate the loss of integrity. Additionally, ultraviolet radiation can cause certain components to migrate out of the base product, i.e. plasticizers out of a polyvinyl chloride (PVC) membrane, leaving it brittle, subject to mechanical damage or cracking.

Geomembrane systems that will be exposed (non-buried) must, therefore, be resistant to the degrading effects of ultraviolet radiation. Otherwise, cracks or other UV-induced damage could result in total sheet failure and the resulting liabilities associated with such an occurrence.

Weathering Testing

Because some geomembranes resist ultraviolet radiation better than others, a comparison of their weatherability characteristics should be made before final material specification is made. Several tests exist which can predict the characteristics of materials under these conditions. Each has advantages and disadvantages.

Real-Time Testing exposes membrane samples to actual weathering conditions for a des-

STEVENS Polypropylene

ignated amount of time--5, 10, or 15 years. The samples are then taken to a laboratory where they are evaluated for physical properties and overall performance. While this is the most accurate method for testing long-term performance and UV resistance, it is not a realistic primary reference for geomembrane manufacturers because of the length of time required for the test. And since weather conditions and patterns vary in different geographic regions, the test results can vary widely and are not valid across the country.

Xenon-Arc Weatherometer Testing subjects geomembrane samples to a long-arc, water-cooled xenon lamp that operates at a standard 0.35 W/m² at 340 nm. The light and heat radiance is kept at a predetermined level through a monitoring device. Geomembrane samples are periodically moistened by a water spray at preset intervals and subjected to temperatures of 80 ± 3°C (170 ± 6°F) and to a specific ultraviolet light. The procedure is carried out at a preselected dry exposure time and with a combination of light and water spray according to a cycle defined in the standard specification for each generic material.

This test produces the most accurate man-made sunlight of all laboratory test methods. It is also the shortest of the accelerated test (i.e. 2000 hours or 83 days). However, since it has been discovered that some heat stabilization packages may fail at 2200 hours, JPS tests its proprietary stabilized products to a minimum of 4000 hours or 167 days at 80°C (170°F).

EMMAQUA concentrated sunlight (Equatorial Mount with Mirrors for Acceleration with Water) is presently the best alternative to real-time testing for determining the long-term weatherability (UV resistance) of a geomembrane.

The test uses a Fresnel-reflecting solar concentrator and 10 flat mirrors to reflect and concentrate natural sunlight onto membrane samples mounted on a target plane (see figure 1). The apparatus automatically follows the sun's movements across the sky, resulting in the maximum amount of sunlight (roughly equivalent to the radiation from eight suns). Excess heat is drawn away from the membrane, and samples are intermittently sprayed with water to simulate the wet/dry cycle that can cause migration of volatile stabilizers and other ingredients from some geomembranes.

The EMMAQUA test is the most realistic and accurate accelerated weather test because it exposes samples to the full spectrum of actual concentrated sunlight. It uses the right combination of testing conditions, including UV light, water, dew, heat, and cold, to produce degradation comparable to the worst natural weathering conditions. In addition, test results can be converted into a reasonable real-time weathering estimate for a specific geographic region (see table 1). More important, the test results can be repeated and non-simultaneous test results are comparable with a minimum margin of error.

The disadvantage of this test is that it takes 18 to 36 months to complete and is fairly expensive.

Testing Polypropylene

Flexible Polypropylene Geomembranes are well suited to prolonged outdoor exposure in applications such as floating covers, waste water treatment ponds, solar ponds, fish hatcheries, wastepile covers or industrial evaporation ponds.

Extensive UV resistance testing has been completed and additional analysis is ongoing. At time of printing, *Xenon Arc Weather-ometer* (ASTM G26) exposure on the formulations tested exceeds 8000 hours at 80°C (170°F) with no indication of visual surface deterioration.

In addition, extensive outdoor exposure testing in Florida and Arizona using the *EMMAQUA* accelerated aging techniques (ASTM G90) are in progress. At time of printing, Polypropylene Geomembranes under test have passed the 4 million Langley (2267 MJ/M² UV) mark with no evidence of visual surface deterioration

Table 1. Conversion of EMMAQUA Exposure to Real Time

Location	A	B
Albuquerque, NM	484	22
Argonne Nat'l Lab	327	34
Atlanta, GA	375	30
Cape Hatteras, NC	394	28
Fairbanks, AK	250	44
Grand Junction, CO	457	24
Los Angeles, CA	444	24
Miami, FL	451	24
New York, NY	323	34
Oak Ridge, TN	356	30
San Antonio, TX	411	26
Seattle/Tacoma, WA	307	36

A = Average Langleys received per day, based on 5-year average, 1966 to 1970, of global solar radiation earth's surface, as received on a horizontal surface; data base obtained from measurements reported by U.S. Weather Bureau.

B = Number of years required to obtain 4 million Langleys at location indicated.

STEVENS GEOMEMBRANES

A Division of JPS Elastomerics Corp.
Nine Sullivan Road, Holyoke, MA 01040-2800
Tel: 800/621-2281 413/533-8100 Fax: 413/552-1198 International: 413/552-1000
Internet: www.stevensgeomembranes.com

DIMENSIONAL STABILITY DURING EXTREME TEMPERATURE CHANGES

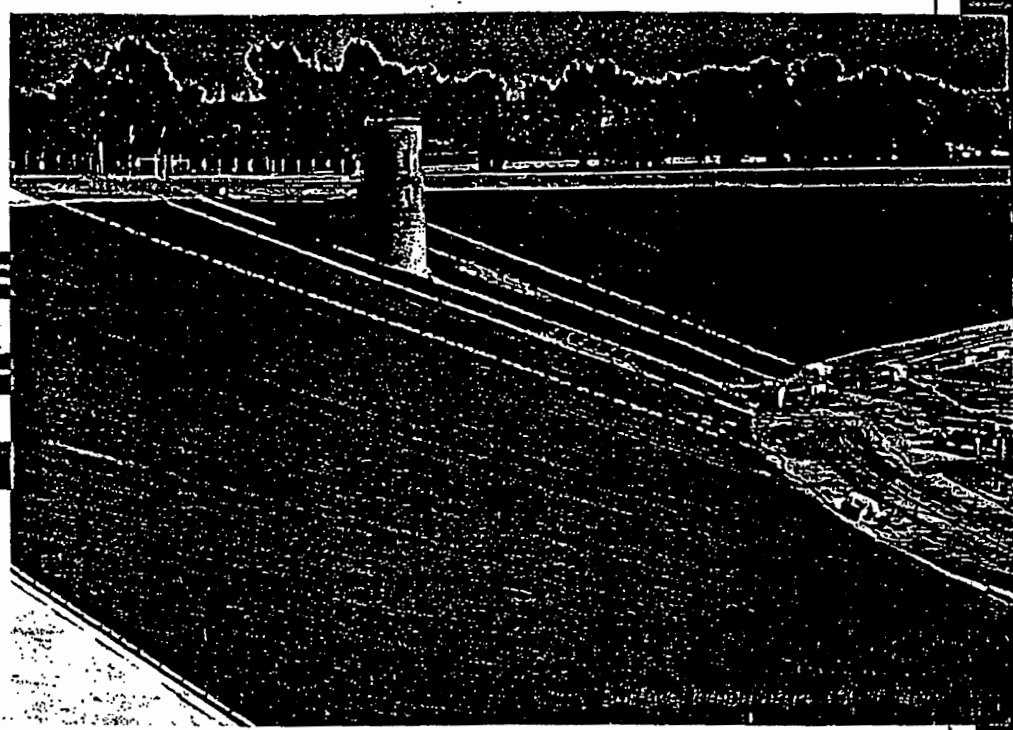

Coefficient of Linear Thermal Expansion (CLTE)

When a geomembrane is heated during the day by exposure to direct sunlight and then experiences rapid and significant cooling at night, the sheet will experience expansion and contraction. These changes can occur during and/or after installation, and can be extreme in the case of black membranes which will absorb more heat during the day than light colored membranes. Excessive movement (expansion and/or contraction) of any geomembrane due to temperature changes is undesirable for the following reasons:

- Improper alignment of seams and overlap during installation.
- Wrinkles induced during high temperature can effect seaming and placement, creating residual stress upon seams during cooling contraction.
- Excessive sheet stress during cold weather as contraction draws membrane tight.
- Excessive wrinkles during service which will effect cleaning methods and provide constant bending stress in the sheet and seam areas.
- Excessive movement of sheet material on the side slopes can lead to creep failure.
- Less direct contact area with a clay subgrade at wrinkles.

Testing for CLTE

Polypropylene Geomembranes (PP) were tested in accordance with ASTM

STEVENS Polypropylene

D-696 (Test Method of Coefficient of Linear Thermal Expansion of Plastics) and compared to HDPE.

Polypropylene vs. HDPE

Polypropylene Geomembranes inherently have a much lower coefficient of thermal expansion as compared to other olefinic geomembranes. This results in a high degree of dimensional stability when exposed to large temperature changes.

The CLTE for both reinforced and unreinforced Polypropylene Geomembranes over a variety of temperature ranges is less than half that of HDPE, as shown in Figure 1. This results in excellent lay-flat characteristics in either exposed or buried applications, regardless of the weather conditions or surface temperature of the sheet. Figure 2 illustrates the comparative maximum linear displacements per 30.5M (100 ft) length of three geomembrane materials (HDPE, Polypropylene, Reinforced Polypropylene) when exposed to a 32°C (90°F) temperature change, a typical range seen during installation.

Design Considerations

It is particularly important to note that scrim-reinforced Polypropylene exhibits only 35 percent of the movement measured on unreinforced Polypropylene, and only 14 percent of the maximum dimensional change measured in HDPE. This makes it the preferred product for exposed applications. Therefore, whether specifying unreinforced or reinforced Polypropylene, the design engineer can be assured that excessive movement should not occur and should not affect the final installed system, even under demanding temperature extremes. This is an important consideration, especially when designing for an application requiring long-term exposure to the elements.

In addition, stresses on Polypropylene seams will be minimal, even during wide temperature cycles. Residual stresses at the seam area due to thermal seaming are also minimal for Polypropylene, whereas this is a genuine concern for olefinic geomembranes such as HDPE, especially in exposed applications.

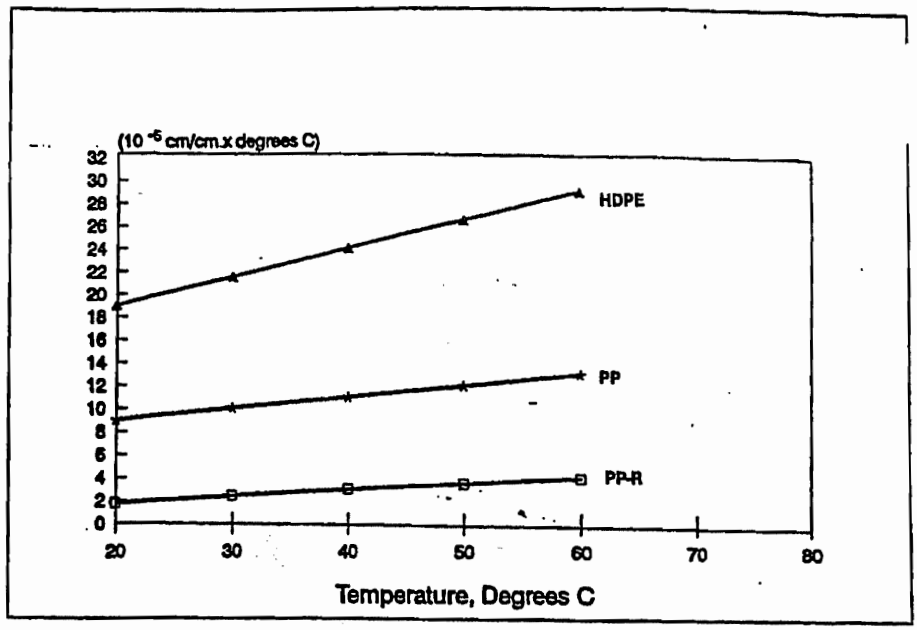

Figure 1. Coefficient of linear thermal expansion (machine direction) of olefinic geomembranes, ASTM D-696.

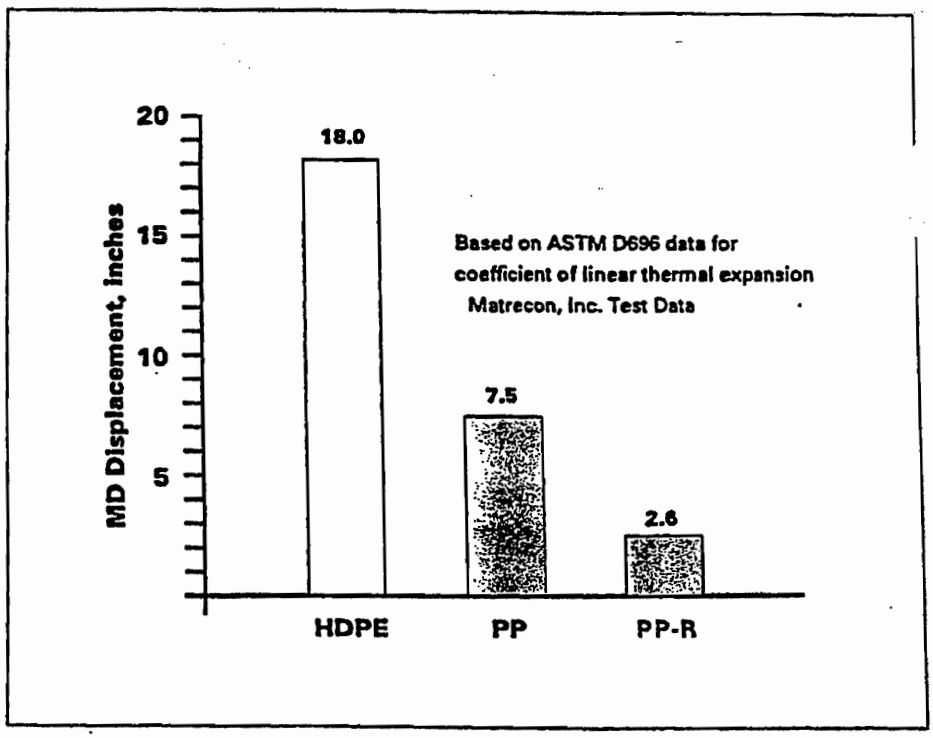

Figure 2. Maximum MD displacement per 30.5m (100 ft) length of geomembrane when exposed to a 32 °C (90 °F) temperature change ranging from 20-70 °C (68-158 °F).

STEVENS GEOMEMBRANES

A Division of JPS Elastomerics Corp.
Nine Sullivan Road, Holyoke, MA 01040-2800
Tel: 800/621-2281 413/533-8100 Fax: 413/552-1198 International: 413/552-1000
Internet: www.stevensgeomembranes.com

SITE CONFORMANCE: DURING SETTLEMENT OR SUBSIDENCE

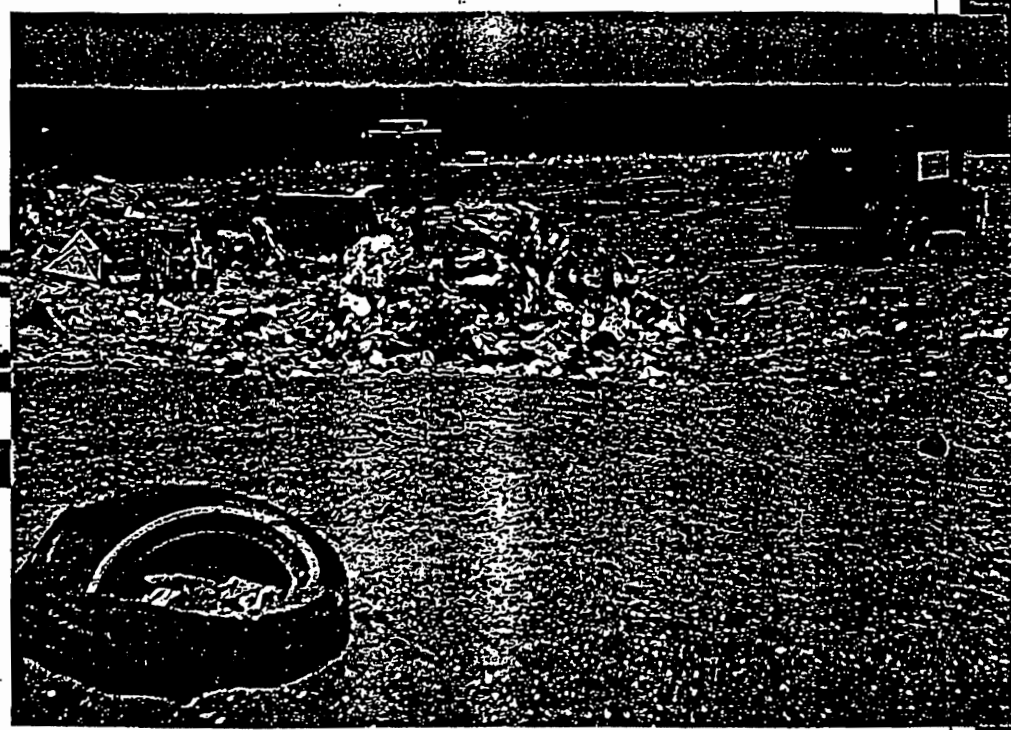

Critical Design Factors

The mechanical behavior of geomembranes, particularly their tensile properties, is extremely important to the engineer designing an impoundment, waste containment cell, heap leach, or other civil project requiring the use of a synthetic barrier to liquid or gas. Properties such as tensile load per unit width, elongation to yield or break, yield and breaking stress, and modulus can be key design parameters.

Understanding the effects on the geomembrane of out-of-plane loading that could occur during localized subsidence or uneven settlement is especially important. Geomembrane field response to loading and subsequent stress-strain characteristics can vary significantly compared to small uniaxial strip tensile laboratory testing.

Evaluating Out-of-Plane Loading

Therefore, to accurately evaluate out-of-plane geomembrane loading, the test specimen size must be large enough to evaluate the total structure. Variations in mechanical properties of diverse materials, i.e. stiff semi-crystalline thermoplastic versus a flexible reinforced thermoplastic, must also be considered.

Within the last few years, large scale performance tests have been used to simulate field stresses and to act as a comparative test method due in part to the size of test speci-

STEVENS Polypropylene

mens involved. The Standard Test Method for "Multi-Axial Tension Test for Geosynthetics" has been standardized by ASTM (D5617). Figure 1 schematically illustrates the upward burst multiaxial test procedure commonly used to accurately measure pressure (air or water) versus central deflection.

Multi-Axial Tension Testing of Polypropylene Geomembranes

As part of the development program for Polypropylene Geomembranes (PP), the multi-axial tension test was chosen as the performance tensile test which best simulates out-of-plane loading that would occur in actual field subsidence or settlement.

A 27-inch diameter test specimen was placed on the base plate, the top ring placed over the specimen and bolted into place, sealing the specimen to the base plate. Air pressure was introduced incrementally at a rate of 7 kPa (1 psi/min) until failure occurs. Central deflection measurements were recorded for each 1 psi pressure increase. Assuming spherical deformation, stress and strain in the specimen can be calculated and plotted as a stress/strain curve from the pressure versus central deflection measurements. Comparative stress/strain graphs for Polypropylene, HDPE and LLDPE are shown in figure 2.

Failure Mechanism Evaluation

The large diameter procedure permits evaluation of failure mechanisms. For example, HDPE always fails by tearing in the manufactured machine direction (usually along an extrusion mark). Conversely, Polypropylene shows no preference to ultimate failure direction, even when manufactured by extrusion.

This same procedure is also used to investigate the effect of surface scratches (site damage) on the working strain of the material. HDPE has been found to fail prematurely when tested with scratches (i.e., a cut 10-20% of the thickness), whereas the only affect on Polypropylene is a moderate drop in ultimate working strain. Polypropylene is much more resistant to surface abrasion due to the inherent toughness of the polymer.

High Conformance Characteristics of Polypropylene Geomembranes

Unreinforced Polypropylene Geomembrane has relatively low modulus and high extensibility, giving it high conformance characteristics. This is especially important in liner applications where subsidence conditions could cause a highly crystalline geomembrane to fail. Unreinforced Polypropylene elongates and readily conforms to the substrate at very low levels of stress without failure. This high working strain is very desirable when designing for large movements under load, such as in a landfill cap or where there may be seismic movement.

Scrim-reinforced Polypropylene has high modulus, resulting in a higher ultimate strength and elongation than, for example, 1.5mm (60 mil) HDPE, which fails immediately after reaching yield at 17.2 MPa (2500 psi) and approximately 10-12% strain. By comparison, reinforced Polypropylene exhibits over 25% strain at yield (scrim break) at over 24.8 MPa (3600 psi) breaking stress.

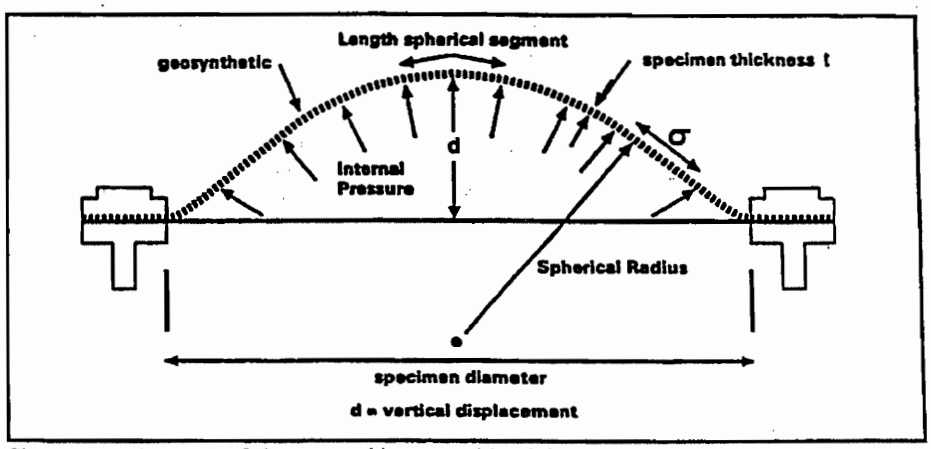

Figure 1. Schematic of the upward burst multi-axial tension test apparatus.

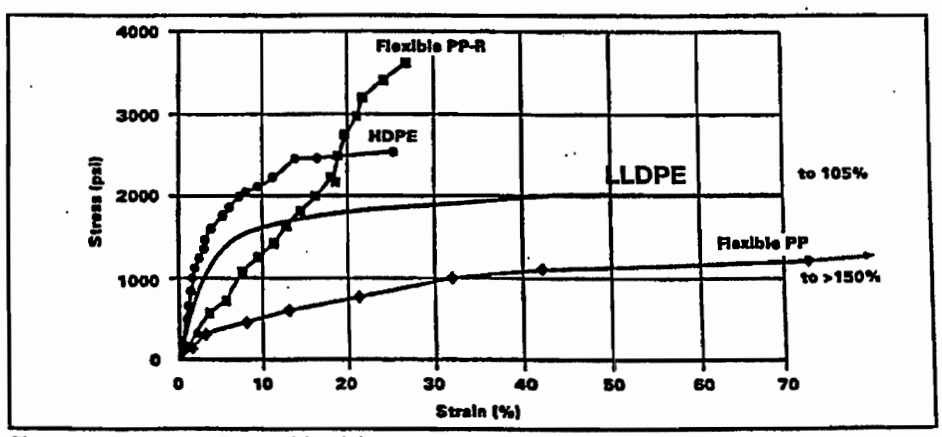

Figure 2. Comparative multi-axial tension test results.

STEVENS GEOMEMBRANES

A Division of JPS Elastomerics Corp.
Nine Sullivan Road, Holyoke, MA 01040-2800
Tel: 800/621-2281 413/533-8100 Fax: 413/552-1198 International: 413/552-1000

SUBGRADE CONFORMANCE: PUNCTURE RESISTANCE

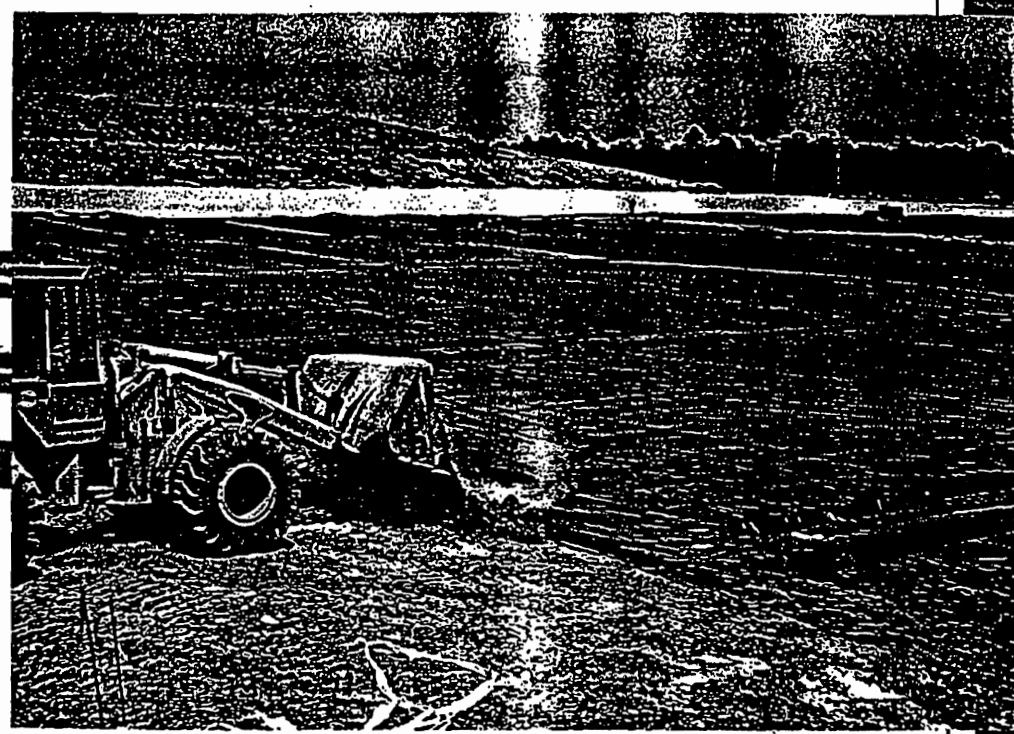

Inherent Conformability

Polypropylene Geomembranes have the inherent ability to elongate and conform to subgrade irregularities and protrusions under stress. This translates into very high puncture resistance and working strain that permits the material to readily take the shape of a protrusion or underlying aggregate without rupture.

Additionally, point loading occurs at natural undulations of a side slope, a factor unaccounted for in typical testing procedures. The conformability of Polypropylene permits extra shear interface points for maximum holding power on side slopes.

Two basic types of puncture tests exist: small and large scale.

Small-Scale Testing

There are three basic concerns with the small-scale testing that has historically been used to evaluate out-of-plane point loading of a geomembrane as it occurs in the field. First, the test specimen size must be large enough to evaluate the planar structure and strain response of the material. An additional consideration is the distinct difference in the mechanical properties of a stiff semi-crystalline thermoplastic versus a flexible reinforced or non-reinforced thermoplastic. A final concern is that index testing does not represent field performance.

For these reasons, small scale index tests such as ASTM D4833-88 (Test Method for Index Punc-

ture Resistance of Geosynthetics) may be applicable for quality control but will not correlate or approximate field performance. For example, HDPE, when tested using ASTM D4833, gives a comparatively high "puncture resistance." However, the same HDPE material tested over a large surface area and allowed to conform under load over simulated subgrade points exhibits the lowest comparative puncture resistance.

Because of the above mentioned concerns, an alternative test was sought for use in development of Polypropylene Geomembranes.

Large Scale Testing

Within the past few years, large scale performance tests have been accepted for simulating field stresses and to act as a comparative test method. The large diameter point stress test has been standardized ASTM as "Large Scale Hydrostatic Puncture Test" (ASTM D5514). Figure 1 schematically illustrates this type of test device with "standard" puncture shapes in place.

This test method can also be used to evaluate a geomembrane under actual site-specific materials such as large aggregate or drainage material. In addition, it can be used to study the mechanism of failure over protruding objects. For example, HDPE goes to yield and immediately thins out at the top of a protrusion, resulting in puncture failure. Highly extensible materials, however, will conform under working strain and attempt to fill voids, which may instead result in a burst failure.

Independent Test Results

To compare the puncture resistance of various products, independent laboratory testing was carried out using the large scale hydrostatic puncture test method (ASTM 5514) with standard shape truncated cones for puncture points. This test simulated the relative puncture resistance of a geomembrane when subjected to gradually increasing over-burden pressures. The heights of the truncated cones were varied from test to test and plotted as cone height versus pressure at failure. From a series of plots the critical cone height (CCH) was determined, which represents the approximate maximum protrusion height. Results of this testing are graphed in figure 2.

Conclusions

The test results show that the CCH, which is the maximum extension/elongation that a geomembrane can withstand before break, was 4 to 4.5 cm (1.6 to 1.8 in) for reinforced 1.15 mm (45 mil) Polypropylene, as compared to 1.0 cm (0.4 in) for HDPE. The internal scrim reinforcement of the Polypropylene (PP) sheet imparts high tensile strength while the total composite (Polypropylene and scrim) allows approximately four times the extension to yield as the HDPE.

Unreinforced Polypropylene shows superior substrate conformance and puncture resistance properties even when exposed to the maximum point height of the equipment. The CCH for unreinforced Polypropylene was found to be greater than 10 cm (4.0 in) as compared to the maximum 7.5 cm (2.95 in) for LLDPE.

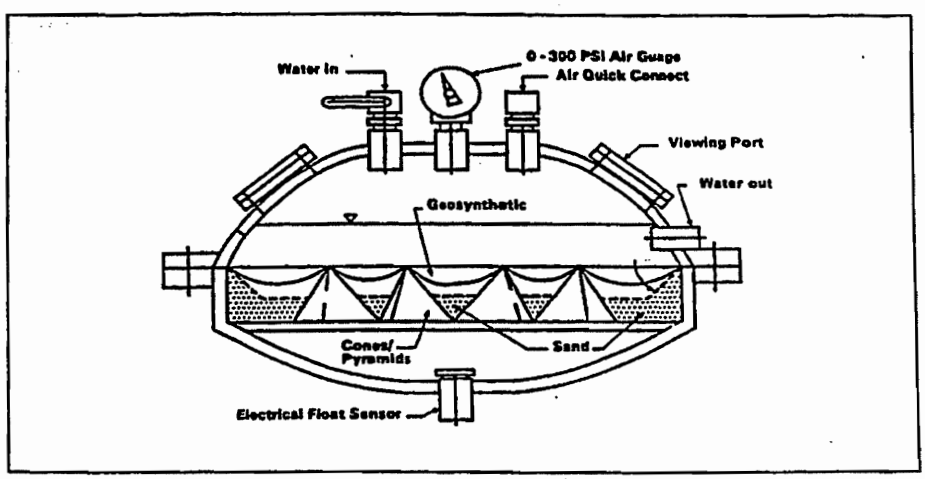

Figure 1. Large scale hydrostatic puncture apparatus

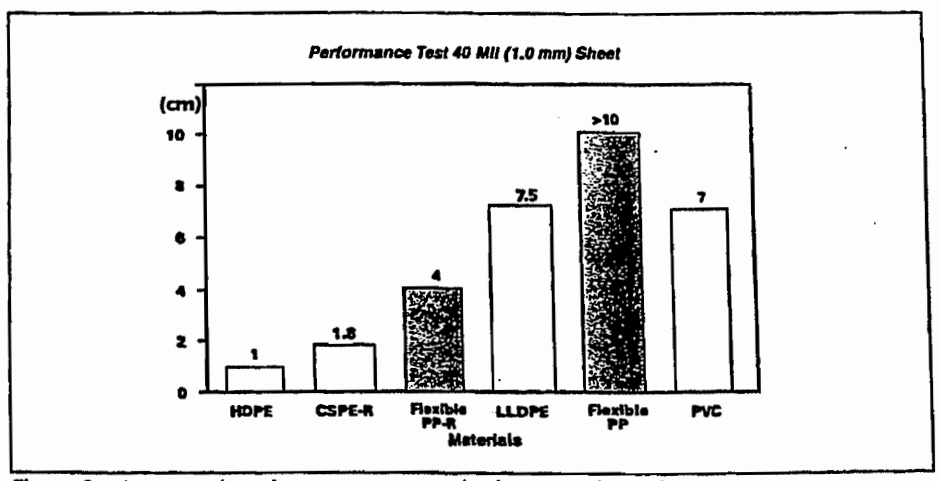

Figure 2. Large scale point stress test results (truncated cone)

STEVENS GEOMEMBRANES
A Division of JPS Elastomerics Corp.
Nine Sullivan Road, Holyoke, MA 01040-2800
Tel: 800/621-2281 413/533-8100 Fax: 413/552-1198 International: 413/552-1000

E-3 – Data Logger Manufacturer Data

Water Log Series, Model H-500 and H-500XL

Contact Information:

Design Analysis Associates, Inc.
H_2OFX Division
72 West 100 South
Logan, UT 84321
435-751-2212
www.waterlog.com

Model
H-500

WATERLOG® SERIES

Owner's Manual

NOTICE

This product embodies technology that is confidential and proprietary technology of DESIGN ANALYSIS ASSOCIATES, INC., and which is protected by United States copyright laws and international copyright treaty provisions, and/or by contract and applicable laws of trade secrecy. These include all Software, Printed Circuit Board Artwork, Schematic Diagrams, and Technologies applied therein. The enclosure encasing the electronics of this instrument may not be opened without written consent of DESIGN ANALYSIS ASSOCIATES, INC., and any attempt to do so without such written authorization constitutes a breach of contract and will also void any applicable warranty for the product.

Document Number: H500000
Document Authors: Mike Nelson
Revision: 2.00

H_2OFX®
A Division of Design Analysis Associates, Inc.

75 West 100 South
Logan, UT 84321 USA
Phone: (435) 753-2212
Fax: (435) 753-7669

Table of Contents

User Agreement/*WATER*LOG® Warranty W-1

Preface: Message to the H-500 User P-1

Chapter 1 Introduction

1.1 Uses, Functions, and Attributes of the H-500 1-1
1.2 About This Manual 1-2
1.3 Unpacking the H-500 1-3
1.4 Introduction to the H-500 1-4

Chapter 2 Installation

2.1 Installing the H-500 2-1
2.2 Testing the Installation 2-3

Chapter 3 Operation

3.1 Overview 3-1
3.2 Configuring the H-500 3-1
3.2.1 Keyboard/Display Basics 3-1
3.2.2 Using the Parameter Editor 3-2
3.3 Editing H-500 Parameters 3-3
3.3.1 System Status 3-3
3.3.1.1 Battery Voltage 3-3
3.3.1.2 Minimum Battery Voltage 3-4
3.3.1.3 Maximum Battery Voltage 3-4
3.3.1.4 System Resets 3-4
3.3.1.5 Status 3-4
3.3.1.6 Reset Stat Screens? 3-5
3.3.1.7 Firmware Revision 3-5
3.3.1.8 Checksum Test 3-5
3.3.1.9 Instrument Serial Number 3-6
3.3.2 Enter Password Screen 3-6
3.3.3 Data Options 3-6
3.3.3.1 FLASH Card Status 3-6
3.3.3.2 FLASH Percent Full 3-7
3.3.3.3 View Data File 3-7
3.3.3.4 Format FLASH Card 3-8
3.3.4 Output Options 3-8
3.3.4.1 FLASH Card 3-9
3.3.4.1.1 Logging Skip Rate 3-10
3.3.4.1.2 FLASH Report Options 3-10
3.3.4.2 GOES Radio Setup 3-11

3.3.4.3 RS232 Printout 3-11
3.3.4.4 Remote Display 3-11
3.3.4.4.1 Define Label 3-12
3.3.4.5 Voice Modem Setups Option 3-12
3.3.4.6 H-413 Relay Setups 3-12
3.3.4.6.1 H-413 Source 3-13
3.3.4.6.2 H-413 Trigger Type 3-13
3.3.4.6.3 H-413 Set Point 3-13
3.3.4.6.4 H-413 Mode 3-13
3.3.4.6.5 H-413 Status 3-14
3.3.4.6.6 H-413 Relay 3-14
3.3.4.6.7 H-413 Relay Pulse Time 3-14
3.3.5 Scan Setups 3-14
3.3.5.1 Turning Scanning On and Off 3-15
3.3.5.2 Scan Rate 3-15
3.3.5.3 Next Update 3-15
3.3.5.4 Next Log Time 3-15
3.3.6 System Options 3-16
3.3.6.1 Time 3-17
3.3.6.2 Date 3-17
3.3.6.3 Site ID (Filename) 3-17
3.3.6.4 SDI-12 Significant Digits 3-18
3.3.6.5 SDI-12 Transparent Mode 3-18
3.3.6.5.1 SDI-12 Test Address Command 3-18
3.3.6.5.2 SDI-12 Send Acknowledge Command 3-18
3.3.6.5.3 SDI-12 Send Identify Command 3-19
3.3.6.5.4 SDI-12 Send Verify Command 3-19
3.3.6.5.5 SDI-12 Send Measure Command 3-19
3.3.6.5.6 SDI-12 Send Data 0 Command 3-19
3.3.6.5.7 SDI-12 Send Extended Command 3-20
3.3.6.5.8 SDI-12 Edit Extended Command 3-20
3.3.6.6 H310 / H350Lt Setup Options 3-20
3.3.6.6.1 SDI-12 Test Address Command (H310) 3-20
3.3.6.6.2 H310 / H350Lt Slope 3-21
3.3.6.6.3 H310 / H350Lt Offset 3-21
3.3.6.7 Handar 436B Setup Options 3-21
3.3.6.7.1 SDI-12 Test Address Command (436B) 3-21
3.3.6.7.2 Handar 436B Slope 3-21
3.3.6.7.3 Handar 436B Offset 3-22
3.3.6.8 Serial Port Setup 3-22
3.3.6.8.1 Change Baud Rate 3-22
3.3.6.8.2 H-232-E Used In System 3-22
3.3.6.9 Set Current Password 3-23
3.3.6.10 Update the Firmware 3-23

Chapter 4 Remote Communications

4.1 Introduction 4-1
4.2 H-500 Main Menu Screen 4-2
4.3 H-500 Status Menu Screen 4-2
4.4 H-500 Logging Menu Screen 4-3
4.5 H-500 FLASH Menu Screen 4-3
4.6 H-500 GOES Radio Menu Screen 4-4
4.7 H-500 System Menu Screen 4-4
4.8 H-500 SDI-12 Transparent Menu Screen 4-5
4.9 H-310 / H-350-Lt Menu Screen 4-5

Chapter 5 GOES Radio

5.1 Introduction to the H-222 5-1
5.2 Configuring the H-222 GOES Radio 5-1
5.2.1 Self Timed Options 5-3
5.2.1.1 Self Timed Channel Number 5-3
5.2.1.2 Self Timed Data Rate 5-3
5.2.1.3 Self Timed Offset Time 5-4
5.2.1.4 Self Timed Skip Rate 5-4
5.2.1.5 Self Timed Window 5-5
5.2.1.6 Self Timed Preamble 5-5
5.2.1.7 Self Timed Data Format 5-5
5.2.1.8 Self Timed Scans Per Transmission 5-6
5.2.1.9 Self Timed Transmission Options 5-6
5.2.1.10 Self Timed Buffer counter 5-7
5.2.2 Random Options 5-7
5.2.2.1 Random Channel Number 5-8
5.2.2.2 Random Data Rate 5-8
5.2.2.3 Random Trigger Source 5-8
5.2.2.4 Random Trigger Mode 5-8
5.2.2.5 Random High Trigger Point 5-9
5.2.2.6 Random Low Trigger Point 5-9
5.2.2.7 Random Transmission Options 5-9
5.2.2.8 Random Buffer Counter 5-10
5.2.2.9 Transmit Random Data 5-10
5.2.3 Change GOES Time 5-10
5.2.4 Data Collection Platform Address 5-10
5.2.5 Select GOES Mode 5-10
5.3 GOES Radio Setup Example 5-11
5.4 GOES Data Format 5-12
5.4.1 GOES Self- Timed SHEF #1 5-12
5.4.2 GOES Self- Timed SHEF #2 5-14
5.4.3 GOES Self- Timed SHEF #3 5-15
5.4.4 Self Timed Binary 5-16
5.4.5 Random Binary 5-17
5.5 GOES Pseudo-Binary Look-up Table 5-18

5.6 Common GOES Terms 5-19
5.7 GOES Power Connections 5-20

Chapter 6 Maintenance/Trouble Shooting

6.1 Maintenance 6-1
6.2 Trouble Shooting 6-1
6.3 Common Questions Regarding the H-500 6-2

Chapter 7 Technical Description

7.1 Interface Connectors 7-1
7.1.1 Connecting the H-500 to Power 7-1
7.1.2 Connecting the H-500 to SDI-12 Sensors 7-1
7.1.3 Connecting the H-500 to RS-232 7-2
7.1.4 Connecting the H-500 to EARTH GROUND 7-2

Appendix A Specifications A-1

Appendix B SDI-12 Command and Response Protocol B-1

B.1 SDI-12 Command and Response Protocol B-1
B.2 Send Acknowledge Command B-2
B.3 Send Identification Command B-2
B.4 Initiate Verify Command B-3
B.5 Measure Command B-3
B.6 Send Data Command B-4
B.7 Extended Commands B-4

User Agreement/ *WATER*LOG® Warranty

1. NATURE OF THE PRODUCT

This agreement accompanies a data logging system comprising micro-coded circuitry and other electronic equipment sealed in an enclosed housing, and packaged together with written instructional materials. The packaged electronic circuitry and instructional materials are herein collectively referred to as the "PRODUCT." The PRODUCT is made available from DESIGN ANALYSIS ASSOCIATES, INC., of 75 West 100 South, Logan, Utah 84321 (hereinafter referred to as "DESIGN ANALYSIS"), and contains information and embodies technology that is confidential and proprietary to DESIGN ANALYSIS, and the availability and use of the PRODUCT is extended to you, the USER, solely on the basis of the terms of agreement which follow.

2. ACKNOWLEDGMENTS BY USER

Opening the package which encloses the accompanying PRODUCT indicates your acceptance of the terms and conditions of this agreement and constitutes an acknowledgment by you of the confidential and proprietary nature of the rights of DESIGN ANALYSIS in the PRODUCT.

3. DUTIES OF YOU, THE USER

In consideration for the access to and use of the PRODUCT extended to you by DESIGN ANALYSIS and to protect the confidential and proprietary information of DESIGN ANALYSIS, USER agrees as follows:

(a) USER agrees that they will not open the sealed housing of the PRODUCT, and that they will take all necessary precautions to prevent their employees, agents, sub-contractors and resellers from doing so.

(b) USER agrees that they will not remove from the exterior of the housing of the PRODUCT any warnings against opening or notices of proprietary interest placed thereon by DESIGN ANALYSIS, and that they will take all necessary precautions to prevent their employees, agents, sub-contractors, and resellers form removing such markings therefrom.

(c) USER agrees to treat the PRODUCT with the same degree of care as USER exercises in relation to their own confidential and proprietary information.

(d) USER agrees to return the PRODUCT to DESIGN ANALYSIS if and when the PRODUCT is deemed to be no longer of use. In return therefore, USER will receive from DESIGN ANALYSIS a redemption fee of $10.00.

4. LICENSE

The PRODUCT is made available under license from DESIGN ANALYSIS. In consideration of payment, USER is hereby granted a limited right under applicable trade secret and copyright rights to use the PRODUCT. THE PAYMENT DOES NOT CONSTITUTE A PURCHASE OF THE PRODUCT, AND THE RIGHT TO USE THE PRODUCT IS NONTRANSFERABLE, EXCEPT TO A PARTY AGREEING TO BEING BOUND BY TERMS CONSISTENT WITH THIS AGREEMENT. THIS MEANS THAT THE USER IS NOT AUTHORIZED TO SELL OR LEASE THE RIGHT TO USE THE PRODUCT OR ANY PORTION THEREOF TO ANY INDIVIDUAL OR COMPANY GAIN, OR OTHERWISE WITHOUT OBTAINING THE AGREEMENT OF SUCH INDIVIDUAL OR COMPANY TO ABIDE BY THE TERMS OF THIS AGREEMENT. ALL RIGHTS NOT SPECIFICALLY GRANTED ABOVE ARE RESERVED BY DESIGN ANALYSIS.

5. TERM

USER may enjoy these rights only as long as their possession of the PRODUCT shall continue to be rightful. These rights will cease if the PRODUCT is returned to DESIGN ANALYSIS under the terms of any redemption offer, warranty, or money-back guarantee, or if USER transfers the PRODUCT to another party on terms inconsistent with this Agreement.

6. LIMITED WARRANTY

(a) What is Covered

DESIGN ANALYSIS warrants that for a period of six months from the time of purchase the functions to be performed by the PRODUCT will be substantially in compliance with USER documentation. DESIGN ANALYSIS also warrants that the PRODUCT will be free from defects in materials and workmanship for a period of ONE YEAR from the date of purchase.

(b) What USER Must Do

If the product fails to satisfy the above warranty, USER must notify DESIGN ANALYSIS in writing within the applicable period specified above and reasonably cooperate with the directions they received from DESIGN ANALYSIS.

(c) What DESIGN ANALYSIS Will Do

DESIGN ANALYSIS will repair the PRODUCT or will endeavor to provide a replacement of same within a reasonable period of time. In the event that DESIGN ANALYSIS is unable to make the necessary repairs or replacement within a reasonable period of time, the original purchase price will be refunded upon the return of the PRODUCT to DESIGN ANALYSIS.

(d) Limitations

(i) THIS LIMITED WARRANTY IS VOIDED WHERE THE SEALED HOUSING OF THE PRODUCT HAS BEEN OPENED.

(ii) THE ENTIRE REMEDY FOR BREACH OF THIS LIMITED WARRANTY SHALL BE LIMITED TO REPLACEMENT OF THE DEFECTIVE PRODUCT OR REFUNDING OF THE PURCHASE PRICE, AS SET FORTH ABOVE. IN NO EVENT WILL THE LIABILITY OF DESIGN ANALYSIS TO USER OR TO ANY OTHER PARTY EXCEED THE ORIGINAL PURCHASE PRICE OF THE PRODUCT, REGARDLESS OF THE FORM OF THE CLAIM.

(iii) EXCEPT FOR THE EXPRESS WARRANTIES ABOVE, DESIGN ANALYSIS SPECIFICALLY DISCLAIMS ALL OTHER WARRANTIES, INCLUDING, WITHOUT LIMITATION, ALL IMPLIED WARRANTIES OF MERCHANTABILITY AND FITNESS FOR A PARTICULAR PURPOSE.

(iv) UNDER NO CIRCUMSTANCES WILL DESIGN ANALYSIS BE LIABLE FOR SPECIAL, INCIDENTAL, CONSEQUENTIAL, INDIRECT, OR ANY OTHER DAMAGES OR CLAIMS ARISING FROM THE USE OF THIS PRODUCT, INCLUDING LOSS OF PROFITS OR ANY OTHER COMMERCIAL DAMAGES, EVEN IF ADVISED OF THE POSSIBILITY OF SUCH DAMAGES. IN NO EVENT WILL DESIGN ANALYSIS BE LIABLE FOR ANY CLAIMS, LIABILITY, OR DAMAGES ARISING FROM MODIFICATION MADE THEREIN, OTHER THAN BY DESIGN ANALYSIS.

(v) Should the exclusive remedy stated in subparagraph 6 (d) (ii) above be determined by a proper court of law to have failed of its essential purpose, the limitation of the obligations of DESIGN ANALYSIS stated in subparagraphs 6 (d) (iii) and (iv) shall remain valid.

(vi) THIS LIMITED WARRANTY GIVES USER SPECIFIC LEGAL RIGHTS. USER MAY ALSO HAVE OTHER RIGHTS WHICH VARY FROM STATE TO STATE. SOME STATES DO NOT ALLOW LIMITATIONS ON HOW LONG AN IMPLIED WARRANTY LASTS OR THE EXCLUSION OF INCIDENTAL OR CONSEQUENTIAL DAMAGES, SO THOSE LIMITATIONS OR EXCLUSIONS MAY NOT APPLY.

7. BINDING AGREEMENT

This is a binding agreement, and if not understood, USER should seek competent legal advice. By paying for the PRODUCT and opening the package, USER acknowledges to have read this Agreement and have agreed to be bound by its terms and conditions.

8. COMPLETE AGREEMENT

This agreement is the complete and exclusive statement of the agreement between USER and DESIGN ANALYSIS and supersedes all proposals for prior agreements and understandings, whether oral or written, and all other communications relating to the subject matter of this agreement.

9. GOVERNING LAW

This Agreement and its validity and interpretation shall be governed by the laws of the State of Utah, notwithstanding any choice of law rules of Utah or any other state or jurisdiction.

10. U.S. GOVERNMENT RESTRICTED RIGHTS

Use, duplication, or disclosure by the United States Government is subject to restrictions set forth in paragraph (c) (1) (ii) of the rights in Technical Data and Computer Software clause at 52.227-7013. The Contractor-manufacturer is DESIGN ANALYSIS ASSOCIATES, INC., 75 West 100 South, Logan, Utah 84321.

Preface:
A Message to the H-500 User

PLEASE! PLEASE! PLEASE!
READ THIS MANUAL BEFORE YOU ATTEMPT TO USE YOUR H-500!!

Welcome to a new world data logging. Your new *WATER*LOG® H-500 is the end product of many years of research and product development. The H-500 is a precision laboratory quality instrument that has been painstakingly developed to suffer the rigors of field use. It has been designed using state-of-the-art, tried and tested design methods and techniques. Further, only high quality parts have been used in its make up.

Your H-500 has gone through many hours of wide temperature swings, and burn-in. Then, it has been recertified prior to shipment.

Your H-500 is suitable for many applications, laboratory or field. The H-500 will collect data from any SDI-12 sensor. Also, it can communicate with a host system for data retrieval and setup.

WARNING!
As mentioned above, your H-500 is a precision instrument. It must be handled and cared for with this in mind. True, it has been ruggedized for field use, but it should not be dropped or tossed. The following Do's and Don'ts Guidelines will help you avoid unnecessary problems and keep your H-500 giving you good performance for years to come.

DO'S AND DON'TS GUIDELINES

Don't expose my insides. This voids my warranty (don't remove my front panel).
Don't install me in direct sunlight.
Don't drop me.
Don't toss me.
Don't over pressure me.
Don't leave my lid open. This lets the bugs, dust and moisture move in.
Do use a backup wrench when tightening any fittings. **(This is a must!)**
Do mount me on your gauge house wall. Mounting vertically will help prevent moisture problems.
Do keep my insides dry.
Do call the factory if you have any questions about me.

Chapter 1
Introduction

1.1 Uses, Functions, Features and Attributes of the H-500

- Provides a bright, easy-to-read display with built-in power saving automatic shut-off.
- Built in key board provides a user interface that is easy to use and does not require an external programming device (i.e. a laptop computer).
- Remote setup also provided using standard communication software.
- Designed to be compatible with all SDI-12 sensors.
- Operates over a wide temperature range:
- Designed with a built-in data logger function which stores the data on an industry standard PCMCIA FLASH Memory Card (removable and non-volatile) using the Microsoft Flash File System II data format.
- Packaged in a sealed NEMA 4 enclosure.
- Quick connect for "Sidekick" sensor interface modules.

1.2 About This Manual

This manual will show you how to install and operate the H-500. You will find that the installation procedures and operational functions are simple and easy to use. Each chapter is in a logical order to help you through the process of using the H-500 in your application.

Chapter 1: An introduction to the H-500, its serves as a getting acquainted section.

Chapter 2: Deals with the installation of the H-500.

Chapter 3: An in-depth look at the user interface using the built in keyboard and display.

Chapter 4: A brief discussion on the remote communications interface.

Chapter 5: An in-depth look at the GOES radio setup and operation.

Chapter 6: Deals with some basic maintenance and troubleshooting principals.

Chapter 7: Gives a brief technical description of the user accessible connections.

Appendix A: Specifications

Appendix B: SDI-12 Command summary

Symbols used throughout this manual for bringing your attention to specific subjects are shown below.

! Statements that follow this symbol are cautions, or recommendations.

!! Statements that follow this symbol are strong warnings, please follow these warnings.

1.3 Unpacking the H-500

Here are the items you should have received:

1. The H-500 instrument.

2. This Owner's Manual.

3. Wall mounting hardware for the H-500:

   (4) 10-32 screws
   (4) plastic mounting tabs

4. An RS-232 communication cable.

5. (Optional) One Megabyte PCMCIA FLASH memory card.

1.4 Introduction to the H-500

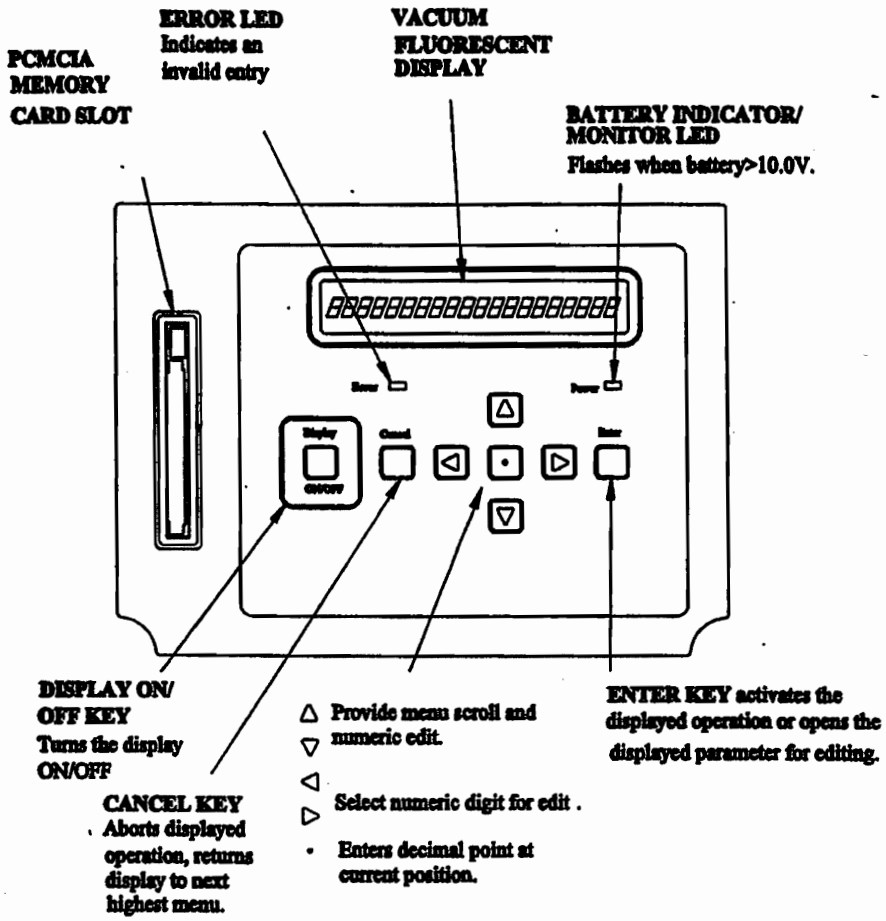

Figure 1-1. The H-500 Front Panel

Figure 1-1 shows the front panel of the H-500 with the lid opened. This is a good time to become acquainted with the H-500's front panel and its features. (Chapter 3, Operation, explains in detail how to use these features.)

1. The Display allows you to view the current setup options, view logged data, and other information about the H-500.

2. The Display On/Off button lets you turn the display on and off. The Display will automatically turn off in five minutes if no keyboard activity is sensed. This feature is designed to save power.

3. The Power light flashes to show that the H-500 is receiving proper +12V power. If the power source has failed or provides less than +10V, the Power light stops flashing. This is a visual indication that the system battery is low.

4. The Error light tells you that the information just entered into the menu field you are editing has not been accepted.

5. The memory card slot accepts an industry standard 1MB (mega byte)PCMCIA FLASH memory card. The H-500 stores the data from the SDI-12 sensors on the FLASH Card. You can then transfer the data from the FLASH card onto your computer with a PCMCIA card reader that supports the Flash File system 2 format. These readers are built into most laptop computers and can be purchased at a computer store or from Design Analysis Associates, Inc for desktop computers.

6. The Enter button has four functions:

   I. Menus with a "< >" field indicate there are sub-menus accessible for the indicated subject. You can activate these sub-menus by pressing the ENTER key.

   II. The Enter button enables you to open fields that can be modified or changed. These menus have brackets "[ ]" in them. For example, the menu screen "TIME [01:23:45] " allows the user to change the values inside the brackets.

   III. The Enter key is used to accept edits or changes. For instance, if you are changing the time, then pressing the ENTER key will accept the change.

   IV. The Enter key is used to answer YES to option screens that are looking for a YES or NO responce. An example is the message"Format FLASH Card?". Press the Enter key for YES or the cancel key for NO.

7. The Cancel button has two functions:

   I. The Cancel button works the same as the Escape key does on your computer. For example: you are editing a parameter and you decide not to make a change; you can press the "Cancel" key to abandon your edits.

   II. The Cancel button also works as a home key. Meaning, if you are in a sub-menu and wish to return to the upper menu, press the cancel key. This also works if you wish to return to the top menu, "<System Status >".

8. The four Direction Arrow buttons (◄ ► ▲ ▼) have four functions:

   I. The ▲ and ▼ keys enable you to scroll from one menu to another. When you reach the bottom screen, the ▼ key will no longer work. When you are at the top screen, the ▲ key no longer works.

II. The ▲ and ▼ keys enable you to scroll through the options within a menu. For example, you want to change the H-500 output option from "FLASH Card: [Off] " to "FLASH Card: [On]." You use the ▲ and ▼ keys to make your selection.

III. When Editing numerical or character parameters, the ▲ and ▼ keys also let you increase or decrease the flashing digit or letter by one. They also toggle the "+" and "-" signs.

IV. The ◄ and ► arrow keys let you move the cursor back and forth across the screen when you are editing a numerical menu such as a trigger set point. The digit or blank space will flash to let you know where the cursor is.

9. The center button is the decimal key. With it you can change the position of the decimal point. The decimal point is moved by placing the flashing cursor using the ◄ and ► keys to the new location and pressing the decimal key.

Chapter 2
Installation

2.1 Installing the H-500

This chapter helps you to install and connect your H-500. For proper installation, you will need:

- The H-500 with mounting hardware.
- This Owner's Manual.
- Communication cable.
- Screw driver for mounting the H-500 to a wall or other surface.
- Screw driver for connecting wires to the terminal connectors.
- All SDI-12 sensors to be used in this application.
- All manuals for the SDI-12 sensors.
- 18 Gauge wire for power.
- Power source (Battery, Solar panels, AC adaptor, etc).
- Grounding rod, and heavy copper wire for connecting the system to the grounding rod.

The following is a basic outline of the installation process. Your installation may vary somewhat according to your intended application, and site conditions.

1. Decide the best place to mount the equipment. Wiring should be kept as short as possible. Equipment with displays and keyboards should be easily accessible. Equipment with exposed wiring terminals should be mounted with the terminals on the bottom of the case. Also keep in mind future expansion, function of the equipment, vandalism, etc.

2. Physically mount all the equipment in the desired locations.

3. Connect the sensors to the H-500, Sidekick sensors may be directly connected to the circular connectors. Other SDI-12 sensors may be connected to the terminal strip.

4. Connect a power source to the H-500.

5. Connect any communication devices to the H-500.

6. Provide an earth ground for the site and connect the H-500 to this using the provided connection.

Figure 2-1 illustrates the physical input/output features on your H-500 and briefly describes their purposes. This diagram will help in determining where you should make your connections.

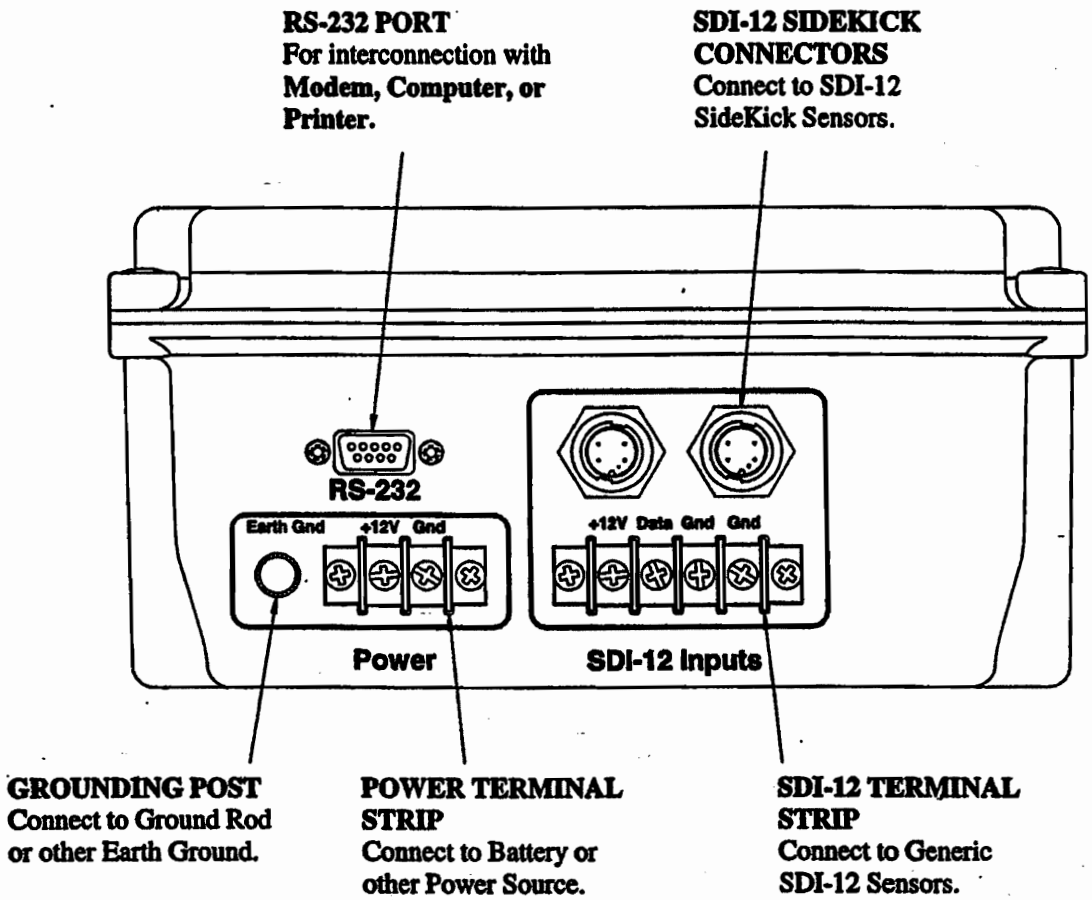

Figure 2-1. The H-500 Connector Panel

! When connecting wires to the terminal strip it is best to use crimp terminal connectors and not bare wires. This will provide a better long lasting connection.

!! It is vary important that an earth ground be provided and connected to the grounding post on the H-500. Other equipment that the manufacture recommends should be grounded should also be connected to this same earth ground.

2.2 Testing the Installation

After hooking up your battery, the Power light should begin flashing every 5 to 10 seconds. This indicates that your battery is providing 10 volts or greater. Press the display button. The display should come on, indicating the instrument is functional and ready to use.

You will find the detailed user setup information in Chapter 3. The "SDI-12 Transparent Mode" also discussed in Chapter 3 will allow an easy method for testing the different sensors connected to the H-500.

Chapter 3
Operation

3.1 Overview

The H-500 is easy to set up and operate. The display and keyboard allow you to examine and edit the H-500's configuration. There is no need for an external programming device such as a laptop or notebook computer. This is a key feature. However for applications that require remote access, the H-500 can be setup and programmed with a PC directly connected to the H-500 serial port or through a modem, see chapter 4 for details.

3.2 Configuring the H-500

3.2.1 Keyboard/Display Basics

The keyboard and display allow you to view and edit the H-500's configuration.

To activate the display, press the On/Off button.

The following screen will be displayed for a moment every time the unit is turned on.

```
H-500 SDI-12 Logger
```

Use ▲ and ▼ Keys to move up and down through the screens.

As you experiment, you will find the several screens used to set up and configure the H-500.

When you reach the last screen, the down arrow key ▼ will no longer work. At any point, you can press the "Cancel" key to return back to the top screen.

Use the 'Enter' or 'Right' keys to enter submenus.
Use the 'Cancel' key to exit submenus.

Screens with a "->" field indicate there are submenus accessible for the indicated subject. You can open up the submenu for these screens by pressing the "Enter" key, or "Right Arrow" key. The display will change to show the first entry of the requested submenu. Just as with the main menu, use the up arrow and down arrow keys to scroll between these submenu parameters.

The 'Cancel' button always returns to the top screen of the main menu.

Pressing the Cancel button once will back up one level in the menu structure. Pressing the Cancel button several times will always exit any editing operation, and sub menus and return the system to the top screen of the main menu.

NOTE: In some sub menus the system will treat the 'On/Off' key the same as the Cancel key. Once the system has returned to the top screen of the main menu the On/Off key will turn the system off. If no key entry is made for five minutes, the display will automatically turn itself off to conserve power.

3.2.2 Using the Parameter Editor

Screens with a "[ ]" field show the current value of an operational parameter. You can edit any screen with a "[ ]" field by pressing the "Enter" key and using the up arrow or down arrow to select the desired number, character, or parameter.

To edit the displayed parameter, press the Enter key.

The display will begin flashing a character or the whole selection between the brackets. To move the cursor to the desired location, use the left arrow ◂ and right arrow ▸ keys. Then you can edit the item being flashed with the up arrow ▴ and down arrow ▾ keys.

If you make a mistake or wish to abandon the edit operation, press the "Cancel" button.

The display will stop flashing and the previous value will be restored.

When you are satisfied with the edited value, press the Enter button to program the H-500 with your new parameter value.

The parameter information is stored internally in non-volatile memory. Even if the power is removed, your new parameter will be saved.

Two types of parameters can appear in the "[ ]" fields: numeric and alpha or character.

The things you need to know about **numeric fields** are:

1. You can edit numeric parameters using the up and down keys to change the digits. Use the left and right keys to scroll between digits.

2. Pressing the "." key will cause the decimal point to move to the cursor position. The digits will shift to accommodate the new decimal point.

3. You can toggle the "+" or "-" positions with the up and down keys. If the red error light on the panel illuminates when entering a new value, the edited entry contains an error.

You must either fix the error and press the "Enter" key again or press the "Cancel" key to abandon the edit.

3.3 Editing H-500 Parameters

The following paragraphs explain each of the H-500's screens and also how to edit configurable or editable parameters. The following shows the top level, or main menu options.

System Status ->
Enter Password[XXXX]
Data Options ->
Output Options ->
Scan Setups ->
System Setups ->

3.3.1 System Status

These submenu items are used only for viewing system status and data. No changes can be made in these submenus. These options are always available even if the password option is set.

System Status ->	Battery V = +XX.X
	Min Battery = +XX.X
	Max Battery = +XX.X
	System Resets = XX
	Status = System OK
	Reset Stat Screens?
	Firmware Rev = V1.0
	Checksum Test = PASS
	Instr. S#: S#XXXXXX

3.3.1.1 Battery Voltage

This screen displays the current voltage on the H-500's +12V input.

<System Status >	Battery V = +XX.X

Note: The display draws more than 300mA, which will pull extra current from the battery and may cause the reading to be lower compared to when the unit is turned off.

3.3.1.2 Minimum Battery Voltage

This screen displays the minimum battery voltage detected since the last time that the battery had been read. This will help in trouble shooting to determine if a low battery voltage was detected or that data may have gone unrecorded.

System Status ->	Min Battery = +11.2

3.3.1.3 Maximum Battery Voltage

This screen will help in determining voltage spikes that may not be detected in regular logging intervals. It works like the minimum battery voltage feature, except it will determine maximum voltage detected. This may help in evaluating the performance of a charging system.

System Status ->	Max Battery = +12.5

3.3.1.4 System Resets

System resets tells users how many times the H-510 has lost the main 12 volt power and then had it restored. This will help in trouble shooting the H-510 system if it is determined that power is intermittent.

System Status ->	System Resets = xx

3.3.1.5 Status

"Status" This screen shows any special conditions encountered that should be reported to the user. When a condition happens, often the user is notified right then, for example if the user tries to start logging to a FLASH card and forgets to install the card, the unit will warn them immediately.

"STATUS = Success"	The unit is operationally OK.
"STATUS = CSUM Failed"	The checksum failed.
"STATUS = COP Timeout"	The Chip Operating Properly timer timed out causing a system reset.
"STATUS = VPP Error"	The Vpp power supply is used to write data to the FLASH card. This message will be displayed if the power supply was not at a proper level.

"STATUS = Write Error"	The Write Data operation to the FLASH card had a fault.
"STATUS = Erase Error"	The Erase FLASH Card operation had a fault.
"STATUS = No Card"	The H-500 tried to log to the FLASH card but could not find one in the slot. This will be displayed if the user pulls the card out without stopping the logging process and the unit tries to log data to the card.
"STATUS = New Card"	This will be displayed if the user changes cards without stopping the logging process. The H-500 recognizes the new card and tries to continue logging if it can.
"STATUS = Wrt Prt Err"	The H-500 tried to log data to the FLASH card, but the write protect switch was turned on.
"STATUS = Open File Err"	The H-500 could not open a new file on the FLASH card.
"STATUS = Unknown"	This message will be displayed if the system has NOT performed a function that reports its status. No error conditions exist.

<System Status >	Status = XXXXXXXXXX

3.3.1.6 Reset Stat Screens?

Pressing the 'ENTER' key causes the **Min Battery, Max Battery,** and the **System Resets** to be cleared. The best time to reset the **Stat Screens** is just before leaving the site after a visit. This will help upon your next visit if there has been a problem. You can use this as a tool for trouble shooting on the next visit, as the reported values will have occurred between the two visits.

System Status ->	Reset Stat Screens?

3.3.1.7 Firmware Revision

This shows the revision of the firmware running in your H-500.

<System Status >	Firmware Rev = VX.X

3.3.1.8 Checksum Test

The H-500 performs a checksum test on the firmware and displays a Pass/Fail response. If the checksum fails, something has corrupted the firmware. In this case, you may need to download the firmware from a FLASH Memory Card. Consult the factory to do this.

<System Status >	Checksum Test = XXXX

3.3.1.9 Instrument Serial Number

This shows the instrument serial number. You may be asked to provide a serial number if you ever call in for technical assistance.

<System Status >	Instr. S#: S#XXXXXX

3.3.2 Enter Password Screen

This screen is displayed only IF the system password has been changed from the default password of 'PASS'. At this point the user must enter in the new password in order to see the remaining screens. An option screen under the 'System Diagnostics" menu allows the password to be changed. Make sure the new password is remembered or you will be locked out of the main system options. See the 'Set Password' option for more information.

Enter Password[XXXX]

3.3.3 Data Options

This submenu displays the status of the FLASH Memory Card, allows the user to view data on the card and to format the card.

Data Options ->	FLASH CARD OK
	FLASH % Full = XX
	View Data File?
	Format FLASH Card?

3.3.3.1 FLASH Card Status

The first screen of this submenu is a status of the FLASH Memory Card. The status messages are as follows:

"Linear FLASH Card OK"	A quick check of the card indicates it is OK, and that it a linear type of card.
"ATA FLASH Card OK"	A quick check of the card indicates it is OK, and that it an ATA type of card.
"FLASH CARD MISSING"	The FLASH card is not installed in the card slot.

"CARD IS WR PROTECTED"	The card has its write protect switch turned on. This switch must be turned off when used with the H-500. It can be turned on after the card has been removed from the H-500.
"WRONG TYPE OF CARD"	The card type is not compatible with the H-500. The card type must use the INTEL format, and be a 1 or a 4 megabyte card.
"CARD NOT FORMATTED"	The card is not formatted. This should only be displayed on new cards.

Data Options ->	Linear FLASH Card Ok

3.3.3.2 FLASH Percent Full

This screen displays, as a percentage, the amount of space used in the Linear FLASH cards, and as free bytes on the ATA FLASH cards.

Data Options ->	FLASH % Full =XX	(Linear FLASH Cards)
Data Options ->	Bytes Free=xxxxxxxx	(ATA FLASH Cards)

3.3.3.3 View Data File

This option allows the user to view data in the last data file on the FLASH card. When the ENTER key is pressed, the unit will scan the card looking for the data last logged to the card and then display it. Since the line of data is normally longer than the display, the RIGHT and LEFT arrow keys are used to view the entire line of data. The UP and DOWN arrow keys are used to move up and down in the data file. In this mode, holding down the UP or DOWN arrow key will cause the key to repeat. The repeat action will be slow for the first 10 lines of data and then will change to a fast repeat mode. The internal file system uses blocks of memory for data storage. When moving up in the data file and one of these block boundaries is crossed, there will be a delay for a couple of seconds for the new data to be found.

NOTE: The 'View Data' option at this point only works with the linear FLASH cards.

Data Options ->	View Data File?

3.3.3.4 Format FLASH Card

This option allows the user to format a FLASH card. This will be used on new cards and on previously used cards where the data has been copied to another system or is no longer wanted. This option will erase the entire card making it available for new data. This option cannot be used while the "Logging" option is on. The message "Not While Logging !" will be displayed if the user tries to format a card while logging. Before the card is reformatted the H-500 will remind you that any data on the card will be lost, giving you one last chance to abort the process.

On linear FLASH cards the format process will take a couple of minutes and some status messages will be displayed such as "Filling With Zeros" and "Erasing". The process lasts only a couple of seconds for the ATA FLASH cards.

Data Options ->	Format FLASH Card?

3.3.4 Output Options

This submenu displays options for controlling where data will be sent.

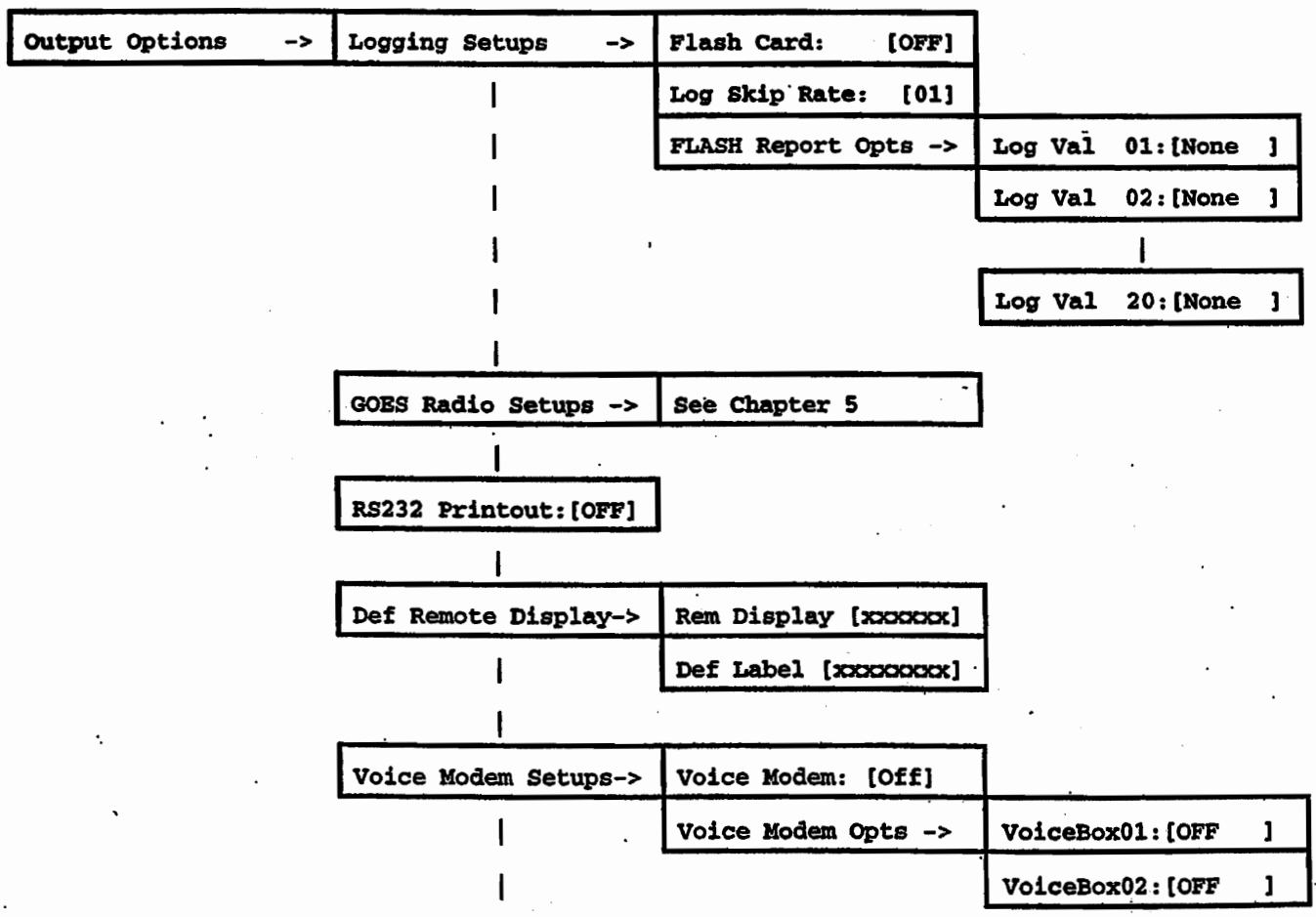

	VoiceBos10:[OFF]
H413 Relay Setups ->	H413 Source:[Off]
	H413 Trig:[Always]
	Set Pt:[+0.0000]
	H413 Mode: [Pulse]
	H413 Status: [Off]
	Pulse H413 Relay?
	Pulse Time [00000]

3.3.4.1 FLASH Card

!! IMPORTANT NOTE: The proper method for changing FLASH cards is to turn logging off, remove the card and insert a new card. Then start the H-500 logging again. This allows the H-500 to properly close the data file on the FLASH card. Pulling the card out while logging is enabled could result in the loss of the data on the card since the H-500 may be trying to write to the card. Another error could occur in the form of a card file format error. If you attempt to turn the H-500 display on and it does not respond, the H-500 is taking a measurement. Wait a few seconds and try again. A measurement may last several seconds depending on the sensors connected. If the card is accidently removed while logging is on it may be possible to prevent data loss by reinstalling the card and turn logging off.

When the FLASH Card is enabled, then when logging is started the H-500 will open a data file on the card using the site ID as defined in the System Setup Options, and append an extension of XXX. The XXX will be some number indicating the total number of files on the card. The first file opened is 000 and the subsequent files that are open will have an extension that has been incremented by one. This file will remain open until logging is turned off. Data will be written to this file at the specified "Interval."

! The "FLASH Card" option must be turned on to log data to the card. If the desire is to log data to the card then it is a good practice before leaving a site to make sure the card is enabled and logging is turned on.

Output Options: ->	Logging Setups ->	FLASH Card: [Off]

3.3.4.1.1 Logging Skip Rate

This screen displays the current Logging Skip rate. The Logging Skip Rate can be set in the range of 1 to 99. This option allows the user to log data to the FLASH card at a slower rate than the Scan Rate. The default Skip Rate is 1 which means to log data to the FLASH card every time the H-500 retrieves data from the sensors. If the Log Skip Rate is set to 5 then only the 5th time the H-500 retrieved data from the sensors would the data also be stored in the FLASH card. This option allows the H-500 to send data to other sections of the H-500 at a higher rate than what it is going to the FLASH card. An example would be to update a remote display at once a minute, and log data to the FLASH card twice an hour. The Scan rate would have to be set to scan the sensors every minute in order to update the remote display that often. However the Log Skip Rate would be set to 30 so that only the 30th scan would be stored to the FLASH card.

Output Options ->	<Logging Setups ->	Log Skip Rate: [01]

3.3.4.1.2 FLASH Report Options

The submenus to this screen allow the user to select what is to be recorded on the FLASH card, and in what order. This is like defining the columns in a spread sheet. "Log Value 01" is the first column. "Log Value 02" is the second column and so on. The data stored is selected by pressing the ENTER key allowing the parameter to be edited, then using the UP and DOWN arrow keys to select the desired data source. Press the ENTER key one more time to accept the new value.

Output Options ->	Logging Setups ->	Log Val 01:[None]
		Log Val 02:[None]
		|
		Log Val 20:[None]

For example, assume the following log values have been entered.

Log Value 01: [Date]
Log Value 02: [Time]
Log Value 03: [Batt]
Log Value 04: [SDI-01] (This could be a rain gauge)

Below is shown a sample data file for the above settings.

Date	Time	Batt	SDI-01
01/13	14:20	12.32	0.00
01/13	14:25	12.30	0.01
01/13	14:30	12.24	0.04
01/13	14:35	12.34	0.08

3.3.4.2 GOES Radio Setup

When the H-500 is connected to an H-222 GOES radio system, this menu will allow you to change the configuration in the H-222 from the H-500 keypad. The operation of the GOES radio is explained in chapter 5.

Output Options ->	GOES Radio Setups ->

3.3.4.3 RS232 Printout

This enables/disables a feature which writes out an ASCII string to the 9-pin serial port each time the H-500 makes a measurement. The ASCII string contains the same data that is to be logged to the FLASH card. It can be used by a serial printer or any other device which reads standard RS-232. There is no handshaking, and the data may exceed a single line. (See Figure 4-3 for a pin out diagram for the 9-pin serial connector.) The protocol is RS-232, 9600 Baud, no parity, 8 data bits and 1 stop bit.

Output Options ->	RS232 Printout:[Off]

An example of how the ASCII data string could be formatted is shown below:

```
08/16/97 12:00:00 +12.3 +23.5<CR><LF>
```

Notice the carriage return and line feed characters sent at the end of each line of data.

3.3.4.4 Remote Display

This option enables the H-500 to operate with a remote display unit, and tells the H-500 what data to send to the display. If the display is enabled, then the top line of the display will always be the time and date of the last measurement, and the bottom line will be the selected data.

Output Options ->	Def Remote Display	Rem Display [NONE]

3.3.4.4.1 Define Label

This option is used to define a label that will precede the data to the remote display. This gives the user a way of indicating what is being displayed.

Output Options ->	Def Remote Display	Def Label [XXXXXXXX]

The following box shows what the remote display would look like if the label was defined as "BATT = ", and the H-500 sent the battery voltage to the display. The top line would show the time and date the reading was taken.

```
12/20/96 12:30:00
BATT = +12.23
```

3.3.4.5 Voice Modem Setups Option

The **Voice Modem** option is for setting up the H-500 to work with the H-219VM low power voice modem manufactured by Design Analysis Associates, Inc. Using the H-219VM you are able to do remote setup and data collection. You are also able to receive data by voice, i.e "the stage is 12.345" and "the battery voltage is 12.78." To enable this option simply change **Voice Modem:** from **[Off]** to **[On]**. With this option enabled you will now need to configure the **Voice Box01** through **Voice Box10** to be able to call the H-500 and get voice data over the telephone. These voice boxes act as a mail box for data. Meaning, every time the H-500 scans for data the **Voice Box** is updated with the latest scanned value.

Here is an example, you may want **Voice Box01** to be **[Stage]**, and **Voice Box02** to be **[Batt]**, and **Voice Box03** to be **[SDI01]** which could be rainfall. The order of the **Voice Box** data is completely up to you. When you call the H-500 to check the current conditions, you will be prompted by the voice modem to press the number keys of the phone keypad for the specific **Voice Box** you want to listen to.

Output Options ->	Voice Modem Setups->	Voice Modem: [OFF]	
		Voice Modem Opts ->	VoiceBox01:[OFF]
			VoiceBox02:[OFF]
			VoiceBox10:[OFF]

3.3.4.6 H-413 Relay Setups

The H413 is a 'Sidekick' module that has a built in relay. When used with the H500 it can be used to conditionally activate other equipment like bells, alarms, Samplers, or other equipment that requires a basic switch closure.

NOTE: When used with the H500 the SDI-12 address of the H413 must be set to 'R'. Refer to the H-413 Manual on how to change or verify this is set to 'R'.

3.3.4.6.1 H-413 Source

This option is used to define the data source to use to compare with the 'Set Point' to see if the relay should be activated. For example, to sound a horn if the battery voltage goes too low, the battery must be selected as the source.

If the selected source is 'OFF' then the relay will never be activated.

Output Options ->	H413 Relay Setups ->	H413 Source:[Off]

3.3.4.6.2 H-413 Trigger Type

This option is used to decide when the relay will be activated based on the set point and source value.

Output Options ->	H413 Relay Setups ->	H413 Trig:[Always]

Always: Activate the relay on every scan, regardless of the values of the set point and the source.

> Set Pt: Activate the relay only when the source value is greater than the set point value.

< Set Pt: Activate the relay only when the source value is less than the set point value.

3.3.4.6.3 H-413 Set Point

The set point is used when the relay is to be activated conditionally. The set point may be changed using the standard editing procedures.

Output Options ->	H413 Relay Setups ->	Set Pt:[+0.0000]

3.3.4.6.4 H-413 Mode

When the H500 determines the H413 relay is to be activated it will use this option to see if the relay should be pulsed or turned on continuously.

Output Options ->	H413 Relay Setups ->	H413 Mode: [Pulse]

Pulse: If the condition has been met then the relay is pulsed, (turned on and off automatically). The ON time is determined by the 'Pulse Duration' option.

Cont.: If the condition has been met then the relay is turned on. It will stay on until the next scan that does not meet the trigger conditions. Remember that when the relay is on it will require higher power than when it is off. Also note that if the device it is turning on requires high power, that the power source must last as long as the relay may be on.

3.3.4.6.5 H-413 Status

This screen displays the current state of the relay, wether it is on or off. This screen also allows the user to change the state of the relay for testing reasons.

Output Options ->	H413 Relay Setups ->	H413 Status: [Off]

3.3.4.6.6 Pulse H-413 Relay

Pressing the ENTER key will cause the relay to pulse one time. This may be used for testing purposes. The length of the pulse is set by the 'Pulse Time' option.

Output Options ->	H413 Relay Setups ->	Pulse H413 Relay?

3.3.4.6.7 Relay Pulse Time

This option is used to set the duration of the relay pulse. It may be from 25 milliseconds to 65 seconds. The pulse duration is dependant on the application, but keep in mind it should be less than the scan rate.

NOTE: If the relay is servicing one pulse command and another pulse command is sent to the relay, then the relay stay on the and the pulse time will reset possibly causing the relay to stay on continuously.

Output Options ->	H413 Relay Setups ->	Pulse Time [01000]

3.3.5 Scan Setups

This submenu displays options for controlling the scan functions of the H-500.

Scan Setups ->	Scanning: [Off]
	Scan Rate [HH:MM:SS]
	Next Scan = HH:MM:SS
	Next Scn At[12:00:00]

3.3.5.1 Turning Scanning On and Off

This screen shows if the unit is scanning or not, and allows it to be changed. Scanning is the heart of the system. Turning it off will stop all other operations the unit is doing including logging, Sending GOES data and all other operations. Be sure that when leaving the site that this option is on.

Scan Options ->	Scanning: [Off]

3.3.5.2 Scan Rate

This screen displays the current scan rate. The scan rate can be set in the range of 1 second to 24 hours. Fast scan rates like one second will normally be unrealistic and will depend on how many and what type of sensors are connected to the H-500.

Scan Options ->	Scan Rate:[HH:MM:SS]

3.3.5.3 Next Update

This screen displays the amount of time to the next log. It will count down from the current logging interval to 00:00:00. When the H-500 has logging turned off, this screen will not be displayed.

Scan Options ->	Next Update=HH:MM:SS

3.3.5.4 Next Log Time

This screen shows the time that the next measurement process will take place. When scanning is turned on, the H-500 calculates the best time to start scanning based on the scan interval, the logging skip rate, the GOES skip rate, and the current time. This process tries to keep the logged data or data going to the GOES radio synchronized to some logical time interval like on the hour, or at even 15 minute intervals.

An example would be to have the unit set to scan every 5 minutes, and the logging skip rate was set to 6, (log every 30 minutes); and the GOES skip rate set to 3 (update the GOES radio every 15 minutes). If the current time was 12:07:22, when logging was starting the next measurements will be at 12:10:00, 12:15:00, 12:20:00 etc, data would be logged to the FLASH card at 12:30:00 13:00:00 13:30:00 etc, data would be sent to the GOES radio at 12:15:00, 12:30:00, 12:45:00, etc.

Once scanning is started the user can change this value to force the unit to scan the next value at some other time in the future. This could have undesirable side affects, mainly causing the unit to log data at abnormal times, or send data to the GOES radio at abnormal times. When this value is changed the system resets some internal counters that are used in conjunction with the skip rate variables. For example if the logging skip rate is set to 6, then when the Next Log value is changed an internal log rate counter is reset to 6. Now it will wait for six measurements before data will be logged to the FLASH card. The same applies to the GOES skip option.

Scan Setups ->	Next Log [HH:MM:SS]

3.3.6 System Options

This submenu contains some self-diagnostic tests which the H-500 can perform, and provides system information. It also has features for updating the system firmware from a FLASH Memory Card.

System Setups ->	Time	
	Date	
	Site ID: [Site-ID]	
	SDI-12 Digits: [2]	
	<SDI Transparent>	SDI-12 Test Adrs:[0]
		Snd Acknowledge Cmd?
		Send Identify Cmd?
		Send Verify Cmd?
		Send Measure Cmd?
		Send Data 0 Cmd?
		Send Extended Cmd?
		Xcmd[XXXXXXXXXXXXXX]
	<H310/H350Lt Setup >	SDI-12 Test Adrs:[0]
		Slope: [ ]
		Offset:[ ]
	<Handar 436B Setup >	SDI-12 Test Adrs:[0]
		436 Slope: [+00.00]
		436 Ofst:[+000.00]

<Serial Port Setup>	Baud Rate [XXXX]
	H232E In Use: [XXX]

Set Password:[XXXX]
Update the Firmware?

3.3.6.1 Time

This screen displays the current time and is used to update the time if it needs adjustments. The display will be updated each second to allow easy viewing of the current time.

<Logging Parameters>	Time [HH:MM:SS]

3.3.6.2 Date

This screen displays the current date and is used to update the date if it needs adjustments.

<Logging Parameters>	Date [MM/DD/YY]

3.3.6.3 Site ID (Filename)

This option is used to define the name of the site, and is used as the filename for the data stored on the FLASH card. The file name must not contain any imbedded blanks, or punctuation characters, and must be "left justified." The file extension will be added automatically when the file is created. The extension is a number starting at 000, and will increment up each time logging is started allowing several files to exist on the FLASH card with the same file name but with different extensions. The default file name is "Site-ID ".

File name examples:

SMITHFLD	Ok, complete filename would be SMITHFLD.000
FARMROAD	Ok, complete filename would be FARMROAD.000
RIVER.45	ERROR, the H-500 will add an extension automatically to the filename resulting in a filename of RIVER.45.000. Now the filename looks like it has two extensions.

! The filename must fit the DOS file name format.

3.3.6.4 SDI-12 Significant Digits

This screen is used to indicate how many digits to the right of the decimal point should be used. This will affect all the SDI-12 values saved to the flash card.

<System Options>	SDI-12 Digits: XX

3.3.6.5 SDI-12 Transparent Mode

The following screens allow user interaction with an SDI-12 sensor connected to the H-500. This is commonly known as an SDI-12 transparent mode of operation. This is the main menu screen allowing access to the SDI-12 transparent mode options.

<System Options>	<SDI Transparent>	SDI-12 Test Adrs:[0]
		Snd Acknowledge Cmd?
		Send Identify Cmd?
		Send Verify Cmd?
		Send Measure Cmd?
		Send Data 0 Cmd?
		Send Extended Cmd?
		Xcmd[XXXXXXXXXXXXXX]

3.3.6.5.1 SDI-12 Test Address Command

This option sets the address of the sensor which the H-500 will communicate with when a command is sent from the H-500 in the SDI-12 transparent mode. If several sensors are connected to the H-500, then only the one that matches this address will respond to commands from the H-500 in the SDI-12 transparent mode.

<System Options>	<SDI Transparent>	SDI-12 Test Adrs:[0]

! When using the SDI-12 transparent mode to change the address of a sensor, make sure that the new address is not used by other sensors connected to the H-500.

3.3.6.5.2 SDI-12 Send Acknowledge Command

Pressing the ENTER key will cause the SDI-12 Acknowledge command to be sent using the address defined above. The results will be displayed on the screen. If there were any errors a time out message will be displayed. See Appendix B for an example.

<System Options>	<SDI Transparent>	Snd Acknowledge Cmd?

3.3.6.5.3 SDI-12 Send Identify Command

Pressing the ENTER key will cause the SDI-12 "I" command to be sent using the address defined above. The results will be displayed on the screen. This command will normally respond with more data than what will fit on the screen so the returned data will scroll across the screen to allow the whole message to be viewed. If there were any errors a time out message will be displayed. See Appendix B for an example.

<System Options>	<SDI Transparent>	Send Identify Cmd?

3.3.6.5.4 SDI-12 Send Verify Command

Pressing the ENTER key will cause the SDI-12 "V" command to be sent using the address defined above. The results will be displayed on the screen. If there were any errors a time out message will be displayed. See Appendix B for an example.

<System Options>	<SDI Transparent>	Send Verify Cmd?

3.3.6.5.5 SDI-12 Send Measure Command

Pressing the ENTER key will cause the SDI-12 "M" command to be sent using the address defined above. The results will be displayed on the screen. If there were any errors a time out message will be displayed. See Appendix B for an example.

<System Options>	<SDI Transparent>	Send Measure Cmd?

3.3.6.5.6 SDI-12 Send Data 0 Command

Pressing the ENTER key will cause the SDI-12 "D0" command to be sent using the address defined above. The results will be displayed on the screen. This command may respond with more data than what will fit on the screen so the returned data will scroll across the screen to allow the whole message to be viewed. If there were any errors a time out message will be displayed. If the "D0" command did not retrieve all the available data, then the screen will indicate "Send Data 1 Cmd?" and will continue to bump the "Dx" command until all the data has been retrieved. See Appendix B for an example.

<System Options>	<SDI Transparent>	Send Data 0 Cmd?

3.3.6.5.7 SDI-12 Send Extended Command

Pressing the ENTER key will cause what ever is entered in the extended command variable to be sent using the address defined above. The "!" terminator will be added automatically. The results will be displayed on the screen. This command may respond with more data than what will fit on the screen so the returned data will scroll across the screen to allow the whole message to be viewed. If there were any errors a time out message will be displayed. This command can be used for any custom sensor setup needed. An example would be to set the slope on the H310 by entering and sending the command "XWS+2.3067".

<System Options>	<SDI Transparent>	Send Extended Cmd?

3.3.6.5.8 SDI-12 Edit Extended Command

This screen is used to enter or edit an extended command. When editing the command do not include the address as it will be added automatically using the address entered above. The "!" terminator may be included but is not needed as the H-500 will add it automatically if it is not defined.

<System Options>	<SDI Transparent>	Xcmd[XXXXXXXXXXXXXX]

3.3.6.6 H310 / H350Lt Setup Options

The following screens allow the user an easy way to configure the Design Analysis H310 and H350Lt sensors. These same setups can be done in the standard transparent mode using extended commands but is easier here.

<System Options>	<H310/H350Lt Setup >	SDI-12 Test Adrs:[0]
		Slope: [ ]
		Offset:[ ]

3.3.6.6.1 SDI-12 Test Address Command (H310)

This option sets the address that the H-500 should use to communicate with the H310 / H350Lt. This is the same as section 3.3.6.1.1.

<System Options>	<H310/H350Lt Setup >	SDI-12 Test Adrs:[0]

3.3.6.6.2 H310 / H350Lt Slope

This option will read and display the slope from the attached H310 / H350Lt sensor. The user may edit the slope value and reprogram the new value into the H310 / H350Lt. If the value for the slope is displayed as blanks then the H-500 was not able to read the slope form the sensor.

<System Options>	<H310/H350Lt Setup >	Slope: [ ]

3.3.6.6.3 H310 / H350Lt Offset

This option will read and display the offset from the attached H310 / H350Lt sensor. The user may edit the offset value and reprogram the new value into the H310 / H350Lt. If the value for the offset is displayed as blanks then the H-500 was not able to read the offset form the sensor.

<System Options>	<H310/H350Lt Setup >	Offset:[ ]

3.3.6.7 Handar 436B Setup Options

The following screens allow the user an easy way to configure the Handar 436B shaft encoder. These same setups can be done in the standard transparent mode using extended commands but is easier and more reliable here.

<System Options>	<Handar 436B Setup >	SDI-12 Test Adrs:[0]
		436 Slope: [+00.01]
		436 Ofst:[+000.00]

3.3.6.7.1 SDI-12 Test Address Command (436B)

This option sets the address that the H-500 should use to communicate with the Handar shaft encoder. This is the same as section 3.3.6.1.1.

<System Options>	<Handar 436B Setup >	SDI-12 Test Adrs:[0]

3.3.6.7.2 Handar 436B Slope

This option allows the user to set the slope or increment value for the Handar 436B shaft encoder. The sign can also be changed to set the CW and CCW rotation of the shaft.

! The Handar 436B has no command for reading the current slope, the value displayed when entering this option is a default value only. To actually program the Handar unit press the ENTER key to edit the value and then again to send the value to the encoder.

<System Options>	<Handar 436B Setup >	436 Slope: [+00.01]

3.3.6.7.3 Handar 436B Offset

This option allows the user to set the offset value for the Handar 436B shaft encoder.

! The Handar 436B has no command for reading the current offset, the value displayed when entering this option is a default value only. To actually program the Handar unit press the ENTER key to edit the value and then again to send the value to the encoder.

<System Options>	<Handar 436B Setup >	Ofst:[+000.00]

3.3.6.8 Serial Port Setup

The following screens allow user to set the baud rate and other configuration options for the RS232 communications port. This is the main menu screen allowing access to the serial port options.

<System Options>	<Serial Port Setup>	Baud Rate: [9600]
		H232-E In Use: [No]

3.3.6.8.1 Change Baud Rate

This option sets the baud rate for commands and data that is sent and received over the RS232 port. The default is 9600 which will be used for nearly all applications. If an older modem is used with the H-500 then the baud rate may be changed to match the older modem.

<System Options>	<Serial Port Setup>	Baud Rate: [9600]

3.3.6.8.2 H-232-E Used In System

The H-232-E is used only when the H-500 is to communicate with both a GOES radio and some other serial device like a modem. The H-232-E allows the H-500 to choose which serial device it wants to communicate with by selecting the desired slave port on the H-232-E. The GOES radio MUST be connected to slave port 1, and the communication device (MODEM) MUST be connected to slave port 0.

<System Options>	<Serial Port Setup>	H232-E In Use: [No]

3.3.6.9 Set Current Password

This screen is used to set the current password. Setting it to 'PASS' will disable the password function and allow all the screens and options to be accessed without having to enter in a password each time. If a new password is entered, make sure it is remembered in order to still be able to gain access to the main system options. If the password is forgotten then enter 'PASS' in the 'Enter Password' screen to gain access to the system. If a new password is entered then only the "System Status" menu options are available to the user unless they enter in the new password when prompted.

<System Options>	Set Password:[PASS]

3.3.6.10 Update the Firmware

Press <Enter> on this item only if you want to update the H-500 firmware from a FLASH Memory Card. You must first obtain a card with a new version of the firmware on it from Design Analysis.

<System Options>	Update the Firmware?

The H-500 will check the card for the proper format and display one of the following messages:

"PCMCIA Card Missing"	A PCMCIA card has not been installed.
"Data is Incompatible"	The card does not contain the proper firmware data.
"Vx.xx OK? ENT = Y"	The format is OK, press "ENT" to continue.

The H-500 will then display the following messages:

Please Wait...

Upgrade Complete

Now press "Cancel" and the following screen sill be displayed

Restarting System...

The H-500 will reinitialize itself with the new version of the firmware and be ready for use.

Chapter 4
Remote Communications

4.1 Introduction

Remote communications with the H-500 are through the RS-232 serial port using a menu interface. The H-500 has been designed to work with most terminals or terminal emulation programs that support the VT52 terminal standard. The menu interface allows the user to see the status of the H-500 and easily change any of the options of the system. The order of the options follows the basic sequence as the built in display.

All the options available under the remote access menus are the same as those described in Chapter 3. Refer to Chapter 3 for specifics on all the options available remotely.

Use the following steps to begin communicating with the H-500 using the MENU command:

1. Configure a terminal using the set ups listed below. A PC running a terminal emulation program like PCPLUS, XTALK, or the TERMINAL in Windows may be used in place of the terminal.

BAUD RATE:	9600
DATA BITS:	8
STOP BITS:	1
PARITY:	N
DUPLEX:	FULL
TERMINAL EMULATION:	VT52

2. Connect the terminal or PC to the H-500 RS-232 port using the cable provided.

3. Make sure there is power applied to the H-500.

4. Press the ENTER key a few times until the menu is displayed.

4.2 H-500 Main Menu Screen

The H-500 main menu screen shows all the top level options. Press the letter in front of the desired option to open the menu for that option. If the password option has been set then only the "View Status" options will be available to users that do not have the password. If there is no user action for a space of about one minute then the H-500 will automatically turn off.

```
*** H-500 Main Menu ***

V - View Status
P - Set Password

L - Logging Options
F - FLASH Card Options
R - GOES Radio Options
S - System Options
O - Off

Enter Option >
```

4.3 H-500 Status Menu Screen

The H-500 status menu screen shows some basic information about the system. There are also options for setting the time and date, and an option for taking an instantaneous reading of all inputs defined under the "FLASH Log Options" menu. The time and date can be viewed but not set unless the password is set to the default or matches the user defined password.

```
*** H-500 Status Menu ***

Version:   V010
CkSum:     PASS
Serial #:  S#001000
Battery:   +12.8

T - Time:  11:07:32
D - Date:  01/21/97
M - Measure
ESC - Return

Enter Option >
```

4.4 H-500 Logging Menu Screen

The H-500 logging menu screen shows all the logging options. This screen cannot be accessed unless the password is set.

```
*** H-500 Logging Menu ***

Next Measurement:        Not Logging

L - Logging:             Off
I - Scan Interval:       01:00:00
S - Skip Factor:         01
D - Def Start Time:      NO
T - Start Time:          N/A
F - FLASH File Name:     H500DATA
C - FLASH Card:          Off
A - AutoPrint:           Off
X - Remote Display:      Off
H - Header Message:      VALUE =
R - Report Options
ESC - Return

Enter Option >
```

4.5 H-500 FLASH Menu Screen

The H-500 FLASH menu screen has options for dumping the data and formatting the card. This screen cannot be accessed unless the password is set.

```
*** H-500 FLASH Menu ***

Card Status:
Percent Full:

D - Dump Data
F - Format Card
ESC - Return

Enter Option >
```

4.6 H-500 GOES Radio Menu Screen

The H-500 GOES radio menu screen allows the user to edit all of the radio options. This screen cannot be accessed unless the password is set. If the radio is not connected or not functioning as expected the message "Radio Not Responding" will be displayed.

```
*** GOES Radio Options ***

M - Mode:
A - Address:
T - Time:
S - Self Timed Menu
R - Random Menu
ESC - Return

Enter Option >
```

4.7 H-500 System Menu Screen

The H-500 system menu screen allows the user to edit basic system functions. This screen cannot be accessed unless the password is set.

```
*** H-500 System Menu ***

P - Set PassWord:     PASS
D - SDI-12 Digits:     04
H - H-232-E in Use:   NO
S - SDI-12 Transparent Mode
L - H-310 / H-350-Lt Menu

ESC - Return

Enter Option >
```

4.8 H-500 SDI-12 Transparent Menu Screen

The H-500 SDI-12 transparent menu screen allows the user to communicate with any sensor connected. This is a useful tool in debugging and testing sensors. All the standard SDI-12 commands can be sent with the press of a single key, and any extended command can be edited and sent easily also.

```
*** H-500 SDI-12 Transparent Mode ***

C - Change test Address:     0
A - Send Acknowledge Cmd
I -  Send Identify Cmd
V - Send Verify Cmd
M - Send Measurement Cmd
D - Send Data Retrieve Cmd
S - Send Extended Cmd
E - Edit Extended Cmd:
ESC - Return

Enter Option >
```

4.9 H-310 / H-350-Lt Menu Screen

This screen allows the user to set the slope and offset of the H-310 or H-350-Lt using a simple menu command instead of having to remember the extended command and using the SDI-12 transparent mode.

```
*** H-310 / H-350-Lt Menu ***

A - Set Test Address:  0
S -  Set Slope: 2.3067
O - Set Offset: 0.000

ESC - Return

Enter Option >
```

Chapter 5
Operation With the H-222 GOES Radio

5.1 Introduction to the H-222

The H-500 has special functions for operating with the *WATER*LOG® model H-222 GOES radio. The H-500 is used to set up the options in the GOES radio and to send data to the radio for transmission. The communication link between the H-500 and the GOES radio is over the RS232 line. The GOES Radio is capable of sending data at regular timed intervals called the Self Timed mode, and at random intervals called the Random mode. Both types of transmissions can be in operation at the same time. Each time the H-500 takes a measurement it will see if the data is to be sent to a buffer in the GOES radio. The GOES radio will transmit any data available in its buffer at its normal interval in the self timed mode.

Note: There are several options used to set up the GOES Radio. Some of these options are stored in memory in the radio and some in the H-500 memory. The options stored in the H-500 are protected from power failures, but those stored in the radio are not. To protect the options stored in the radio, make sure a backup battery is used with the GOES radio. A separate set of battery leads have been provided for a backup battery. The backup battery MUST be a rechargeable type because it will receive a charge from the same solar panel or other charging source as the main battery, but is isolated from delivering power to the main system.

5.2 Configuring the H-222 GOES Radio

The following sections describe the submenus used for configuring the H-222. Each of these menu items can be changed using the standard editing methods on the H-500. The following menu tree shows all the options to configure the GOES radio. The GOES radio must be connected to the RS232 port directly or through the H-232-E switch box. If the radio is not connected then an error message is displayed.

Several of the options below are assigned by NOAA / NESDIS, (United States Department of Commerce, National Oceanic and Atmospheric Administration, National Environmental Satellite Data and Information Services). Other options are user dependant. This chapter assumes the user has a basic understanding of the GOES system. It is the responsibility of the user to apply for and receive approval from NOAA for operating on the GOES system.

! Once the radio is enabled and logging is turned on, several of the GOES options cannot be edited. The message **"Logging And GOES Off"** will be displayed indicating to turn logging off and to disable the radio before the change can be made.

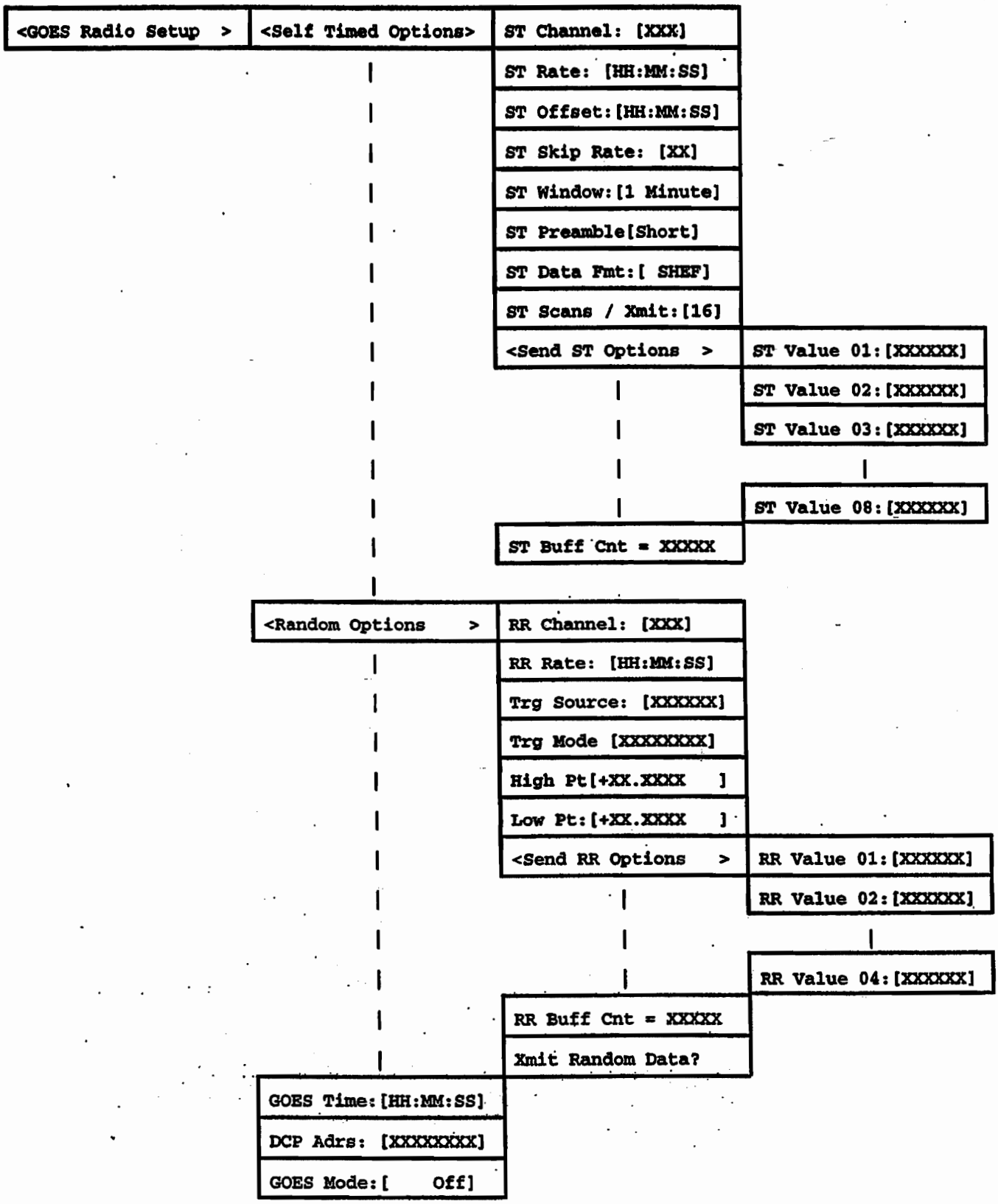
<GOES Radio Setup >
<Self Timed Options>
ST Channel: [XXX]
ST Rate: [HH:MM:SS]
ST Offset:[HH:MM:SS]
ST Skip Rate: [XX]
ST Window:[1 Minute]
ST Preamble[Short]
ST Data Fmt:[SHEF]
ST Scans / Xmit:[16]
<Send ST Options >
ST Value 01:[XXXXXX]
ST Value 02:[XXXXXX]
ST Value 03:[XXXXXX]
ST Value 08:[XXXXXX]
ST Buff Cnt = XXXXX
<Random Options >
RR Channel: [XXX]
RR Rate: [HH:MM:SS]
Trg Source: [XXXXXX]
Trg Mode [XXXXXXXX]
High Pt[+XX.XXXX]
Low Pt:[+XX.XXXX]
<Send RR Options >
RR Value 01:[XXXXXX]
RR Value 02:[XXXXXX]
RR Value 04:[XXXXXX]
RR Buff Cnt = XXXXX
Xmit Random Data?
GOES Time:[HH:MM:SS]
DCP Adrs: [XXXXXXXX]
GOES Mode:[Off]

5.2.1 Self Timed Options

This is the main screen that allows access to the setup options for the self timed transmissions. These screens use the abbreviation ST to indicate one of the Self Timed options.

```
<GOES Radio Setup  >  <Self Timed Options>  ST Channel: [XXX]
                                            ST Rate: [HH:MM:SS]
                                            ST Offset:[HH:MM:SS]
                                            ST Skip Rate: [XX]
                                            ST Window:[1 Minute]
                                            ST Preamble[Short]
                                            ST Data Fmt:[ SHEF]
                                            ST Scans / Xmit:[16]
                                            <Send ST Options  >  ST Value 01:[XXXXXX]
                                                   |             ST Value 02:[XXXXXX]
                                                   |             ST Value 03:[XXXXXX]
                                                   |                    |
                                                   |             ST Value 10:[XXXXXX]
                                            ST Buff Cnt = XXXXX
```

5.2.1.1 Self Timed Channel Number

This option allows the user to enter the self timed Transmission channel number. The range is 1 to 199 and represents a specific frequency for communicating with the satellite. The channel number will be assigned by NOAA.

```
<GOES Radio Setup  >  <Self Timed Options>  ST Channel: [XXX]
```

5.2.1.2 Self Timed Data Rate

This option allows the user to set the rate at which data will be transmitted over the self-timed channel. This rate is normally on an hourly interval; for example, 04:00:00 (every four hours). This setting along with the setting for the "ST Offset" determine the true time that data will be transmitted. See the next section for an example. This option also indirectly determines how much data will be sent on each transmission. See section 5.2.1.8 for an example of how all the options affect the data transmissions. This option cannot be edited while logging or while the radio is enabled.

<GOES Radio Setup >	<Self Timed Options>	ST Rate: [HH:MM:SS]

5.2.1.3 Self Timed Offset Time

This options is used to set the Transmission time relative to midnight. This setting along with the setting for the "ST Rate" determine the true time that data will be transmitted. As an example, assume the offset time is set to 00:30:00. The Transmission rate is set to 04:00:00. With this information the radio automatically sets up a schedule of Transmission windows of 00:30:00, 04:30:00, 08:30:00, 12:30:00, 16:30:00, and 20:30:00. At some point in time, 15:00:00 for example, the H-500 transfers data to the radio, then the radio waits for the next scheduled window which is 16:30:00, and transmits the data at that time. This option cannot be edited while logging or while the radio is enabled.

! When setting up a system to transmit GOES data, it is not necessary to calculate the next transmission time and enter that into the offset. This would cause the radio to possibly never send data. Remember: The offset must be less than the transmission rate.

! The radio will determine the time required to send the data, then center the data in the allotted Transmission time window. For example lets say the time to send the data was 40 seconds and a one minutes window was used, then the radio would automatically wait 10 seconds before transmitting the data. The data transmission would last 40 seconds leaving another 10 seconds at the end of the one minute window. This helps keep the Transmission in the desired time window even if the time clock has drifted slightly.

<GOES Radio Setup >	<Self Timed Options>	ST Offset:[HH:MM:SS]

5.2.1.4 Self Timed Skip Rate

The H-500 may be updating other devices like the flash card or remote display along with the GOES radio. The other devices may require to be updated at a faster rate than what is needed for sending data to the GOES radio. This option is used to set a skip factor indicating to the H-500 to send only every XX measurement to the GOES radio self timed buffer. The range is 01 to 99. For example, assume a remote display needs to be updated every minute and GOES data is desired every 15 minutes, then the logging scan rate would have to be set to 1 minute in order to update the display and the ST skip rate would be set to 15 so that every 15 minutes new data would be sent to the GOES radio. Even though data is sent to the radio every 15 minutes it may transmit that data at some other interval. See section 5.2.1.8 for more details and an example. This option cannot be edited while logging or while the radio is enabled.

<GOES Radio Setup >	<Self Timed Options>	ST Skip Rate:[XX]

5.2.1.5 Self Timed Window

NOAA will assign a window length indicating how much time is allowed to send the data. The two possibilities are 1 minute and 2 minutes. The default is a 1 minute window. This option cannot be edited while logging or while the radio is enabled.

<GOES Radio Setup >	<Self Timed Options>	ST Window:[X Minute]

5.2.1.6 Self Timed Preamble

At the start of a Transmission to the satellite a preamble signal is sent to the satellite at the beginning of a Transmission. The 2 standard preambles are called **long** and **short.** The default is a short preamble witch will take about a second to transmit. The long preamble is about 7.5 seconds which cuts down on the amount of data that can be sent in a one minute window. This option cannot be edited while logging or while the radio is enabled.

<GOES Radio Setup >	<Self Timed Options>	ST Preamble[XXXXX]

5.2.1.7 Self Timed Data Format

The self-timed transmission format can be a pseudo ASCII format called a **SHEF** format, or can be a pseudo binary format referred to as GOES **Binary**. There are three different styles of the SHEF format and two styles for the Binary format. The SHEF formats are basically an ASCII format that is easily understood, but it takes more time to send data in this format. If more data is required, then a binary format may have to be used. Refer to the GOES Data Format section for more details on the SHEF format and the GOES binary format. This option cannot be edited while logging or while the radio is enabled.

SHEF1: Send data exactly as defined in 'Send ST Options' menu including SHEF codes, and if selected, a battery voltage for every scan.

SHEF2: All SHEF codes will be sent first to act as column headers for the data. This will be the only time the SHEF codes will be sent per transmission. Send the data as defined in the 'Send ST Options' menu except for battery voltage. The battery voltage will be sent once at the end of the transmission even if it is not selected.

SHEF3: No SHEF codes will be sent at all. Send the data as defined in the 'Send ST Options' menu except for battery voltage. The battery voltage will be sent once at the end of the transmission even if it is not selected.

BINARY1: Send data exactly as defined in 'Send ST Options' in the standard GOES binary format, including a battery voltage for every scan if it has been selected.

BINARY2: Send the data as defined in the 'Send ST Options' menu in the standard binary format except for battery voltage. The battery voltage will be sent once at the end of the transmission even if it is not selected.

<GOES Radio Setup >	<Self Timed Options>	ST Data Fmt:[xxxxxx]

5.2.1.8 Self Timed Scans Per Transmission

This option allows the user to select the number of lines of data (scans) that will be sent with each self-timed transmission. This allows redundant data to be sent with each transmission. This option is interactive with the ST Rate option, the Logging Interval option and the ST Skip Rate option. This option defaults to 16 which will cause the H-500 to send 16 lines of new data each transmission based on a 4-hour transmission rate, a logging rate of 15 minutes, and a ST skip rate of 1. Under these conditions, if this option was set to 32, then 16 lines of new data and 16 lines of old (redundant) data would be transmitted each time. Sending redundant data is a common practice with the GOES system, and allows the data to be transmitted more than once, protecting against lost transmissions. The following table shows some common setup options and how the different options interrelate. This option cannot be edited while logging or while the radio is enabled.

ST Rate Setting	Log (Scan) Interval Setting	Calculated Scans / ST Rate	ST Skip Rate Setting	Scans / Transmission Setting	Calculated New Lines of Data	Calculated Redundant Lines of Data
04:00:00	00:15:00	16	1	16	16	0
04:00:00	00:15:00	16	1	32	16	16
04:00:00	00:01:00	240	15	16	16	0
04:00:00	00:01:00	240	15	32	16	16

Notice that with a one-minute scan rate there are 240 scans in the 4-hour transmission period. However, the skip rate is set to 15 so 240 divided by 15 = 16 meaning there will be 16 new scans sent to the GOES Radio in the 4-hour transmission window.

<GOES Radio Setup >	<Self Timed Options>	ST Scans/Xmit[XX]

5.2.1.9 Self Timed Transmission Options

The submenus under this option allow the user to select what data is to be sent to the radio and in what order. Defining the options here is like defining columns in a spreadsheet. ST value #1 will be the first data point sent to the GOES radio, ST value #2 the next and so on. Options include Date, Time, Battery Voltage, or any of the SDI-12 parameters. There are a total of 8

screens under the "<Send ST Options>" menu that allow the user to select up to 8 values to be sent to the radio.

<GOES Radio Setup >	<Self Timed Options>	<Send ST Options >	ST Value 01:[XXXXXX]
			ST Value 02:[XXXXXX]
			ST Value 03:[XXXXXX]
			ST Value 08:[XXXXXX]

5.2.1.10 Self Timed Buffer Counter

This is a status screen that shows how many bytes are in the self timed buffer of the radio. When logging is started and the GOES radio is enabled, the buffer will be filled with initialization data. This data will be zeros and will be updated as the H-500 logs new data values. If new data is to be sent to the radio buffer and there is not enough room then the new data will be lost. Error checking is done when the radio is enabled to prevent this condition. If data is being sent to the radio at the same time the radio is transmitting data, then the new data will be scheduled to be transmitted at the next interval.

<GOES Radio Setup >	<Self Timed Options>	ST Buff Cnt = XXXXX

5.2.2 Random Options

This is the main screen that allows access to the setup options for the random transmissions. Several of the screens use the abbreviation RR to indicate one of the Random mode options.

<GOES Radio Setup >	<Random Options >	RR Channel: [XXX]	
		RR Rate: [HH:MM:SS]	
		Trg Source: [XXXXXX]	
		Trg Mode[XXXXXXXXX]	
		High Pt[+XX.XXXX]	
		Low Pt:[XX.XXXXX]	
		<Send RR Options >	RR Value 01:[XXXXXX]
			RR Value 02:[XXXXXX]
			RR Value 04:[XXXXXX]
		RR Buff Cnt = XXXXX	
		Xmit Random Data?	

5.2.2.1 Random Channel Number

This option allows the user to enter the self timed Transmission channel number. The range is 1 to 199 and represents a specific frequency for communicating with the satellite. The channel number will be assigned by NOAA. This option cannot be edited while logging or while the radio is enabled.

<GOES Radio Setup. >	<Random Options >	RR Channel: [XXX]

5.2.2.2 Random Data Rate

This option allow the user to set the rate at which data will be transmitted over the random channel. When data is placed in the random transmit buffer of the radio, that data will be transmitted at some random time in the time window set by the "RR Rate" option. If this option is set to 00:30:00 (30 minutes) then if data is available, a random Transmission will happen at some point in that 30 minute window. Only one Transmission will happen in that window. This option cannot be edited while logging or while the radio is enabled.

! This rate must be equal to or faster than the system scan rate. If it is set slower than the system scan rate then data MAY NOT be transmitted.

<GOES Radio Setup >	<Random Options >	RR Rate:[HH:MM:SS]

5.2.2.3 Random Trigger Sourse

Random transmissions are sent based on some value meeting some condition. This option allows the user to select which input to monitor for triggering a random transmission. This option cannot be edited while logging or while the radio is enabled.

<GOES Radio Setup >	<Random Options >	Trg Source: [XXXXXX]

5.2.2.4 Random Trigger Mode

Random transmissions are sent based on one of several options. The following list the different conditions available and a description. This option cannot be edited while logging or while the radio is enabled.

> High Pt — Random transmissions only happen when the value of the selected source is greater than the high set point. An example would be an alert condition for a high water condition.

< Low Pt — Random transmissions only happen when the value of the selected source is less than the low set point. An example would be alarming that the battery was low.

In Window — Random transmissions only happen when the value of the selected source is less than the high set point and greater than the low set point.

Out Window — Random transmissions only happen when the value of the selected source is greater than the high set point, and less than the low set point. An example would be an alert condition for too much, or not enough water flow.

Always — Random transmissions are always sent. An example is to set the random rate to once a day and send the battery voltage for diagnostics.

<GOES Radio Setup >	<Random Options >	Trg Mode[XXXXXXXXXX]

5.2.2.5 Random High Trigger Point

This option is used to set the high trigger point. See the previous sections for a better understanding of this option.

<GOES Radio Setup >	<Random Options >	High Pt:[XXX.XXX]

5.2.2.6 Random Low Trigger Point

This option is used to set the low trigger point. See the previous sections for a better understanding of this option.

<GOES Radio Setup >	<Random Options >	Low Pt:[XXX.XXX]

5.2.2.7 Random Transmission Options

The submenus under this option allow the user to select what data is to be sent to the radio and in what order. Defining the options here is like defining columns in a spreadsheet. RR value #1 will be the first data point sent to the GOES radio, RR value #2 the next and so on. Options include Date, Time, Battery Voltage, or any of the SDI-12 parameters. There are a total of 4 screens under the "<Send RR Options>" menu that allow the user to select up to 4 values to be sent to the radio.

<GOES Radio Setup >	<Random Options >	<Send RR Options >	RR Value 01:[XXXXXX]
			RR Value 02:[XXXXXX]
			RR Value 04:[XXXXXX]

5.2.2.8 Random Buffer Counter

This is a status screen that shows how many bytes are in the random transmit buffer of the radio. When logging is started and the GOES radio is enabled the buffer will be cleared to 0. New data sent to the radios random buffer will overwrite any existing data before storing the new data. If data is being sent to the radio at the same time the radio is transmitting data, then the new data will be scheduled to be transmitted at the next interval.

<GOES Radio Setup >	<Random Options >	RR Buff Cnt: XXXXX

5.2.2.9 Transmit Random Data

Pressing the ENTER Key will cause the system to immediately send the data indicated by the Send Random Options settings. This may be useful for testing the system. The radio will not send data based on quick repeated key presses of the ENTER Key. There is approximately a minute delay between transmissions.

<GOES Radio Setup >	<Random Options >	Xmit Random Data?

5.2.3 Change GOES Time

This screen allows the user to set or change the time clock in the GOES radio. This is a different clock than the one in the H-500. This clock must be set to universal standard time, while the time clock in the H-500 is normally set to the local time.

<GOES Radio Setup >	GOES Time:[HH:MM:SS]

5.2.4 Data Collection Platform Address

This is the address of the Data Collection Platform. This address is assigned by NOAA and is automatically transmitted with the data to the GOES satellite. This option cannot be edited while logging or while the radio is enabled.

<GOES Radio Setup >	DCP Adrs:[XXXXXXX]

5.2.5 Select GOES Mode

This option is used to set the mode of operation. The radio will not allow the mode to be set if the other options are not set properly. If the self timed settings are such that the time required to send the data is greater than the one minute window then an error message is displayed. The Options are as follows:

OFF The radio is disabled, changes to the radio options may be done in this mode.

Timed	The radio is set for Self Timed transmissions only. No changes should be made to the radio options.
Random	The radio is set for Random transmissions. No changes should be made to the radio options.
Both	Both Self Timed and Random transmissions are enabled.

<GOES Radio Setup >	GOES Mode:[XXXXXX]

5.3 GOES Radio Setup Example

The following example assumes that NOAA assigned the following settings for the application.

DCP Address = ABCD1234
Window length = 1 Minute
ST channel # = 56
ST rate = 4 hours
ST offset = 02:37:00

The Options would be setup as follows:

GOES ST CHNL: [056]
ST Rate: [04:00:00]
ST Offset: [02:37:00]
ST Skip Rate: [01]
ST Window: [1 Minute]
ST Preamble[Short]
ST Data Fmt: [SHEF]
ST Scans / Xmit:[32]
    ST Value 01: [Date]
    ST Value 02: [Time]
    ST Value 03: [PSI]
    ST Value 04: [Batt]
GOES Time:[00:11:22] * set as needed
DCP Adrs: [ABCD1234]
GOES Mode: [Timed]

Lets also assume that the logging interval is set to 15 minutes.

Note that with 15 minute scan intervals there will be 16 scans per every GOES Transmission at 4 hours. Since the ST Scans Per Xmit option is set to 32 then there will be the 16 new scans plus 16 old scans transmitted.

With 4 values being sent in a SHEF (ASCII) format and each value is averaging 8 bytes, then there will be around 1024 bytes. At 100 baud the 1024 bytes would take over 100 seconds. This

is too long and would not fit in the allocated one minute window. To fix this there are several things that could be changed, the logging rate could be set to 30 minutes, the data could be sent in a binary format, less values could be sent to the radio, or the ST Skip Rate could be set to a higher number.

For this example lets assume the ST Skip Rate is changed to 2. This will cause the data sent to the radio to happen every other log interval. Now there will be about 500 bytes each 4 hours to be transmitted. At 100 baud the 500 bytes would take about 50 seconds. This would be right on the edge of working since there is not much extra time remaining for the preamble and non data information to be sent also.

5.4 GOES Data Format

The following shows the different types of data format for the GOES Radio system when used with the H-500:

- Self-timed SHEF format # 1. (Same as original SHEF format)
- Self-timed SHEF format # 2. (SHEF codes used as column headers and 1 battery value)
- Self-timed SHEF format # 3. (No SHEF codes and 1 battery reading)
- Self-timed binary format # 1. (Same as original binary format)
- Self-timed binary format # 2. (Battery value sent 1 time at end of the transmission)
- Random binary.

5.4.1 Self-Timed SHEF Format # 1

The self-timed SHEF format # 1 is an ASCII format with a code sequence (SHEF Code) that precedes each data value to indicate what the data is. The following shows some of the standard SHEF codes.

HG = Stage Height	TA = Air Temperature
VB = Battery Voltage	Sxy = SDI-12 sensor at address 'x' and parameter 'y'

The H-500 allows the user to select the order and type of data to be sent to the radio.

The following shows how one line of data would be formatted if the data selected to be transferred were, Date, Time, PSI, Temp and Batt voltage:

```
123456789012345678901234567890123456789012345678 9
CLMM/DD/YYYY HH:MM HG +PPP.PPP TA +TTT.T VB +VV.V
RF
                                                 Battery Voltage
                                              VB=Batt V. SHEF Code
                                         Air Temperature
                                     TA=Air Temperature SHEF Code
                             USER PSI Value
                         HG=SHEF Code for Stage Height
                     MM=Minute 00 to 59
                 HH=Hour 00 to 23
             YYYY=Year 1997 to 2096
         DD = Day 01 to 31
     MM = Month 01 to 12
   LF = Line Feed
 CR = Carriage Return
```

Notice this is 49 characters, but if the pressure or temperature reading is less than 3 digits to the left of the decimal, then the string length will be less.

The time required to send this string is 49 * 0.10 = 4.9 seconds.

If logging at 15-minute intervals and data is sent by the GOES Radio every 4 hours, then 16 lines of data would be buffered which would require 78 seconds for transmission. This is too long, and does not fit in the one minute window. The one minute window needs some overhead for guard time and sending site ID and other information. Data should take less than 50 seconds to transmit, leaving room for guard times, preamble, and other overhead. If the H-500 was set up this way, it would not allow the user to turn on the GOES radio until changes were made that would allow the data to fit in the one minute window.

A real transmission would look like the following:

Satellite Information text
12/10/1997 16:00 HG +34.21 TA +23.45 VB +12.5
12/10/1997 15:45 HG +34.21 TA +23.45 VB +12.5
12/10/1997 15:30 HG +34.21 TA +23.45 VB +12.5
|
|
12/10/1997 12:30 HG +34.21 TA +23.45 VB +12.5
12/10/1997 12:15 HG +34.21 TA +23.45 VB +12.5

5.4.2 Self-Timed SHEF Format # 2

The self-timed SHEF format # 2 is an ASCII format with a code sequence (SHEF Code) that is sent as column header information. The H-500 allows the user to select the order and type of data to be sent to the radio, except for battery voltage. The battery voltage will be sent only once at the end of the transmission, even if it is not selected.

The following shows how one line of data would be formatted if the data selected to be transferred were:

Date, Time, PSI, Temp and Batt voltage:

```
123456789012345678901234567890123 4
CLMM/DD/YYYY HH:MM +PPP.PPP +TTT.T
RF
|||||||||||||||||||||||||||||||||
|||||||||||||||||||||||||||||||||
|||||||||||||||||||||||||||||||||
```

5.4.3 Self-Timed SHEF Format # 3

The self-timed SHEF format # 3 is an ASCII format that DOES NOT use any SHEF codes. The H-500 allows the user to select the order and type of data to be sent to the radio, except for battery voltage. The battery voltage will be sent only once at the end of the transmission, even if it is not selected.

The following shows how one line of data would be formatted if the data selected to be transferred were:

Date, Time, PSI, Temp and Batt voltage:

```
123456789012345678901234567890123 4
CLMM/DD/YYYY HH:MM +PPP.PPP +TTT.T
RF
|||||||||||||||||||||||||||||||||
|||||||||||||||||||||||||||||||||
|||||||||||||||||||||||||||||||||
```

5.4.4 Self-Timed Binary

The self-timed binary format is a 6-bit per byte pseudo binary format. The GOES system supports 1, 2, and 3 byte values with 6, 12, and 18-bit precision respectfully. The H-500 will use 1 byte (6 bits) for the battery voltage, and will use 3 bytes (18 bits) for data values. The time and date will use 1 byte each for minute, hour, day and month. The following shows the byte format:

1 Byte Value:

BIT 7	BIT 6	BIT 5	BIT 4	BIT 3	BIT 2	BIT 1	BIT 0
Parity	Always 1	DATA 5	DATA 4	DATA 3	DATA 2	DATA 1	DATA 0

3 Byte Value:

23	22	21	20	19	18	17	16	15	14	13	12	11	10	9	8	7	6	5	4	3	2	1	0
P	1	D 17	D 16	D 15	D 14	D 13	D 12	P	1	D 11	D 10	D 9	D 8	D 7	D 6	P	1	D 5	D 4	D 3	D 2	D 1	D 0

The difference between the Binary Format # 1 and # 2 is that number 1 will send the data in exactly the same order as defined in the 'Send ST Options' menu, including the battery voltage. And format number 2 will always send the battery voltage at the end of the transmission, even if it is not selected.

The H-500 will format the data as follows:

```
12345678901234
BSTMDHMPPPTTTV
|     |||||||
|     |||||||└── Battery Voltage   (Byte * 0.3124 + 0.311)
|     |||||└── Air Temperature
|     ||||└── User PSI
|     |||└── M = Minute 00 to 59
|     ||└── H = Hour 00 to 23
|     |└── D = Day 01 to 31
|     └── M = Month 01 to 12
└── B = Binary Format Self-Timed Mode Indicator (BST).
      Sent only once per transmission.
```

Notice this is 11 characters (14 - BST characters = 11), much less than the SHEF format.

The time required to send this string is 14 * 0.10 = 1.4 seconds.

If logging at 15-minute intervals and data is sent by the GOES Radio every 4 hours, then 16 lines of data would be buffered which would require 16.64 seconds for transmission. If redundant data was sent, the transmission would still fit in the window taking about 35 seconds.

5.4.5 Random Binary

The random binary format is the same as the self-timed binary format with the exception of the 3 byte header characters that identifies the source as being from a random transmission.
The H-500 will format the data as follows:

```
12345678901234
BRTMDHMPPPTTTV
|     |||||||└── Battery Voltage (Byte * 0.3124 + 0.311)
|     |||||└── Air Temperature
|     ||||└── User PSI
|     |||└── M = Minute 00 to 59
|     ||└── H = Hour 00 to 23
|     |└── D = Day 01 to 31
|     └── M = Month 01 to 12
└── B = Binary Format Random Mode (BRT)
```

The time required to send this string is 14 * 0.10 = 1.4 seconds.

The random mode must send data out in short durations of a couple of seconds to help avoid transmission collisions. Random transmissions will not buffer the data so only one line will be sent at a time. This maintains the short transmission of just a few seconds, plus overhead for the total transmission duration.

5.5 GOES PSEUDO-BINARY LOOK-UP TABLE

PSEUDO BINARY CHAR.	THIRD CHAR. FROM RIGHT	SECOND CHAR. FROM RIGHT	RIGHT MOST CHART	PSEUDO BINARY CHAR.	THIRD CHAR. FROM RIGHT	SECOND CHAR. FROM RIGHT	RIGHT MOST CHAR.	BATT VOLTAGE
@	0	0	0	`	131072	2048	32	10.30
A	4096	64	1	a	135168	2112	33	10.61
B	8192	128	2	b	139264	2176	34	10.93
C	12288	192	3	c	143360	2240	35	11.24
D	16384	256	4	d	147456	2304	36	11.55
E	20480	320	5	e	151552	2368	37	11.86
F	24576	384	6	f	155648	2432	38	12.17
G	28672	448	7	g	159744	2496	39	12.48
H	32768	512	8	h	163840	2560	40	12.80
I	36864	576	9	i	167936	2624	41	13.10
J	40960	640	10	j	172032	2688	42	13.42
K	45056	704	11	k	176128	2752	43	13.73
L	49152	768	12	l	180224	2816	44	14.04
M	53248	832	13	m	184320	2880	45	14.35
N	57344	896	14	n	188416	2944	46	14.66
O	61440	960	15	o	192512	3008	47	14.98
P	65536	1024	16	p	196608	3072	48	15.30
Q	69632	1088	17	q	200704	3136	49	15.62
R	73728	1152	18	r	204800	3200	50	15.93
S	77824	1216	19	s	208896	3264	51	16.24
T	81920	1280	20	t	212992	3328	52	
U	86016	1344	21	u	217088	3392	53	
V	90112	1408	22	v	221184	3456	54	
W	94208	1472	23	w	225280	3520	55	
X	98304	1536	24	x	229376	3584	56	
Y	102400	1600	25	y	233472	3648	57	
Z	106496	1664	26	z	237568	3712	58	
[	110592	1728	27	{	241664	3776	59	
\	114688	1792	28	|	245760	3840	60	
]	118784	1856	29	}	249856	3904	61	
^	122880	1920	30	~	253952	3968	62	
_	126976	1984	31	?	258048	4032	63	

INSTRUCTIONS: A GOES pseudo-binary byte is represented by one character. All data values (except battery voltage, time and date) will be made up using three pseudo-binary bytes. To use the above table, look up the weight of each pseudo-binary character using the column according to the relative position of the character in the three byte pseudo-binary value as

transmitted by the H-500. To obtain the original value, add the weights of all three characters. If the value is greater than 131071, then subtract it from 131072 and change the sign to negative. Finally, divide the number by 100. The following is an example:

H^g = (32768 + 1920 + 39) / 100 = 347.27
iuA = ((167936 + 3392 + 1) - 131072) / 100 = -402.57

The far right column also shows the battery voltage while in the normal operating range.

5.6 Common GOES Terms

DAMS: Data Acquisition and Monitoring System.

DAPS: Data Collection System Automated Processing Subsystem.

DCP: Data Collection Platform.

DCS: Data Collection System.

DOMSAT: Domestic Communication Satellite.

DPS: Data Processing System.

GMT: Greenwich Mean Time.

GOES: Geostationary Operational Environmental Satellite.

NESDIS: National Environmental Satellite, Data, and Information Service.

NIST: National Institute for Standards and Technology.

NOAA: National Oceanic and Atmospheric Administration.

NWS: National Weather Service.

PDT: Platform Description Table.

! Each DCP will have a PDT defined on a computer system at NESDIS. If the table is not completely defined, then when data is retrieved the error message "PDT RECORD IS NOT COMPLETE," will appear. Part of this table describes the radio manufacture and model number. These items must be entered into the table as shown on page 5-15.

Manufacture: "Telonics, INC."
Model Number: "TGT-1"

Preamble: This is a carrier signal sent to the satellite before any data is sent.

Signal Type	Short Preamble	Long Preamble
Unmodulated Carrier	0.50 seconds	4.9 seconds
Alternating ones / zeros	0.48 seconds	2.4 seconds
Total Time	0.98 seconds	7.3 seconds

Shef Codes: A two character code that describes the DCP message data type. Common Shef codes are shown below.

HG = Stage
TA = Temperature Air
VB = Battery Voltage

Transmission Window: The scheduled time interval which a DCP can transmit data in the self-timed mode. This is normally a one-minute window.

UDT: User Description Table.

5.7 GOES Power Connections

The cable provided with the GOES Radio has two sets of power wires. One set for main power and one set for backup power. The main power wires have a horseshoe-shaped type of terminal connector on the ends made to be mounted on a screw type barrier strip. The backup wires have a female tab type of terminal connector made to connect to a rechargeable GEL CELL type of battery with male tabs for connections. The backup battery is used to retain the setup information of the GOES Radio in the event that the main power is removed or goes too low. If the backup battery is not used and power is interrupted, then GOES transmissions will not continue. Using the backup battery will allow the radio to start transmitting again when the main power source is restored to a normal level. If the main power drops to about 11.0 volts or less, transmissions will be suspended until the power is restored. The backup battery MUST be a 12 volt rechargeable type, like a GEL CELL.

There are 3 different types of data format for the GOES radio system when used with the H-500.

Self timed SHEF coded ASCII.
Self timed binary.
Random binary.

Chapter 6
Maintenance/Trouble Shooting

6.1 Maintenance

Sustained operation of the H-500 is almost maintenance-free. There is no desiccant or serviceable parts to maintain. Since the H-500 logs data from only SDI-12 sensors the accuracy is dependant on the sensors. It is always best to keep the unit as dry as possible and out of direct sun light.

6.2 Trouble Shooting

It is unlikely that this manual will ever contain trouble shooting tips to cover every problem that will be encountered. Feedback from customers is very valuable and greatly aids in the quest for constant product enhancement. Please feel free to call the factory for technical assistance and also with solutions you have found to past problems.

No SDI-12 Response

1) Verify power to the H-500, and the sensors. The H-500 will work at voltages as low as about 9.0 volts, but some sensors may require a voltage much closer to the 12 volt level. Look at the power supply requirements for all the sensors and H-500 and make sure the power source is adequate to power the complete setup.

2) Check all SDI-12 connections, including DATA and GND. Moisture over time will oxidize and corrode connectors and pins. A loose or broken wire will prevent communications with the sensors.

3) Check the pin out of your sensors for correct wiring.

4) Verify the address the H-500 is using to communicate with the sensor is the same as the sensor. The SDI-12 transparent mode can easily be used to test the different sensors.

5) Make sure that all the sensors connected to the H-500 have unique address. If two sensors have been set to the same address then neither one will function properly.

Intermittent Data

1) The H-500 only requests for data from the sensors and then records it. If the readings are not as accurate as expected then test the sensor for faults. If the sensor data is

logged as 0.00 then look for errors in the communications between the H-500 and the sensor. A logged value of 0.00 is the default if the H-500 timed out while trying to log data from a sensor.

2) Some sensors require regular maintenance like a ph probe may need to be cleaned on a weekly schedule. If this is not happening the sensor readings may start to drift away from the true value. Other sensors may require other types of service.

3) Some sensors require warm up delay times or other actions to happen to produce correct readings. Some Dissolved Oxygen probes may take a couple of minutes for an accurate reading, or to have some device turn on to stir the water as it is reading the value. Other sensors may require other types of special setups. Most sensors that require a delay will have some extended command that can be used to set the delay. Refer to the manual for the sensor in question.

Miscellaneous Problems

1) The lack of a proper earth ground can result is several unexplained problems. Please make sure the complete system is properly grounded.

Normally 80 percent of the problems can be related to power supply problems, bad or incorrect wiring, or system options are not set up correctly. In most cases these problems can easily be resolved. Whatever the problem, remember we are here to help with your application.

6.3 Common Questions Regarding the H-500

This section lists several common questions ask by users regarding the operation and function of the H-500.

1. Q: What happens if the battery voltage goes low?

A: A lot of this depends on what the system is doing, logging or not, and if GOES is being used. First, all setup information and variables of the H-500 are saved in non volatile memory meaning the power can be interrupted without loosing the information in this type of memory. If the unit was not logging then everything should be just fine. If logging was on then the H-500 will recognize this when it detects normal power and will try to start logging again. The old data file will be closed and a new file will be opened. This may take about 30 seconds and the system may seem unresponsive, but give it some time. If the GOES radio was also in use and it had its own backup battery then the radio setups should also have been saved. If the radio did not have its own backup battery then it will not continue to run once power is restored. Loosing power is always a big problem with computerized electronic equipment. Every effort has been made to protect your data, and to automatically resume normal operation, but there are cases that cannot be protected against. If the H-500 is writing data to the flash card as power is dropping or

being removed it could cause a loss of data. Every effort should be made by the user to insure adequate power is applied to all the equipment at the site.

2. Q: When is it safe to remove the FLASH data card?

   A: The FLASH card should only be removed if logging is turned off. If logging is turned on and data is being written to the card then removing it could corrupt data on the card. Turning off logging before removing the card makes sure the file is closed properly, and now the unit will not be using the card in any way making it safe to remove it.

3. Q: What can be done if the data on the card does become corrupted?

   A: Send the card to Design Analysis Associates. We can normally retrieve any data on the card and return the data to you on a standard 3½ inch floppy disk.

4. Q: What kind of cable is needed for the H-500 and RS-232 communications?

   A: This depends on what the H-500 is connected to. If the H-500 is connected to a modem then a straight through cable is used. This means pin 1 on one end connects to pin 1 on the other end and so on. If the H-500 is to talk directly to a PC then the cable must have crossed wires. A standard NULL modem cable could be used in this case. It is best to try this in the office under good conditions before going to the field. The wrong cable will definitely not work.

5. Q: How do I use a modem and a GOES radio at the same time since both require a serial port, and there is only one serial port on the H-500?

   A: The H-232-E, when used with the H-500 works as a port expander. The H-232-E has a master port that plugs into the H-500 and three slave ports, one for the modem, one for GOES, and one for a remote display.

6. Q: If I have several SDI-12 sensors to connect to the H-500, how is this to be done with only 1 set of terminal strips?

   A: Our guess is that 80% or more of the applications use only 1 or 2 sensors. In this case the terminal strip is sufficient. In the case of more sensors, the easiest way is to install a second terminal strip with say 6 or 8 positions, daisy chain from the H-500 to several positions on this new terminal strip. This can provide several locations to connect other sensors into.

7. Q: What if the sensor I am wanting to use is not an SDI-12 sensor?

   A: Design Analysis makes a series of products called sidekicks that are used to convert standard sensor outputs into an SDI-12 output format. Some examples are Voltage to SDI-12, and Event Counter to SDI-12. Call for the latest list of converters available.

8. Q: What if I set a password and then forget it?

   A: The word "PASS" will always get you into your system, once access has been gained, go look at what the password was set to under the system options menu.

9. Q: What is the difference between scan rate and log rate?

   A: Often these two terms are used interchangeably but there can be a difference. These terms have been used in manuals and in normal conversations intermixes also. One meaning is used to define how often the unit actually scans the sensors. The other meaning is used to define how often data is being saved or logged. Sometimes these two processes happen at the same time meaning every time the sensors are scanned the data is logged. Another example is to scan several times and log an average or maximum or some other computed value. Any way these two terms may be confusing. Look at the context of how the term is being used to help understand its meaning, and don't hesitate to ask for a better explanation.

Chapter 7
Technical Description

7.1 Interface Connectors

The following are connections necessary for proper operations.

7.1.1 Connecting the H-500 to Power

The H-500 has a 2-position terminal connector used for connecting the power source.

Power Connector

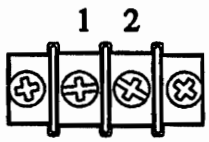

1 - Power (+12v)
2 - Ground

Figure 7-1. H-500 Power Connector

7.1.2 Connecting the H-500 to SDI-12 Sensors

The H-500 has two circular connectors (SideKick Connectors), and a 4-position terminal connector which are SDI-12 interface connections. The SideKick Connectors and the 4-position terminal connector are internally wired together.

SideKick Connector

1 - Power (+12v)
2 - Data
3 - Ground
4 - Not Connected

SDI-12 Connector

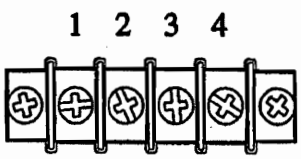

1 - Power (+12v)
2 - Data
3 - Ground
4 - Ground (Shield)

Figure 7-2. H-500 SDI-12 Interface Connectors

7.1.3 Connecting the H-500 to RS-232

The H-500 provides a serial port. The serial port is a 9-pin, RS-232 compatible, D-shell connector. It can be used for RS-232 communication or to drive a serial printer.

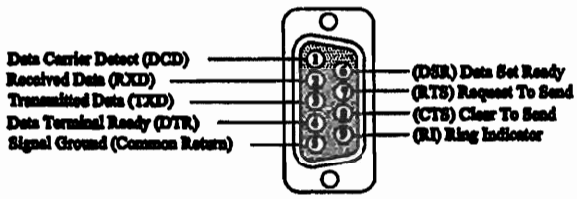

Figure 7-3. RS-232 Connector

7.1.4 Connecting the H-500 to EARTH GROUND

The H-500 provides a grounding post that **MUST BE CONNECTED TO EARTH GROUND.** Some SDI-12 sensors will report incorrect data and might not work properly if the H-500 is not correctly grounded. Connecting the H-500 to Earth Ground will help protect the H-500 from lightning damage.

GROUNDING POST
Connect to Ground Rod
or Other Earth Ground

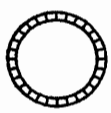

Figure 7-4. Grounding Post Connector

Appendix A
Specifications

ENVIRONMENT

Temperature

Standard Operating Range:	-25 to 60 °C
Extended Operating Range:	-40 to 60 °C (Option 1-ET)
Compensated Range:	Same as Operating Range
Storage:	-40 to 80 °C

Humidity

0-95% non-condensing

INTERFACE

SDI-12 Input

Protocol:	SDI-12, 7-bit even parity, 1 stop bit
Baud Rate:	1200

RS-232 Input / Output

Baud Rate:	9600
Protocol:	RS-232C, 8-bit no parity, 1 stop bit

MECHANICAL DATA

Physical

Enclosure:	Sealed, corrosion resistant fiberglass with clear Lexan® window
Size:	7.0 inches wide x 8.5 inches long x 4.3 inches deep
Weight:	4.25 pounds
Mounting:	Hardware supplied for wall mounting

POWER

Power

Input Voltage: 10.0 to 16.0 volts DC
Input Current:
Sleep Mode: 3.5 milliamperes maximum
Active Mode (measuring, display off): 50 milliamperes typical average
Active Mode (measuring, display on): 320 milliamperes typical average
(Auto display shut-off after 5 minutes)

MISCELLANEOUS

Accessories

SIDEKICK MODULES

Warranty

*WATER*LOG® Series H-500 is warranted against defects in materials and workmanship for one year from date of shipment.

Appendix B
SDI-12 Command and Response Protocol

B.1 SDI-12 Command and Response Protocol

This is a brief description of the Serial Digital Interface (SDI-12) Command and Response protocol used by the *WATERLOG*® Series Model H-500 sensor. Included is a description of the commands and data format supported by the H-500.

Refer to the document "A SERIAL DIGITAL INTERFACE STANDARD FOR HYDROLOGIC AND ENVIRONMENTAL SENSORS." Version 1.1 November, 1993 Coordinated by Campbell Scientific, Inc., Logan, Utah.

During normal communication, the data logger sends an address followed by a command to an SDI-12 sensor. The sensor then replies with a "response". In the following descriptions, SDI-12 commands and responses are enclosed in quotes. The SDI-12 address, and the command/response block terminators are defined as follows:

"a"	Is the sensor address. The standard addresses are the ASCII characters "0" to "9", yet the characters "A" to "Z", "a" to "z" and "*" may also be used. The H-500 can only retrieve data form sensors with numeric addresses. However in the SDI-12 transparent mode the H-500 can communicate with sensors that are using upper case letters for the address.
"!"	Is the last character of a command block.
"<cr><lf>"	Are carriage return (0D) hex and line feed (0A) hex characters. They are the last two characters of a response block.

Notes:

- All commands / responds are upper-case printable ASCII characters.
- Commands must be terminated with a "!" character.
- Responses are terminated with <cr><lf> characters.
- The command string must be transmitted in a contiguous block with no gaps of more than 1.66 milliseconds between characters.
- All ASCII-Hex commands, arguments and data values are transmitted most significant digit first.

B.2 Send Acknowledge Command

The Send Acknowledge command returns a simple status response which includes the address of the sensor. Any measurement data in the sensor's buffer is not disturbed.

Command	Response
"a!"	"a<cr><lf>"

Where:

a Is the sensor address.

B.3 Send Identification Command

The Send Identification command responds with sensor vendor, model, and version data. Any measurement data in the sensor's buffer is not disturbed.

Command	Response
"aI!"	"allcccccccmmmmmmvvvxx...xx<cr><lf>"

Where:

a	Is the sensor address ("0" to "9", "A" to "Z", or "*").
I	Is an upper-case ASCII character.
ll	Is the SDI-12 version compatibility level, e.g. version 1.0 is represented as "10".
cccccccc	Is an 8 character vendor identification to be specified by the vendor and usually in the form of a company name or its abbreviation.
mmmmmm	Is a 6 character field specifying the sensor model number.
vvv	Is a 3 character field specifying the sensor version number.
xx...xx	Is an optional field of up to a maximum of 13 characters to be used for serial number or other specific sensor information not relevant to operation of the data recorder.

B.4 Initiate Verify Command

The Verify Command causes a verify sequence to be performed. The result of this command is similar to the "aM!" command except that the values generated are normally system test data. The data generated in response to this command is placed in the sensor's buffer for subsequent collection using "D" commands. The data will be retained in the sensor until another measurement or verify command is executed.

Command	Response	Description
"aV!"	"atttn<cr><lf>"	Initiate verify sequence

Where:

a Is the sensor address ("0" to "9", "A" to "Z", or "*").

V Is an upper-case ASCII character "V" for the Verify command.

ttt Is a three digit integer (000-999) specifying the maximum time, in seconds, the sensor will take to complete the command and have data available in its buffer.

n Is a single digit integer (0-9) specifying the number of values that will be placed in the data buffer. If "n" is zero (0), no data will be available using subsequent "D" commands.

B.5 Measure Command

The Measure Command causes a measurement sequence to be performed. Data values generated in response to this command are stored in the sensor's buffer for subsequent collection using "D" commands. The data will be retained in the sensor until another "M" or "V" command is executed.

Command	Response	Description
"aM!"	"atttn<cr><lf>"	Standard measurement command

Where:

a Is the sensor address ("0" to "9", "A" to "Z", or "*").

M Is the upper-case ASCII "M" character for Measurement command.

ttt Is a three digit integer (000-999) specifying the maximum time, in seconds, the sensor will take to complete the command and have new data available in its buffer.

n Is a single digit integer (0-9) specifying the number of values that will be placed in the data buffer. If "n" is zero (0), no data will be available.

Upon completion of the measurement, a service request "a<cr><lf>" is sent to the data logger indicating the sensor data is ready. The data logger may wake the sensor with a break and collect the data any time after the service request is received or the specified processing time has elapsed.

B.6 Send Data Command

The Send Data command returns sensor data generated as the result of previous "aM!" or "aV!" commands. Values returned will be sent in 33 characters or less. The sensor's data buffer will not be altered by this command.

Command	Response
"aD0!" through "aD9!"	"apd.d ... pd.d<cr><lf>"

Where:

a	Is the sensor address.
D0..D9	Are upper-case ASCII characters D for the retrieve Data command, and the number is used to sequence the D command to retrieve all the data.
p	Is a polarity sign (+ or -).
d.d	Represents numeric digits before and/or after the decimal. A decimal may be used in any position in the value after the polarity sign. If a decimal is not used, it will be assumed to be after the last digit. For example: +3.29 +23.5 -25.45 +300

If the number of values returned by a "aD0!" command is less than the number specified by the result of the previous "M" or "V" command, the rest of the data must be collected using "aD1," "aD2!" .... "aD9!" until all values specified have been collected.

If one or more values were specified and a "aD0!" returns no data (a<CR><LF> only), it means that the measurement was aborted and a new "M" command must be sent.

B.7 Extended Commands

The transparent mode of the H-500 has the ability to edit and send extended commands to connected sensors. Most all sensors will have some extended commands used for sensor specific setups. The user must refer to the manual of the sensor for a list of the extended commands for that sensor.

Model
H-500XL™

WATERLOG®
SERIES

Owner's Manual

Model
H-500XL™

Data Collection Platform

WATERLOG® SERIES

Owner's Manual

Revision: 1.12

NOTICE

This product embodies technology that is confidential and proprietary technology of DESIGN ANALYSIS ASSOCIATES, INC., and which is protected by United States copyright laws and international copyright treaty provisions, and/or by contract and applicable laws of trade secrecy. These include all Software, Printed Circuit Board Artwork, Schematic Diagrams, and Technologies applied therein. The enclosure encasing the electronics of this instrument may not be opened without written consent of DESIGN ANALYSIS ASSOCIATES, INC., and any attempt to do so without such written authorization constitutes a breach of contract and will also void any applicable warranty for the product.

Design Analysis Associates, Inc.
75 West 100 South
Logan, UT 84321 USA
Phone: (435) 753-2212
Fax: (435) 753-7669
Internet: www.waterlog.com
E-mail: sales@waterlog.com

Table of Contents

User Agreement/*WATER*LOG® Warranty W-1

Chapter 1 Introduction

1.1 Introduction to the H-500XL™ 1-1
1.2 Unpacking the H-500XL™ 1-2
1.3 About the Manual 1-2
1.4 Manual Updates 1-2
1.5 Web Page Support 1-4

Chapter 2 Hardware Options and Installation

2.1 Mechanical Mounting 2-1
2.2 Front Panel Description 2-1
2.2.1 Earth Ground Lug 2-1
2.2.2 Pressure Reference Port (Vent) / Pressure Port (Input) 2-2
2.2.3 Bubbler / Aux Port 2-2
2.2.4 RS-232 Ports 2-2
2.2.5 Analog Input Section 2-4
2.2.5.1 Analog Input Channels 2-4
2.2.5.2 Analog Grounds 2-4
2.2.5.3 Switched +5 Volt Reference Excitation 2-5
2.2.6 Wind Speed Input (AC Frequency Input) 2-5
2.2.7 Event Counter Input 2-6
2.2.8 4 to 20 Milliamp Output 2-7
2.2.9 Digital I/O 1 and 2 2-8
2.2.10 SDI-12 Section 2-9
2.2.11 Power Connections 2-10
2.3 Testing the Installation 2-10

Chapter 3 Detailed Operation

3.1 Overview 3-1
3.2 Modes of Operation 3-1
3.2.1 SDI-12 Sensor Mode 3-1
3.2.2 Operation as a Data Logger DCP 3-1
3.2.3 Operation Using Auxiliary Outputs 3-2
3.2.4 Operation with the H-355 Gas Purge System (Bubbler) 3-2
3.3 Keypad/Display Operation 3-3
3.4 Familiarization 3-7
3.5 Main Menu Description 3-7
3.6 Sensor Input Setup Options 3-10
3.6.1 Counter Setup 3-12
3.6.2 Analog 1 - 4 Setup 3-13
3.6.3 Frequency Setup 3-15
3.6.4 Dig I/O Setup 3-15
3.6.5 Quadrature Shaft Encoder Input 3-19
3.6.6 SDI Transparent 3-19

3.6.7 H-310 Setup 3-21
3.6.8 H-330 Setup 3-22
3.7 Output Options 3-23
3.7.1 Logging Options 3-26
3.7.2 GOES Options 3-31
3.7.3 Remote Display 3-31
3.7.4 Voice Modem 3-31
3.7.5 Auto Print [Off] 3-32
3.7.6 ALERT Radio 3-32
3.7.7 Email Options 3-37
3.7.8 4 to 20 mA Options 3-39
3.8 Data Options 3-39
3.9 Scan Setup 3-42
3.10 System Setup 3-43
3.11 System Status 3-49
3.12 Accessory Setup 3-51

Chapter 4 Remote Operation (Menu Mode)

4.1 Remote Menu Interface 4-1
4.2 General Operations 4-1
4.3 Main Menu Screen 4-2
4.4 V - View Status Screen 4-3
4.5 I - Sensor Input Options Screen 4-5
4.5.1 C - Counter / Frequency Setup 4-5
4.5.2 D - Digital I/O Setup 4-7
4.5.3 A - Analog Input Setup 4-8
4.5.4 G - Generic SDI-12 Options 4-9
4.6 D - Data Options 4-10
4.7 O - Output Options 4-12
4.7.1 L - Logging Options 4-12
4.7.2 G - GOES Radio Options 4-16
4.7.2.1 G - GOES Main Menu 4-16
4.7.2.1.1 Self Timed Options 4-17
4.7.2.1.2 Random Options 4-20
4.7.3 Remote Display Setup 4-22
4.7.4 Voice Modem Options 4-22
4.7.5 ALERT Radio Options 4-23
4.7.6 E - Email Options 4-26
4.7.7 F - 4 to 20 Milliamp Options 4-28
4.8 S - Scan Options 4-29
4.9 C - Configure System 4-29
4.9.1 M - Sensor Mode Setup 4-30
4.9.2 P - Port Setup 4-30
4.9.3 Status Screens 4-32
4.9.4 C - Configuration Files Menu 4-33
4.9.5 G - Time Sync Options 4-33
4.9.6 F - Functions Menu 4-34
4.10 Accessory Setup Options 4-42
4.10.1 P - Gas Purge System Setup 4-43

Chapter 5 Operation with the GOES Radio

5.1 Introduction 5-1
5.2 Configuring the GOES Radio 5-1
5.3 GOES Radio Type 5-3
5.4 Select GOES Mode 5-3
5.5 GOES Time 5-4
5.6 Data Collection Platform Address 5-4
5.7 Select GOES Preamble 5-4
5.8 Self-Timed Options 5-5
5.9 Random Options 5-11
5.10 GOES Radio Setup Example 5-13
5.11 GOES Binary Data 5-15
5.12 GOES PSEUDO-BINARY LOOK-UP TABLE 5-17
5.13 Common GOES Terms 5-18
5.14 Julian Day Tables 5-20

Chapter 6 Operation With the H-355 "Smart Gas" System

6.1 Introduction to the H-355 6-1
6.2 Configuring the H-355 6-1
6.2.1 Auto Purge Option 6-1
6.2.2 Bubble Rate Option 6-2
6.2.3 Purge Threshold Level 6-2
6.2.4 Purge Pressure Level 6-3
6.2.5 Purge Time Duration 6-3
6.2.6 Manual Purge Option 6-3
6.2.7 Timed Purge Option 6-3
6.2.8 Tank Pressure Status 6-4
6.2.9 Line Pressure Status 6-4
6.2.10 Last Purge Status 6-4
6.2.11 Purged XXX Times 6-4
6.3 H-355 Configuration Drawing 6-5

Chapter 7 Maintenance/Trouble Shooting

7.1 Maintenance 7-1
7.2 Trouble Shooting 7-1

Appendix A Specifications A-1

Appendix B SDI-12 Command and Response Protocol

B.1 SDI-12 Command and Response Protocol B-1
B.2 Measure Command B-2
B.3 Initiate Verify Command B-4
B.4 Send Data Command B-5
B.5 Send Acknowledge Command B-6
B.6 Send Identification Command B-7

H-500XL™ Keypad Menu Tree

H-500XL™ PC Menu Tree

User Agreement/ *WATER*LOG® Warranty

1. NATURE OF THE PRODUCT

This agreement accompanies a data collection system comprising micro-coded circuitry and other electronic equipment sealed in an enclosed housing and packaged together with written instructional materials. The packaged electronic circuitry and instructional materials herein are collectively referred to as the "PRODUCT." The PRODUCT is made available from DESIGN ANALYSIS ASSOCIATES, INC., of 75 West 100 South, Logan, Utah, 84321 (hereinafter referred to as "DESIGN ANALYSIS") and contains information and embodies technology that is confidential and proprietary to DESIGN ANALYSIS, and the availability and use of the PRODUCT is extended to you, the USER, solely on the basis of the terms of agreement which follow.

2. ACKNOWLEDGMENTS BY USER

Opening the package which encloses the accompanying PRODUCT indicates your acceptance of the terms and conditions of this agreement and constitutes an acknowledgment by you of the confidential and proprietary nature of the rights of DESIGN ANALYSIS in the PRODUCT.

3. DUTIES OF YOU, THE USER

In consideration for the access to and use of the PRODUCT extended to you by DESIGN ANALYSIS, and to protect the confidential and proprietary information of DESIGN ANALYSIS, USER agrees as follows:

(a) USER agrees that they will not open the sealed housing of the PRODUCT and that they will take all necessary precautions to prevent their employees, agents, subcontractors, and resellers from doing so.

(b) USER agrees that they will not remove from the exterior of the housing of the PRODUCT any warnings against opening or notices of proprietary interest placed thereon by DESIGN ANALYSIS and that they will take all necessary precautions to prevent their employees, agents, subcontractors, and resellers form removing such markings therefrom.

(c) USER agrees to treat the PRODUCT with the same degree of care as USER exercises in relation to their own confidential and proprietary information.

(d) USER agrees to return the PRODUCT to DESIGN ANALYSIS if and when the PRODUCT is deemed to be no longer of use. In return therefore, USER will receive from DESIGN ANALYSIS a redemption fee of $10.00.

4. LICENSE

The PRODUCT is made available under license from DESIGN ANALYSIS. In consideration of payment, USER is hereby granted a limited right under applicable trade secret and copyright rights to use the PRODUCT. THE PAYMENT DOES NOT CONSTITUTE A PURCHASE OF THE PRODUCT, AND THE RIGHT TO USE THE PRODUCT IS NONTRANSFERABLE, EXCEPT TO A PARTY AGREEING TO BE BOUND BY TERMS CONSISTENT WITH THIS AGREEMENT. THIS MEANS THAT THE USER IS NOT AUTHORIZED TO SELL OR LEASE THE RIGHT TO USE THE PRODUCT, OR ANY PORTION THEREOF, TO ANY INDIVIDUAL OR COMPANY GAIN, OR OTHERWISE, WITHOUT OBTAINING THE AGREEMENT OF SUCH INDIVIDUAL OR COMPANY TO ABIDE BY THE TERMS OF THIS AGREEMENT. ALL RIGHTS NOT SPECIFICALLY GRANTED ABOVE ARE RESERVED BY DESIGN ANALYSIS.

5. TERM

USER may enjoy these rights only as long as their possession of the PRODUCT shall continue to be rightful. These rights will cease if the PRODUCT is returned to DESIGN ANALYSIS under the terms of any redemption offer, warranty, money-back guarantee, or if USER transfers the PRODUCT to another party on terms inconsistent with this agreement.

6. LIMITED WARRANTY

(a) What is Covered

DESIGN ANALYSIS warrants that for a period of six months from the time of purchase the functions to be performed by the PRODUCT will be substantially in compliance with USER documentation. DESIGN ANALYSIS also warrants that the PRODUCT will be free from defects in materials and workmanship for a period of ONE YEAR from the date of purchase.

(b) What USER Must Do

If the product fails to satisfy the above warranty, USER must notify DESIGN ANALYSIS in writing within the applicable period specified above, and reasonably cooperate with the directions they receive from DESIGN ANALYSIS.

(c) What DESIGN ANALYSIS Will Do

DESIGN ANALYSIS will repair the PRODUCT or will endeavor to provide a replacement of same within a reasonable period of time. In the event that DESIGN ANALYSIS is unable to make the necessary repairs or replacement within a reasonable period of time, the original purchase price will be refunded upon the return of the PRODUCT to DESIGN ANALYSIS.

(d) Limitations

(i) THIS LIMITED WARRANTY IS VOIDED WHERE THE SEALED HOUSING OF THE PRODUCT HAS BEEN OPENED.

(ii) THE ENTIRE REMEDY FOR BREACH OF THIS LIMITED WARRANTY SHALL BE LIMITED TO REPLACEMENT OF THE DEFECTIVE PRODUCT OR REFUNDING OF THE PURCHASE PRICE, AS SET FORTH ABOVE. IN NO EVENT WILL THE LIABILITY OF DESIGN ANALYSIS TO USER OR TO ANY OTHER PARTY EXCEED THE ORIGINAL PURCHASE PRICE OF THE PRODUCT, REGARDLESS OF THE FORM OF THE CLAIM.

(iii) EXCEPT FOR THE EXPRESS WARRANTIES ABOVE, DESIGN ANALYSIS SPECIFICALLY DISCLAIMS ALL OTHER WARRANTIES, INCLUDING, WITHOUT LIMITATION, ALL IMPLIED WARRANTIES OF MERCHANTABILITY AND FITNESS FOR A PARTICULAR PURPOSE.

(iv) UNDER NO CIRCUMSTANCES WILL DESIGN ANALYSIS BE LIABLE FOR SPECIAL, INCIDENTAL, CONSEQUENTIAL, INDIRECT, OR ANY OTHER DAMAGES OR CLAIMS ARISING FROM THE USE OF THIS PRODUCT, THIS INCLUDES LOSS OF PROFITS OR ANY OTHER COMMERCIAL DAMAGES, EVEN IF ADVISED OF THE POSSIBILITY OF SUCH DAMAGES. IN NO EVENT WILL DESIGN ANALYSIS BE LIABLE FOR ANY CLAIMS, LIABILITY, OR DAMAGES ARISING FROM MODIFICATION MADE THEREIN, OTHER THAN BY DESIGN ANALYSIS.

(v) Should the exclusive remedy stated in subparagraph 6 (d) (ii) above be determined by a proper court of law to have failed of its essential purpose, the limitation of the obligations of DESIGN ANALYSIS stated in subparagraphs 6 (d) (iii) and (iv) shall remain valid.

(vi) THIS LIMITED WARRANTY GIVES USER SPECIFIC LEGAL RIGHTS. USER MAY ALSO HAVE OTHER RIGHTS WHICH VARY FROM STATE TO STATE. SOME STATES DO NOT ALLOW LIMITATIONS ON HOW LONG AN IMPLIED WARRANTY LASTS OR THE EXCLUSION OF INCIDENTAL OR CONSEQUENTIAL DAMAGES, SO THOSE LIMITATIONS OR EXCLUSIONS MAY NOT APPLY.

7. BINDING AGREEMENT

This is a binding agreement, and if not understood, USER should seek competent legal advice. By paying for the PRODUCT and opening the package, USER acknowledges to have read this agreement and has agreed to be bound by its terms and conditions.

8. COMPLETE AGREEMENT

This agreement is the complete and exclusive statement of the agreement between USER and DESIGN ANALYSIS and supersedes all proposals for prior agreements and understandings, whether oral or written, and all other communications relating to the subject matter of this agreement.

9. GOVERNING LAW

This Agreement and its validity and interpretation shall be governed by the laws of the State of Utah, notwithstanding any choice of law rules of Utah or any other state or jurisdiction.

10. U.S. GOVERNMENT RESTRICTED RIGHTS

Use, duplication, or disclosure by the United States Government is subject to restrictions set forth in paragraph (c) (1) (ii) of the rights in Technical Data and Computer Software clause at 52.227-7013. The Contractor-manufacturer is DESIGN ANALYSIS ASSOCIATES, INC., 75 West 100 South, Logan, Utah 84321.

Chapter 1
Introduction

1.1 Introduction to the H-500XL™

The H-500XL™ is the Next Generation of the H-500 Data Collection Platform (DCP) / Data Logger. Customer driven enhancements have vastly broadened the capabilities of the H-500. New features of the H-500XL™ include general analog inputs, digital I/O, frequency and event counters, built-in 4-20 mA output, internal non-volatile multi-megabyte memory, increased speed, multiple serial ports, and a complete serial user interface.

The keypad and display are the same as the H-500, and the menu operations are very similar. Current users should be fairly familiar with the new unit.

Uses, Functions, Features, and Attributes of the H-500XL™:

- Operates over a wide temperature range: - 40°F to +140°F (- 40°C to +60°C).
- Easy to use program interface and push button keypad. Programming does not require an external device (i.e., a laptop computer), although all programming and data retrieval can be done through the serial port to a PC.
- Provides a bright, easy-to-read display with automatic power shut-off after 5 minutes.
- Four general purpose analog input channels.
- Switch closure event counter.
- AC frequency counter allows direct input for wind speed sensors, etc.
- Designed to output a 4-20 mA signal (No external module required).
- Three serial ports provide for easy installation of multiple serial devices.
- Complete serial interface provides both a command mode for automated use and a menu mode for human interaction. Both modes provide complete system programming and data retrieval.
- Built-in data logging functions which store the data in non-volatile internal memory.
- Common interface support for 100, 300, and 1200 Baud GOES Transmitters.
- Support for basic to complex math operations for non-linear sensors.
- Designed to be compatible with ***all*** SDI-12 data loggers, and sensors.
- Packaged in a sealed NEMA 4 enclosure.

1.2 Unpacking the H-500XL™

You should have received the following items:

- The H-500XL™ instrument
- 2-position power terminal block
- 18-position sensor I/O terminal block
- The H-500XL™ Owner's Manual

- Wall mounting hardware for the H-500XL™: (4) 10-32 screws, (4) plastic mounting tabs
- Communication cable
- NULL modem adaptor
- Gender changer

Note: If the H-500XL™ was shipped on the H-250 mounting board, additional hardware may be used in the installation, depending on how the unit was purchased.

1.3 About the Manual

This manual will show you how to properly install and operate your H-500XL™. The installation procedures and operational functions are very simple and easy to use. Please take time to read through the manual, it will help answer most questions you have concerning the H-500XL™ and it's capabilities. The web page at http://www.waterlog.com will have manual updates and advanced sections of the manual in PDF format, allowing customers to print extra copies or newer versions of the manual.

1.4 Manual Updates

As new versions of software are released, manual updates will also be provided. This section of the manual will include the main changes from one version of firmware to the next.

Version 1.00
Initial release

Version 1.01
Added support for the external switch.
Added ALERT Radio options.

Version 1.02
Added code to prevent data card access if the battery is below 9.5 volts.
Added character and line feed delay options for radio modem support.
Added save and retrieve setup support.
Changed "View Data" option to look only at data files.
Remote menu screens only update if needed.

Version 1.03
Changed code to properly reset the digital I/O pins to an input when resetting defaults.

Version 1.04
Added report functions for logged data: Average, Max, Min, etc.
Added configurable sensor mode.
Changed FAT (File Allocation Table) to handle larger data cards.
Added support for HDR GOES Transmitters.

Version 1.05

Added VT-100 terminal emulation mode.
Allow files other than data to be transmitted from the unit.
Changed how data memory card was detected to prevent Data Memory Error message from being displayed when really no errors existed.

Version 1.10

Enhanced support for HDR GOES Transmitters.
Added code to sync the time clock to a GPS sensor.
Added code to center the GOES transmission in the selected window.
Added data formats for each column of GOES data for ASCII format.
Added bubbler line test code.
Changed counters so they do not reset when scanning is turned on.
Added user defined generic math functions.

Version 1.11

Added option to use Functions for SDI-12 parameters in sensor mode.
Changed Quad output option to track with float value rather than integer.
Added warning messages to GOES options for local display. This also prevents any changes to GOES options that could cause problems if you do not stop GOES first.

Version 1.12

Fixed GOES from adding an extra character to the transmission when channel order was selected and SHEF codes were used and only one scan per transmission was sent.
Added more error messages to GOES forced transmission.
Added option to force a ST transmission.
Enhanced the "View ST Data" option to better match the actual data being transmitted.
BRT was not being sent on a random transmission, only on a forced transmission.
Added ascending / descending data transmission option.
Added support for Telonics GOES radio.
Fixed GOES address correction if last character of the address was a letter.
Fixed several minor GOES formatting issues.
Changed time sync options so user can select what gets synced, GOES, logger, both, etc.
Changed sync option to try only once per day.
Fixed H-310 menu from editing the stage if the sensor did not respond, same for units.
Reset real time clock interrupt when restarting scanner to prevent unit from taking a measurement immediately when power is reapplied.
Changed labels on the counter options to match the table text better "Counts" and "TotCnt".
Added offset for ALERT timed transmission.
Remove SDI-12 M1 command from H-500XL™.
Remove Stage and Temp options from H-500XL™.
Math functions can now be edited on the PC, and digital I/O and GOES random transmission condition statements can be edited from the local keyboard.
Added logic expressions = =, !=, and variables seconds, minutes, hours, day, month, and year.

Added @ functions to the math section (evaluated automatically at beginning of each scan).
Added status screen showing number of purges.
Added timed purge code.
Added date format options for European customers.
Added code for analog inputs to only be read once per scan, not every time used, this makes logged and GOES values the same, and speeds up the system.
Added 4 to 20 milliamp options to the command mode.
Forced card initialization to happen every time the cards are accessed. Slows down some menus, but it is more reliable.
Changed "Not While Logging" to " Not While Scanning".
Enabled XMODEM transfer code.
Added a character delay for sending ALERT data to the radio. The High Sierra radio was not able to keep up if data was sent to it for multiple channels.

1.5 Web Page Support

The web page at http://www.waterlog.com will provide ongoing support for the H-500XL™ series of products. This includes advanced sections of the manual, new versions of the main manual, new firmware updates, brochures, technical notes, PC support software, etc.

Chapter 2
Hardware Options and Installation

2.1 Mechanical Mounting

This chapter describes the basic procedure for installing the H-500XL™ including all wiring. For proper installation you will need:

- The H-500XL™ mounting hardware
- Small flat blade screw driver
- Power and communication cables
- The H-500XL™ Owner's Manual

2.2 Front Panel Description

Figure 2-1 illustrates the physical input/output features on your H-500XL™ and briefly describes their purposes. This diagram will help show where you should make connections.

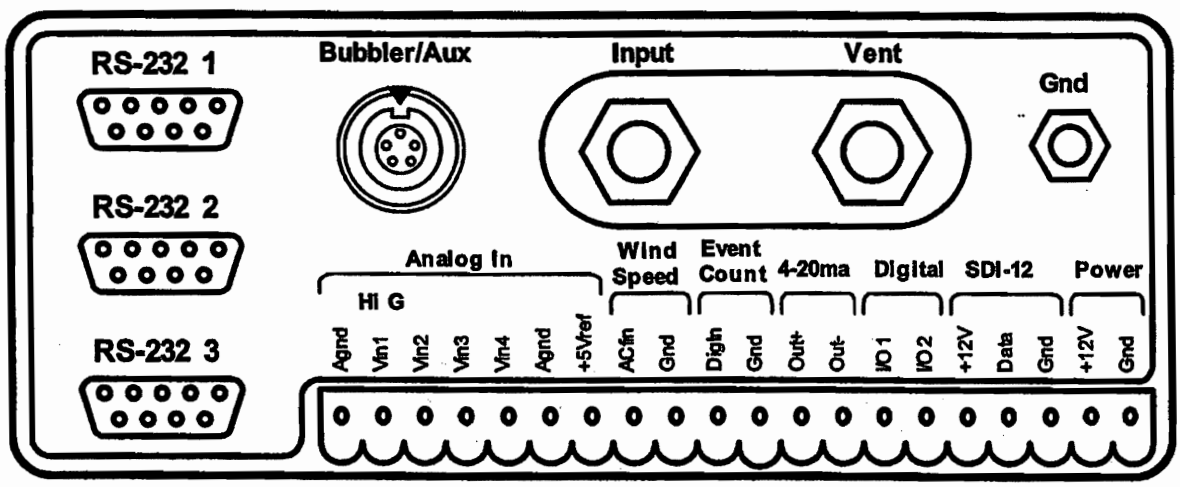

Figure 2-1 H-500XL™ Front Panel Description

2.2.1 Earth Ground Lug

Run a heavy gauge (14awg) wire from the GND lug of the H-500XL™ to the Earth ground of the instrument shelter. If there is no Earth ground, one must be installed. This is most important for the protection of your electronic equipment. It insures the equipment will function properly. (PROPER GROUNDING IS A MUST!)

2.2.2 Pressure Reference Port (Vent) / Pressure Port (Input)

This I/O panel is also used on the H-350XL™. These ports have no function on the H-500XL™.

2.2.3 Bubbler / Aux Port

Figure 2-2 is the Bubbler / Aux communication port, which is a 6-pin connector that interfaces with the H-355 Gas Purge System and other *WATER*LOG® products. The H-500XL™ menu is setup to give the user full control of the H-355 system. This port uses RS-485 hardware for communicating with auxiliary devices. This provides noise immunity and multi drop capability. As other devices are used, the cable will be daisy chained from one device to the next.

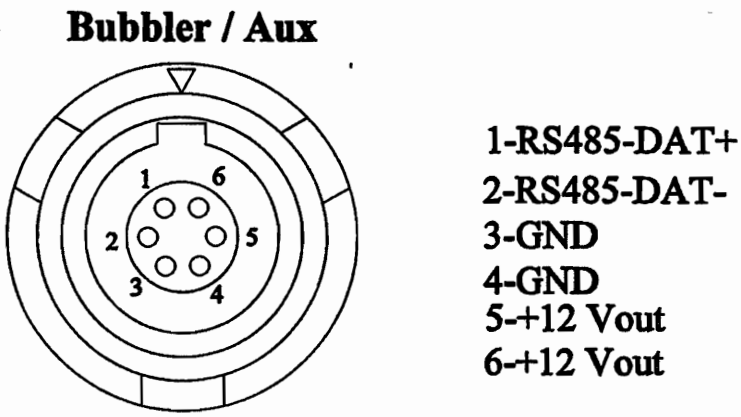

Figure 2-2 Bubbler / Auxiliary Output connector pin out

2.2.4 RS-232 Ports

The three RS-232 ports are used to connect to a PC, GOES Transmitter, modem, remote display, or other piece of serial equipment for standard serial communications. These ports are configured as a DTE type of device. This means they will plug directly into a modem (a DCE type device), but will require a NULL modem adaptor if connected to a PC (a DTE type device). The NULL modem cable crosses the communication lines allowing two similar devices to communicate. Figure 2-3 shows the pin out for all three ports.

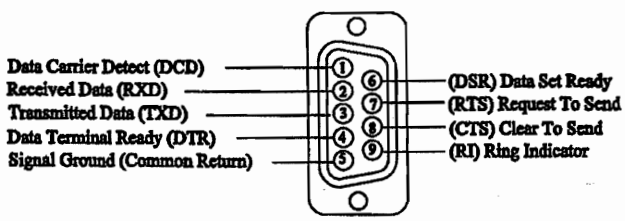

Figure 2-3 RS-232 Connector

SERIAL PORT PIN-OUT		
PIN	DIRECTION	NAME
1	Input	Data Carrier Detect (DCD)
2	Input	Receive Data (RD)
3	Output	Transmit Data (TD)
4	Output	Data Terminal Ready (DTR)
5		Ground (GND)
6	Input	Data Set Ready (DSR)
7	Output	Request To Send (RTS)
8	Input	Clear To Send (CTS)
9	Input	Ring Indicator (RI)

The H-500XL™ uses each port for a specific function. For example the RS-232 port number 2 is used for connecting to a GOES Transmitter. If the GOES Transmitter is connected to any other port, the H-500XL™ will not function with the transmitter because the H-500XL™ will not be able to find the GOES radio. The following table lists each RS-232 port and its usage.

RS-232 PORT	PORT USAGE
RS-232 1	• Direct connection to a PC for command and menu mode operation. • Modem connection allowing remote communications. This includes land line modems, radio modems, CDPD modems, etc.
RS-232 2	• GOES Transmitter connection.
RS-232 3	• Remote display operation. • Auto print operation. • ALERT radio operation.

2.2.5 Analog Input Section

The first seven connections on the twenty pin terminal block are used for analog input functions. This includes four analog inputs, two analog grounds and one +5.00 volt excitation connection.

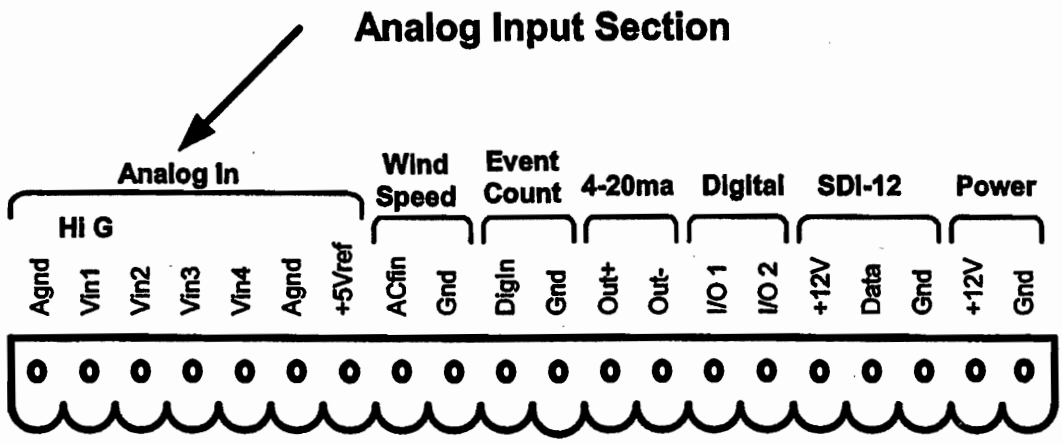

Figure 2-4 Analog Input Section

2.2.5.1 Analog Input Channels

There are four analog input channels labeled Vin1 to Vin4. The standard input range for all channels is 0 to 5 volts. Channel 1 also has extra circuitry to provide high gain, thus allowing a very low input range for sensors that produce millivolt outputs. For example, some solar radiation sensors have a full scale output of less than 10 millivolts. This type of sensor should be used on Channel 1. The optional input range for channel 1 is 0 to 500 millivolts. All analog inputs use a 16 bit analog to digital converter.

2.2.5.2 Analog Grounds

There are two analog ground connection points labeled Agnd. **In order to preserve signal integrity, it is important to use the analog grounds only for sensors connected to the analog section of the H-500XL™.** The current flowing through an analog sensor is relatively small and normally very stable. This provides stable voltages produced by these sensors. If a digital sensor has its ground connection tied into the analog ground, the currents from the digital sensor will flow through the analog circuitry causing voltage level shifts and noise based on digital switching. There are sufficient digital ground connection points for digital sensors.

2.2.5.3 Switched +5.00 Volt Reference Excitation

The +5.00 Volt reference output is used for analog sensors requiring a precision reference voltage. The output current source maximum level is 10 milliamps. Exceeding this limit will cause the excitation to possibly sag, and result in possible data errors. The Analog to Digital converter uses this excitation for its reference in order to provide a ratio-metric relationship for sensors using the excitation. This means that if a sensor causes loading to the excitation and drags it down to 4.75 volts, the A/D converter will use 4.75 volts as its reference, and maintain a full scale input equal to the reduced excitation. To a point this will reduce errors in the data when the excitation is used. If the excitation is being loaded down and some analog input channels are not using the excitation, but produce a voltage output on there own, then these inputs will have a much greater error.

2.2.6 Wind Speed Input (AC Frequency Input)

Pins 8 and 9 of the terminal block provide connection points for a low-level AC signal. Several wind speed sensors produce a low level AC sine wave directly compatible to this input.

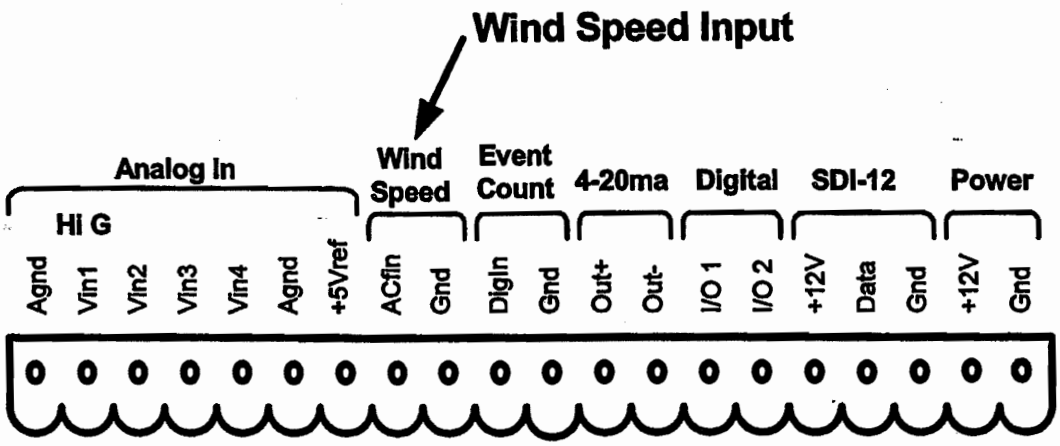

Figure 2-5 Wind Speed Input

The wind speed input is a frequency counter capable of accepting low-level signals in the range of ± 0.075 volts and greater, however, this input should not be exposed to signals greater than approximately ±5.0 volts. The input signal must be bipolar, that is, the input signal must vary above and below the reference point or ground. Several wind speed sensors use a simple propeller driven generator that produces an AC signal suitable for this input.

2.2.7 Event Counter Input

Pins 10 and 11 of the terminal block provide connection points for the digital event counter input.

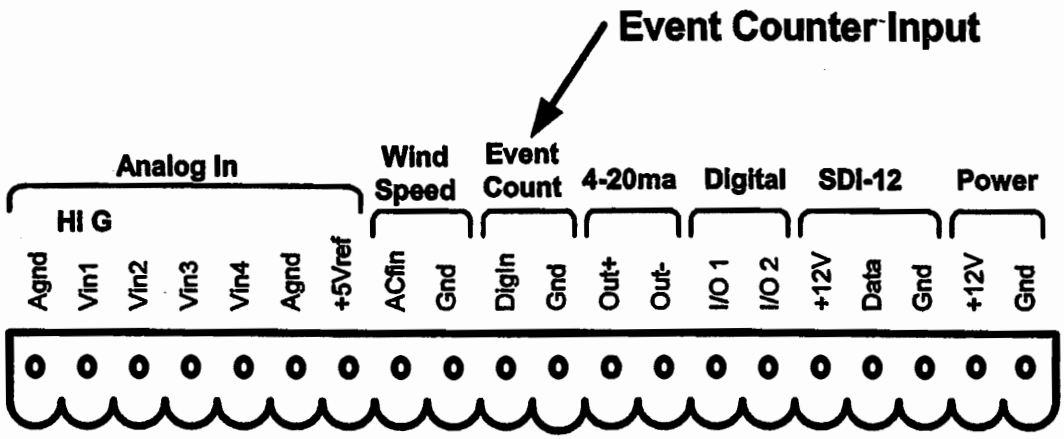

Figure 2-6 Event Counter Input

The counter input is normally used with a tipping bucket rain gauge, however, it can be used for other counter type applications also. Transient protection is provided for this input to prevent damage from static discharge or over voltage conditions. This input is pulled high through a 51K Ohm resistor allowing a switch closure to ground to activate the counter. Figure 2-7 shows a simplified circuit for this input.

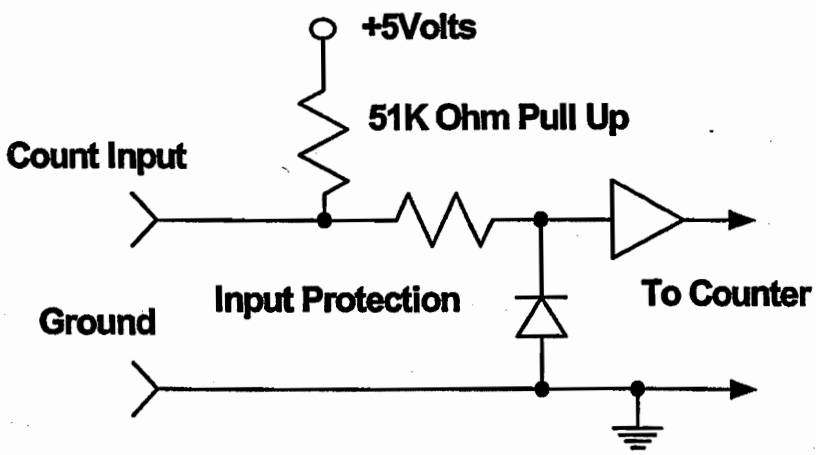

Figure 2-7 Event Counter Circuit

2.2.8 4 to 20 Milliamp Output

Pins 12 and 13 of the terminal block provide connection points for the 4 to 20 milliamp output signal.

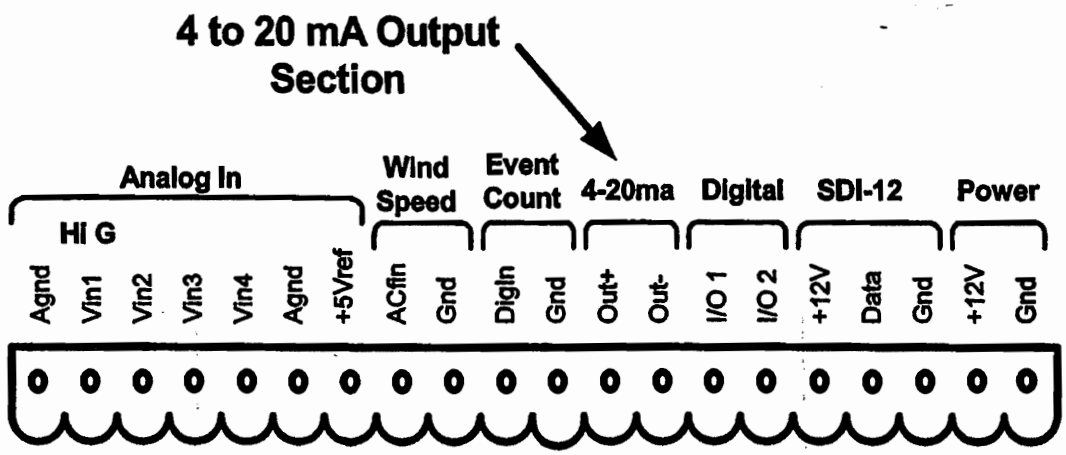

Figure 2-8 4 to 20mA Output Section

Several instrumentation applications use sensors that provide an industry standard 4 to 20 milliamp output signal. The H-500XL™ can output a 4 to 20 milliamp signal based on any of its inputs. For example, a user may want to connect a temperature probe to the H-500XL™ and convert the temperature value into a 4 to 20 milliamp output. A temperature probe on Analog Channel 1 that produces a 0 to 5 volt output representing 0 to 100 degrees Celsius could easily be setup to produce a 4 to 20 milliamp output that represents the 0 to 100 degrees. The H-500XL™ does not actually output a 4 to 20 milliamp signal, but rather controls the current in a loop that is powered externally. Figure 2-9 shows a basic connection diagram.

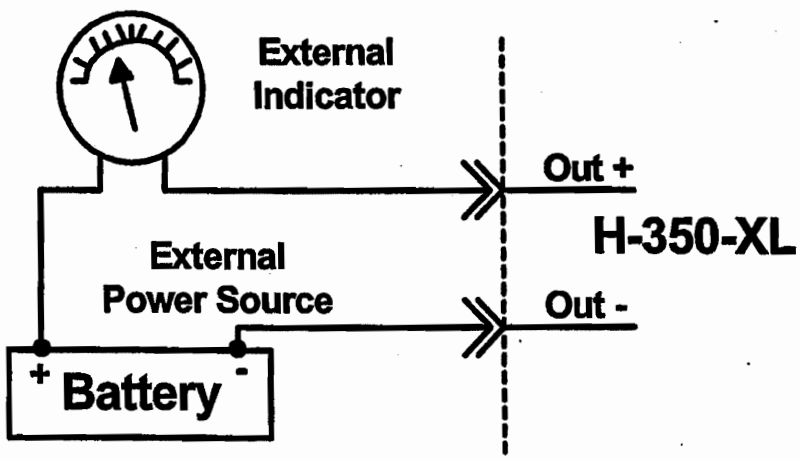

Figure 2-9 Basic 4-20 Wiring Configuration

2.2.9 Digital I/O 1 and 2

Pins 14 and 15 of the terminal block provide connection points for the two digital I/O signals. Notice there is no specific ground point for these signals. Use the digital ground pin of the event counter or the SDI-12 ground. **Do not use the analog grounds.**

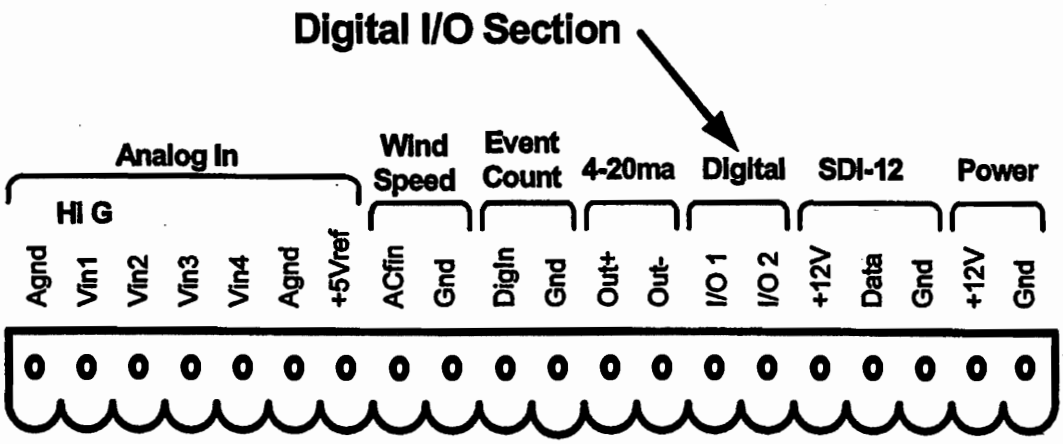

Figure 2-10 Digital I/O Section

The two digital I/O signals can be configured independently as inputs or as outputs. In the input mode, the signal has an internal pull up resistor of 51K Ohms. This allows a switch closure to ground to activate the input. It can also be driven using normal logic levels. As an output, the drive capability is limited by a 100 Ohm protection resistor. The output will still be about 4.0 volts with a 10.0 mA or less load. When both pins are configured as inputs, they may be used as a quadrature shaft encoder input. Figure 2-11 shows a simplified schematic of how these pins are configured.

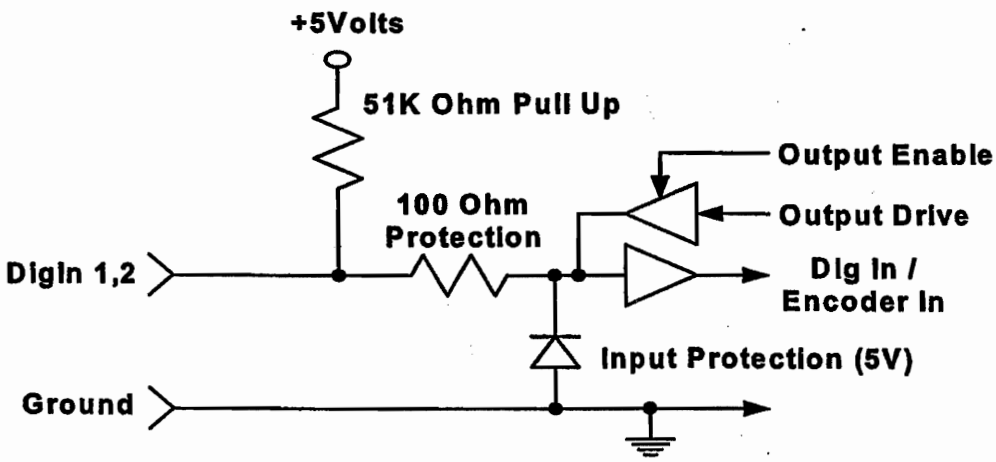

Figure 2-11 Basic Digital I/O Schematic

2.2.10 SDI-12 Section

Pins 16, 17, and 18 of the terminal block provide connection points for SDI-12 senors and data loggers. The H-500XL™ can be used as both an SDI-12 sensor and as an SDI-12 data logger. In either case the connections are made at the same place.

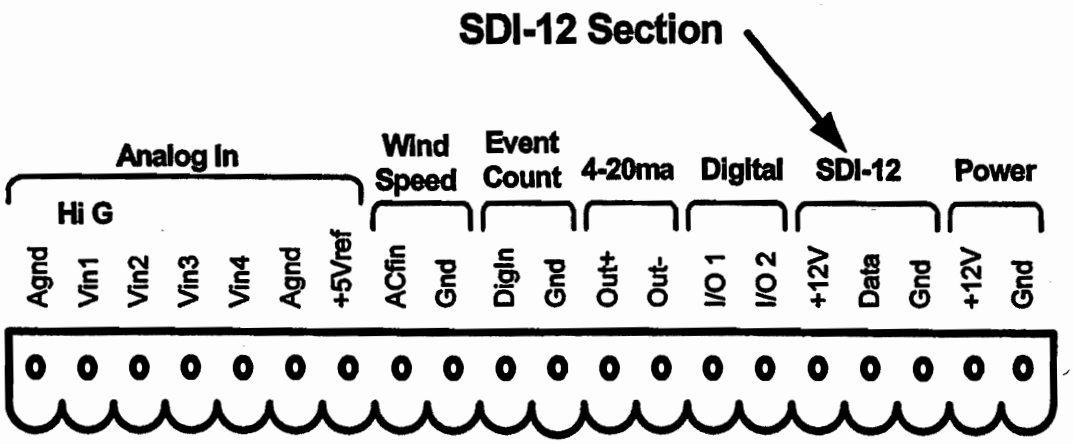

Figure 2-12 SDI-12 Section

If several SDI-12 sensors are to be connected to the H-500XL™, it may be necessary to use external terminal strips to provide enough connection points.

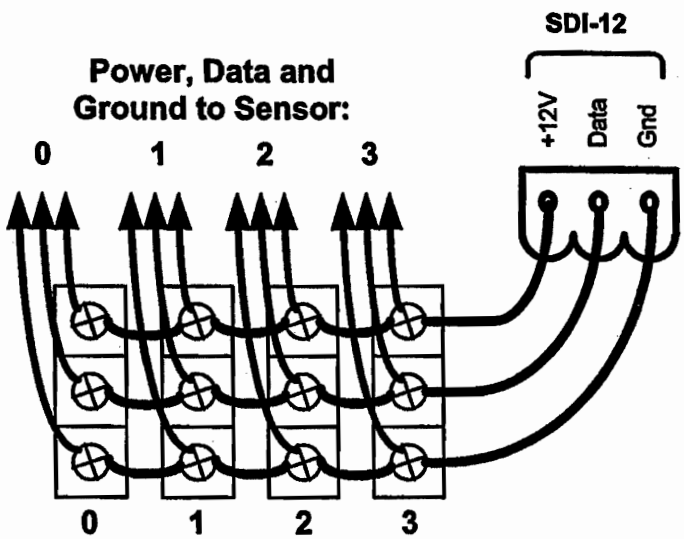

Figure 2-13 SDI-12 Expanded Connector System

2.2.11 Power Connections

The last two pins at the far right of the terminal block provide the main connection points for system power and ground.

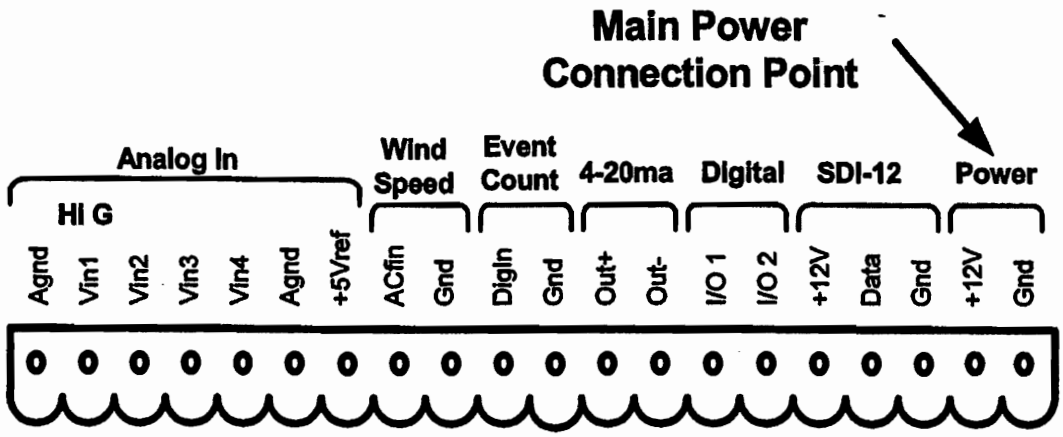

Figure 2-14 Main Power Connection Point

NOTE: When connecting to or removing the wires from these connection points, it is important to remove the terminal block from the H-500XL™ first, or to have the other end of the wires disconnected from the battery. When the screw driver is in the positive power terminal block, it is lined up with the earth ground lug. If power is applied to the unit and the screw driver makes contact with the earth ground lug, a direct short is created between power and ground.

2.3 Testing the Installation

After hooking up the battery, the Power light should begin flashing every 5 to 10 seconds. This indicates that the battery is providing 10 volts or more to the H-500XL™. Press the display On/Off button and the display should come on, indicating the instrument is functional and ready to use.

You will find detailed user setup information and menu options that will allow complete test and verification of all sensor connections and operation in the next two chapters.

Chapter 3
Detailed Operation

3.1 Overview

The H-500XL™ is easy to set up and operate. The built-in display and keypad allow you to examine and edit all of the configuration options. This chapter focuses on the operation of the built-in display and keypad and goes into the in-depth operation of the systems that may only be briefly discussed in other chapters. With a built-in keypad and display there is little need for an external programming device such as a laptop computer, but remote operations are supported as explained in detail in later chapters.

3.2 Modes of Operation

3.2.1 SDI-12 Sensor Mode

The H-500XL™ will respond to SDI-12 commands sent from an external data logger. During normal SDI-12 communication, an external data logger issues commands to the sensors attached to the SDI-12 data line. The command includes the address of the sensor it is trying to communicate with and a command for the sensor to perform. All sensors attached to the bus will wake up and receive the command, but only the sensor that has a matching address will respond to the command from the data logger and all other sensors will return to a low power sleep mode. Details on the SDI-12 commands and responses supported by the H-500XL™ can be found in Appendix B of the manual. When used as an SDI-12 sensor, the main setup options that may need to be changed are the sensor address and the data being sent back to a data logger. In several applications the H-500XL™ can be used as a sensor 'out of the box'. The H-500XL™ can also operate as a sensor and a data logger simultaneously.

3.2.2 Operation as a Data Logger or DCP

This mode of operation allows the H-500XL™ to log data at a user-defined time interval. The data is stored internally in non-volatile memory. There are several ways to retrieve data from the H-500XL™.

- The data can be copied to an industry standard ATA FLASH Memory Card.
- The data can be downloaded through the serial port of the H-500XL™ to the hard disk of a PC (via direct connection or modem connection).
- Data can be transmitted through the GOES system for near real time operation.

The data recorded to the internal memory is stored as ASCII text with a tabular format ready to be imported into spreadsheets, word processors, decodes, etc. The H-500XL™ can operate as a sensor and a data logger simultaneously.

3.2.3 Operation Using Auxiliary Outputs

The H-500XL™ can also be setup to provide various outputs based on any of the sensor input values. The H-500XL™ can be configured as a 4 to 20 mA sensor. This allows the H-500XL™ to be compatible with industrial equipment that does not support SDI-12. The serial port outputs of the H-500XL™ enable it to operate with a GOES Transmitter, a data or voice modem, an ALERT radio, etc. The Digital I/O may also be configured as outputs to drive external devices through a relay, or to simulate a quadrature shaft encoder.

3.2.4 Operation with the H-355 Gas Purge System (Bubbler)

The H-355 is a self-contained gas purge system designed to replace mechanical gas purge systems (Nitrogen tank and Conoflow). The H-500XL™ interfaces with the H-355 via the RS-485 connector marked **Bubbler/Aux** on the front panel. The H-500XL™ is used to adjust the operating parameters of the H-355. Refer to Chapter 6 in this manual and to the H-355 manual for a detailed description of the H-355 operation.

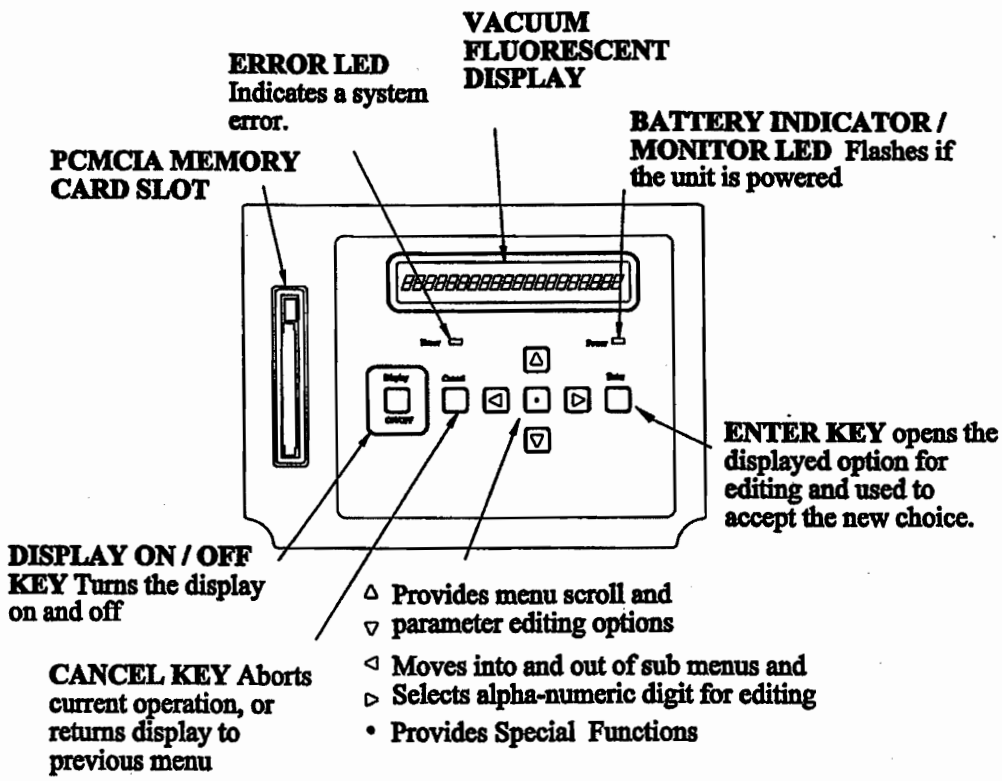

Figure 3-1 The H-500XL™ Keypad and Display

3.3 Keypad/Display Operation

The H-500XL™ can be fully configured using the built-in keypad and display. The operating system allows the user to easily move through the different menus using the ARROW keys. Changes are made using the ENTER key and the ARROW keys. Most operating changes are made from pick lists of valid options. Figure 3-1 shows an illustration of the keypad and display of the H-500XL™ with the lid opened.

POWER LED
The Power light flashes on and off to show that the H-500XL™ is receiving proper +12V power. If the power source has failed or provides less than +10V, the power light stops flashing. This is a visual indication that the system battery is low.

ERROR LED
The Error light is not used at this time.

MEMORY CARD SLOT
The memory card slot accepts an industry standard ATA PCMCIA FLASH Memory Card. When operated as a logger, the H-500XL™ stores data internally. The data can be transferred from the internal memory to an ATA FLASH Memory Card for use in computers that have PCMCIA support. Most laptop PC's have PCMCIA support built into them, and desktop PC's can be equipped with PCMCIA card readers. PCMCIA card readers are available at most PC outlets or from Design Analysis. All H-500XL™ firmware updates are loaded from an ATA FLASH Memory card through this memory card slot.

ON / OFF Key
The ON/OFF key is used to turn the display on and off. This key will only turn the display off from the top level of the menu system. If the unit is on and in a submenu, then this key, much like the CANCEL key will cause the next higher menu to be displayed until at the top level, at which time, pressing the ON/OFF key will turn the display off.

If the unit does not respond to a key press, it may be in the process of measuring. Wait a few seconds and try again.

To save power, the H-500XL™ display will turn off automatically after **five minutes** of inactivity.

ENTER Key
The ENTER key has four functions:

I. Pressing the ENTER key while displaying a status screen like "Rain = 2.45" or "Temp = 23.65" will cause the H-500XL™ to make a new measurement of the selected input and update the screen with the new reading.

II. The ENTER key acts as a "YES" key on screens that are looking for a yes or no response. For example, pressing the ENTER key on the "Erase Data ?" screen will cause the erase process to start, but pressing the CANCEL key will abort the option. Once the process is started by pressing the ENTER key, there is normally no way to stop the action, it must run to completion.

III. The ENTER key starts the edit process for fields that can be modified or changed. These fields are surrounded by brackets ([Option]). For example, the "Logging [Off]" option can be changed to either "[On]" or "[Off]." Pressing the ENTER key starts the process and the text between the brackets starts to flash. Use the arrow keys to make the desired changes.

IV. The ENTER key is used to accept edits or changes. For instance, if you changed the Cnt Interval from [Daily] to [Hourly], you would press the ENTER key to accept this change, and the selection would stop flashing.

CANCEL Key

This key has three main functions:

I. The CANCEL key works the same as the Escape key does on your computer. For example, if you are editing an option and decide not to make a change, pressing the CANCEL key would abandon the changes.

II. The CANCEL key also works as a "HOME" key. If you are in a sub-menu and wish to return to the previous menu, press the CANCEL key. Pressing the CANCEL key several times will always take you to the beginning menu.

III. The CANCEL key acts as a "NO" key on screens that are looking for a yes or no response. For example, pressing the CANCEL key on the "Erase Data ?" screen will abort the option, but pressing the ENTER key will start the erase data option.

ARROW Keys

The UP, DOWN, LEFT, and RIGHT ARROW keys (◂ ▸ ▴ ▾) have the following functions:

I. The ▴UP and ▾DOWN ARROW keys enable you to scroll from one menu to another. When you reach the bottom screen, the ▾DOWN ARROW key will no longer work. When you are at the top screen, the ▴UP ARROW key will no longer work.

II. When moving through the menus, the ◂LEFT and ▸RIGHT ARROW keys allow you to move into and out of sub menus. Screens that have an arrow (->) on the right side of the display have sub menus.

III. The ◂LEFT and ▸RIGHT ARROW keys let you move the cursor back and forth across the field when editing a numerical value such as the slope or the offset. The digit or blank space will flash to let you know where the cursor is within the field.

When editing numerical or character options, the ▲UP and ▼DOWN ARROW keys also let you increase or decrease the flashing digit or letter by one. They also toggle the "+" and "-" signs.

IV. The ▲UP and ▼DOWN ARROW keys enable you to scroll through the options within a menu. For example, if you want to change the H-500XL™ logging option from [Off] to [On], start the editing process by pressing the ENTER key, and then use the ▲UP and ▼DOWN ARROW keys to cycle through the list of options. When in the editing mode, all or part of the text between the brackets " [Option]" will be blinking. Once the desired option is displayed, press the ENTER key again to accept the change and the blinking will stop with the new option displayed.

DECIMAL Key

When editing an option screen where there is a pick list of multiple valid options, the DECIMAL key lets you toggle between the first and last option on the list. This is very useful when you want to select an option near the bottom of a large list.

DISPLAY

The 1 line by 20 character display is used to view and edit all of the menu items. The user can move through the menu screens using the ARROW keys. Each screen represents a unique menu item. There are four main types of menu screens: status screens, sub menu header screens, option screens, and table screens.

STATUS SCREENS

Status screens display information, and are not changeable by the user. The system will automatically update some status screens, like the battery voltage screen. As the battery voltage level goes up and down the displayed value goes up and down automatically.

```
Battery = 12.34 Volts
```

There are a few status screens the user can have the system update. A screen that shows the rain value may be displaying a value that was measured several minutes earlier. Pressing the ENTER key will cause the system to take a new measurement and display the new value. When the ENTER key is first pressed the display will show the following screen indicating the ENTER key was acknowledged, and a measurement is in process.

```
Scanning ...
```

The updated rain value will be redisplayed once the measurement is complete.

```
Rain = 10.75
```

SUB MENU HEADER SCREENS

Screens that have an arrow (->) on the right side indicate a sub menu header screen. The sub menu may be entered by pressing the ▸RIGHT ARROW key. There may be several levels in a sub menu. The sub menus will relate to the header screen text, for example the sub menu options of the main menu header screen "Scanning Options" will relate to the scanning process.

Scanning Options ->	Scanning [Off]
	Scan Rate:[HH:MM:SS]

OPTION SCREENS

Screens with brackets ([Option]) surrounding the option are option screens. The user can edit or change the option which will always be shown between the brackets. In some cases the option inside the brackets will be several characters but the editing process will only change one character at a time, for example a time or date value.

```
Time [12:34:42]
```

In this case pressing the ENTER key will start the editing process and one of the characters in the brackets will be blinking. Use the ▴UP and ▾DOWN ARROW keys to change the blinking character and the ◂LEFT and ▸RIGHT ARROW keys to move to another character. Press the ENTER key to accept the new values or the CANCEL key to keep the original values.

In other cases, all of the text between the brackets will flash, and the ▴UP and ▾DOWN ARROW keys are used to select a valid option from a list specific for that function.

```
Baud Rate  [9600]
```

In this case pressing the ENTER key will start the editing process and the text "9600" will start blinking. Use the ▴UP and ▾DOWN ARROW keys to change between valid choices of 19200, 9600, 4800, 2400, 1200 or 300 baud, or use the DECIMAL key to toggle between the first and last option of the list. Again, press the ENTER key to accept the new value or the CANCEL key to stay with the original value. For these type of options, invalid entries are not possible.

TABLE SCREENS

Some complex screens look like both option screens and sub menu header screens, these screens are table screens. For example, the following table shows the menus used to define the logging options in a table format.

Source 1 [Date]->	Source 2 [Date]->	...	Source 25 [Date]->
Header 1[ ]->	Header 2[ ]->	...	Header25[ ]->
Skip Rate 1 [01] ->	Skip Rate 2 [01] ->	...	Skip Rate 25 [01] ->
Digits 1 [2] ->	Digits 2 [2] ->	...	Digits 25 [2] ->
Col 1 Fn() [NOW]->	Col 2 Fn() [NOW]->	...	Col 25 Fn() [NOW]->

When in the table, using the ◂LEFT and ▸RIGHT ARROW keys moves through the table horizontally. The ▴UP and ▾DOWN ARROW keys move through the table vertically. The ENTER key is used to start and end the editing process as before. While moving through the table, pressing the CANCEL key will take the system back to the sub menu screen used to enter the table.

3.4 Familiarization

The best way to become familiar with the system is to explore the system options and features. Turn the unit on, move through the menus, and make changes to some options to see how the editing functions work. Do not worry about mis-programming the unit, the "Reset Defaults" option will change the settings back to what they were when the unit left the factory.

3.5 Main Menu Description

The tables on the following pages show the main menu structure of the H-500XL™. The main menu includes status screens that allow the user a quick view to sensor data. The main menu also includes sub menu headers that separate the operating options for the H-500XL™.

Label = Value
Sensor Input Setup->
Output Options ->
Data Options ->
Scan Setup ->
System Setup ->
System Status ->
Accessory Setup ->

This table represents the main menu options. The user can easily move through these menus using the ▴UP and ▾DOWN ARROW keys. Pressing the CANCEL key repeatedly will cause the system to return to the top of this menu structure.

The first screen shown here represents a user definable status screen. There are 5 user definable status screens. These screens are initially disabled and are not visible.

Menu items with the pointer (->) on the right side of the screen have a sub menu related to the displayed menu. Use the ▸RIGHT ARROW key to move into the sub menu.

Use the CANCEL key or the ◂LEFT ARROW key to return from the sub menu to the header screen in the main menu.

[illegible]
Sensor Input Setup->
Output Options ->
Data Options ->
Scan Setup ->
System Setup ->
System Status ->
Accessory Setup ->

The H-500XL™ has five user definable status screens that are initially disabled. The user may define a label and a data source for each status screen. For example, the user could define a label as "Rain(in)=" and then define the data source as "Counts." This screen would then be the new home screen, followed by any other status screens that have been enabled. An option under "System Setup" allows the user to define how these screens will appear. This will be discussed in detail in a later section in this chapter.

Rain(in)= 2.45
[illegible]
Output Options ->
Data Options ->
Scan Setup ->
System Setup ->
System Status ->
Accessory Setup ->

The "Sensor Input Setup" screen is a sub menu header screen as indicated by the arrow (->). This screen is considered the "home" screen unless one or more user definable status screens are enabled. Pressing the ▸RIGHT ARROW key will cause the system to enter into the sub menus related to all the sensor input setup options for the H-500XL™. This includes defining the analog inputs, counter input, etc.

Rain(in)= 2.45
Sensor Input Setup->
[illegible]
Data Options ->
Scan Setup ->
System Setup ->
System Status ->
Accessory Setup ->

The "Output Options" screen is a sub menu header screen. The sub menu options allow the user to indicate what to do with the data once it is measured. The data can be saved to internal memory, sent to a GOES transmitter, sent to a printer or terminal through the serial port, or converted to a 4 to 20 mA signal and sent to other types of control equipment.

Rain(in)= 2.45
Sensor Input Setup->
Output Options ->
[illegible]
Scan Setup ->
System Setup ->
System Status ->
Accessory Setup ->

The "Data Options" screen is a sub menu header screen. The sub menu options allow the user to erase data, copy data to an external data card, view the data file, and see how many free bytes are still left in data memory or on the data card.

Rain(in)= 2.45
Sensor Input Setup->
Output Options ->
Data Options ->
[illegible]
System Setup ->
System Status ->
Accessory Setup ->

The "Scan Setup" screen is a sub menu header screen. The sub menu options allow the user to enable and disable scanning and define how often to scan the connected sensors.

NOTE: Scanning is the heart of the system. All major operations are based on scanning being enabled. For example, logging, GOES radio operations, ALERT radio operations, and several others will only happen if scanning is enabled.

Rain(in)= 2.45
Sensor Input Setup->
Output Options ->
Data Options ->
Scan Setup ->
[illegible]
System Status ->
Accessory Setup ->

The sub menu options under this heading are used to set generic system options like the time of day, date, serial port settings, etc.

Rain(in)= 2.45
Sensor Input Setup->
Output Options ->
Data Options ->
Scan Setup ->
System Setup ->
[illegible]
Accessory Setup ->

The sub menu options under this heading are used to view how the system is operating; if there have been unexpected resets, battery voltage levels, etc.

Rain(in)= 2.45
Sensor Input Setup->
Output Options ->
Data Options ->
Scan Setup ->
System Setup ->
System Status ->
[illegible]

The sub menu options under this heading allow the user to control accessory products connected to the H-500XL™ such as the H-355 Bubbler system.

3.6 Sensor Input Setup Options

The following menu structure represents all the sub menus under the "Sensor Input Setup" header. These sub menus allow you to change the mode of operation and coefficients used to compute the final data value for the different sensor inputs. These options include defining slopes and offsets for the analog inputs, the frequency input, the counter input, the digital I/O, etc. There are also options for communication with SDI-12 sensors for test and configurations purposes. Note: a field containing X's represents a measured value, and all other fields show the factory default settings.

Sensor Input Setup->	Counter Setup ->	Counts [X.XXX]
		Total Cnt [X.XX]
		Reset Counters ?
		Ctr Slp[0.0100]
		Cnt Interval [Daily]
		Ctr Mode [Off]
	Analog 1 Setup ->	Analog 1 = X.XXXX
		Offset [0.0000]
		Slope [1.0000]
		Range [5.0 V]
	Analog 2-4 Setup ->	(Same as Analog 1)
	Frequency Setup ->	Frequency = X.XXX
		Freq Slp[1.0000]
		Freq Ofst[0.0000]
	Dig I/O 1 Setup ->	Digital I/O 1 = 1
		Mode [Digital Input]
		Trg Fnt[0]
		Pulse Length [1000]
		WarmUp Delay [250]
	Dig I/O 2 Setup ->	(Same as Dig I/O 1)
	Encodr Input Setup->	Quad Input [X.XXX]
		Quad Slp[0.0100]

Continued On Next Page

SDI Transparent ->	SDI-12 Test Adrs[0]
	Send Ack Cmd?
	Send ID Cmd?
	Send Verify Cmd?
	Send Measure Cmd?
	Send Data 0 Cmd?
	Send Extended Cmd?
	Ext Cmd[0]
H-310 Setup ->	SDI-12 Test Adrs[0]
	H310 Stage [X.XX]
	H-310 Units [PSI]
H-330 Setup ->	SDI-12 Test Adrs[0]
	H330 Stage [X.XX]
	H-330 Units [Ft CW]

3.6.1 Counter Setup

The counter input was intended for use with a tipping bucket rain gauge, but can be used with any sensor that acts as a switch closure or produces a 0 to 5 volt pulse. Two counter values are derived from the single counter input, a total count value (Tot Cnt) and an interval count value (Counts). The counters WILL NOT be reset to 0 when scanning is enabled, but will maintain any preset value.

Sensor Input Setup->	Counter Setup ->	Counts [X.XXX]
		Tot Cnt [X.XX]
		Reset Counters ?
		Ctr Slp[0.0100]
		Cnt Interval [Daily]
		Ctr Mode [Off]

Counts [X.XXX]
This screen displays the total counts for the current interval, daily, hourly, etc. The default interval is 'Daily' but can be set to hourly or based on every scan. When set to daily this counter will get reset to 0.00 at the beginning of each day. If set to hourly then it will get reset to 0.00 at the top of each hour. If set to each scan then the value will be reset after each scan. This option is also used to enter an initial or offset value. The count value is scaled based on the counter slope or multiplier. This value is not reset automatically when scanning is enabled, and should be set by the user to a starting value.

Total Cnt [X.XX]
This screen displays the total count value since scanning was enabled. This option is also used to enter an initial or offset value. The total count value is also scaled based on the counter slope. As with the count value, this value is not reset automatically when scanning is enabled, and should be set by the user to a starting value.

Reset Counters ?
This option gives the user the ability to manually reset both counters to 0.00.

Ctr Slp[0.0100]
This option allows a slope value to be entered that represents the value of each count. The default value is 0.01 so that when connected to a tipping bucket rain gauge each tip or count is equal to 0.01 inches of rain. This is one of the most common uses for this input.

Cnt Interval [Daily]
This option screen allows the user to select the count interval which will determine how often and when the interval counter will reset automatically to 0.00. The default interval value is "Daily", but can also be set to "Hourly" or "Scan." When the count interval is set to "Daily" which is the default, then the counts value is the number of counts since midnight. The counter will automatically reset to 0.00 every midnight after all scanning and report processes have completed. When set to "Hourly", the counts value is the number of counts since the top of the last hour. If set to "Scan", it is the number of counts since the last scan.

Ctr Mode [Off]
This option screen allows the user to select the counter mode. The default counter mode is "Off." Other valid options are "Count Only" or "Cnt & Txd". If set to "Off," the counters will be disabled. If set to "Count Only," both counters will be enabled. If set to "Cnt & Txd," the counters will be enabled and if the ALERT radio is enabled, the system will see if an ALERT transmission should be sent based on the count value. Once enabled, the counters will be active even if scanning is turned off.

3.6.2 Analog 1 - 4 Setup

The four generic analog input channels are configured as single ended inputs with a range of 0.0 to 5.0 volts. Channel 1 also has a 0.0 to 500 mV range for sensors that produce a low level

output voltage. A 5.0 volt switched excitation is also provided for sensors that require power. The analog setup screens allow for simple conversions from voltage to some other value using a slope and offset. The voltage from the input is multiplied by a slope value and then added to an offset value, Value = Volts * Slope + Offset.

Sensor Input Setup->	Analog 1 Setup ->	Analog 1 = X.XXXX
		Offset [0.0000]
		Slope [1.0000]
		Range [5.0 V]

Analog 1 = X.XXXX
This screen gives real time converted values for the analog channel. If a temperature probe is connected and the coefficients are set to convert volts to temperature, the value displayed would be temperature.

Offset [0.0000]
This option screen allows the user to enter an offset value. The default value is 0. This is the final term in the equation: Value = Volts * Slope + Offset.

Slope [1.0000]
This option screen allows the user to enter the slope (or multiplier) value that will be applied to the measured voltage in order to convert the value to some meaningful data. This is the first term in the equation: Value = Volts * Slope + Offset.

Range [5.0 V]
All four analog input channels have a 0.0 to 5.0 Volt input range. Channel 1 can also be set to a 0.0 to 500mV range for sensors that produce a maximum output voltage less than 500 mV.

Analog Input Setup Example
If a temperature probe with a 0 to 5 volt output that represents a -40 to +60 degrees C swing is to be used, what should the analog setup values be?

The slope would be calculated as follows:

$$\text{Slope} = \frac{\text{Max Value - Min Value}}{\text{Max Volts - Vin Volts}} = \frac{60 - (-40)}{5 - 0} = \frac{100}{5} = 20$$

The offset in this case would be set to the minimum value of -40.0 calculated using some known values, offset = temp - (slope * volts). At a voltage of 5 volts the temperature is 60 degrees, offset = 60 - (5 * 20) = -40.0. At a voltage of 0 volts the temperature is -40.0, offset = -40 - (0 * 20) = -40.0.

The actual equation would be: Degrees C = Volts * 20 - 40.

The input voltage range would be set to the 5 volt range.

3.6.3 Frequency Setup

The AC frequency input accepts low level AC signals such as those produced by several wind speed sensors. These sensors typically produce a signal in the range of 0.15 volts peak to peak centered around 0.00 volts.

Sensor Input Setup->	Frequency Setup ->	Frequency = X.XXX
		Freq Slp [1.0000]
		Freq Ofst [0.0000]

Frequency = X.XXX
This screen gives real time converted values for the frequency input channel. If a wind speed sensor is connected and the coefficients are set to convert frequency to wind speed, the value displayed would be the wind speed.

Freq Slp [1.0000]
This option screen allows the user to enter the slope (or multiplier) value that will be applied to the measured frequency in order to convert the value to some meaningful data. This is the first term in the equation: Value = Frequency * Slope + Offset.

Freq Ofst [0.0000]
This option screen allows the user to enter an offset into the frequency calculation. This is the final term in the equation: Value = Frequency * Slope + Offset.

NOTE: The offset is only used if the raw frequency is not 0.00. This prevents a true wind speed of 0.00 as being displayed as a small value equal to the offset.

3.6.4 Dig I/O Setup

The digital I/O options are very flexible, allowing them to be used for a wide range of applications that require a status input or a control output. These pins are also used for the simulated quadrature shaft encoder output or the quadrature shaft encoder input. Below is a table showing the Digital I/O options. The setup for Dig I/O 1 and Dig I/O 2 are the same.

Sensor Input Setup->	Dig I/O 1 Setup ->	Digital I/O 1 = 1
		Mode [Digital Input]
		Trg Fnt[0]
		Pulse Length [1000]
		WarmUp Delay [250]

Digital I/O 1 = 1
This screen gives the current state of the digital I/O pin. If the pin is configured as an input, the value will be a 1 or a 0 meaning "On" or "Off" respectively. If it is a 1, the input voltage will be approximately 3.5 volts or higher. If it is a 0, the input voltage will be approximately 0.8 volts or less. The range between 0.8 and 3.5 is not defined and may be either a 1 or a 0. If the pin is configured as an output, the value will be a 1 or a 0 based on whether the output is set to a 1 or a 0, "On" or "Off" respectively. However, the output may be set to a 1 or a 0, but the connected equipment may prevent the output from going to the desired state if it is causing too great a load on the output. In this case the reported value matches the desired state and **not** the actual state. Other functions for this screen are available based on the mode of the I/O pin as listed below.

When Configured As An Input
Pressing the ENTER key will display "Digital Input Mode", indicating the current pin configuration is an input.

When Configured For Triggered Continuous Output
Pressing the ENTER key will toggle the output from a 1 to a 0 or from a 0 to a 1 based on the current state of the output.

When Configured For Triggered Pulsed Output
Pressing the ENTER key will cause the output to pulse on and then turn off. The duration of the pulse is set using the "Pulse Length" option. This value is in milliseconds so the pulse length will be between 1 mS and 9.999 seconds.

When Configured For On For Scan
Pressing the ENTER key will toggle the output as in the triggered continuous output mode.

Mode [Digital Input]
There are four main modes for the digital I/O pins. Each I/O pin can be individually configured as an input or an output. The exception is the quadrature shaft encoder input mode. When using the quadrature input mode, both pins must be set to "Digital Input" mode.

"Digital Input" Input Mode
The selected pin is used as a digital input. This would be used to test the status of an external device, such as a motor. The digital I/O pin would be used as the source for data in the logging report options; a 1 would be stored if the motor was on, or a 0 would be stored if the motor was off.

"Trigger Cont." Triggered Continuous Output Mode
The selected pin is configured as an output that will turn on and off based on a user defined trigger condition. The output will stay on until the condition goes away. For example, if a pump was to be turned on if it had rained more than 1 inch during the last interval, the user would set the trigger condition to "counts>1.0." The digital I/O and the counts must both be used as sources in the logging options in order to tell the system when to evaluate the trigger condition. The logging options would be set to log Date, Time, Counts, and Dig I/O 1. As the unit turned on to scan the sensors, it would log the date and time, record the rain level (counts), and then evaluate the trigger function. If the trigger condition were true, the output would turn on and a '1.0' would be logged in the data file. The output would stay on until the next scan, at which time it would be reevaluated to see if it should stay on or be turned off. If on the next scan the rain level during the last interval (counts) was less than 1.0, the digital I/O would be turned off and a '0.0' would be logged to the file.

"Trigger Pulse" Pulsed Output Mode
The selected pin is configured as an output that will pulse on and off based on a user defined trigger condition. Continuing with the last example, if a warning horn was to sound at each scan the rain level for the last interval (counts) was greater than 2.0 inches, the user would set the trigger condition to "counts>2.0." The digital I/O and counts must both be used as data sources in the logging options in order to tell the system when to evaluate the trigger condition. The logging options would be set to log Date, Time, Counts, Dig I/O 1, and Dig I/O 2. As the unit turned to scan the sensors it would log the date and time, record the rain level (counts), test Digital I/O 1, and then evaluate the trigger condition to see if the rain level during the last interval (counts) was greater than 2.0 inches. If the trigger condition was true, the output would pulse for the time set in the "Pulse Length" option. The output would pulse after each scan the rain level for the last interval was greater than 2.0 inches.

"On For Scan" On At Scan Time Mode
The selected output will turn on at the beginning of each scan and delay the scanning process for a time specified by setting the "WarmUp Delay" option. After the warm up delay, the normal scan process will continue. This would be used for applications that require an external device to be turned on for every scan such as a motor or a pump. At the end of the scan the output will be turned off. This Digital I/O does not have to be used as a data source in the logging options in order to turn on and off.

Trg Fnt[0]
This option screen allows the user to view and edit the conditional statement used to determine if the digital I/O pin should be set high when the selected digital I/O is configured as a triggered output. By pressing enter, the user begins the editing process. The flashing cursor will indicate the character position that may be edited. The user can use the RIGHT and LEFT ARROW keys to change to cursor position, and the UP and DOWN ARROW keys to change the blinking character.

This statement is normally a logical expression that is true or false . For example, "ana1>10.0" would equate to true if the value for analog channel 1 was greater than 10.0 and would equate to false if it was less than 10.0. Logical expressions return a value of 1.0 if true and 0.0 if false. If the conditional statement is true the output will be triggered, (set or pulsed high).

The trigger condition is actually true for any value that is greater than 0.0 and is false for any value that is 0.0 or less. This allows for standard math expressions to also be used for the trigger condition. For example, if a temperature probe was connected to analog channel 1 that measured temperature in degrees Fahrenheit, a math equation like "(ana1-32)*(-1)" could be used to turn on a heater any time the temperature was below 32 degrees F. Any time the temperature was at or above freezing (32 degrees) the result of the equation would be zero or negative and the condition would be considered false, however, if the temperature was below freezing, the result would be positive and the condition would be considered true.

The conditional statement can be up to 48 characters long and can be based on multiple conditions as shown in the next example: "(ana1>10.0)&(counts>0.05)". In this example the value for analog channel 1 must be greater than 10.0 **AND** the count input (normally rain fall) must be greater than 0.05 for the condition to be considered true.

If the conditional statement needs to be greater than 48 characters, the user may enter one of the 40 user definable functions as the conditional statement and enter the real conditional statement in the selected user defined function. Detailed instructions for editing the conditional statement and the user definable functions using the PC menu mode interface are found in chapter 4 of the manual under the "Functions Menu" header explaining the "User Definable Functions" and the "Math" operations of the H-500XL™.

The default statement for this option is '0' which basically disables the trigger.

Pulse Length [1000]
This option sets the pulse duration of the output when the mode is set to "Trigger Pulse." This value is in milliseconds, and the value can range from 1 millisecond to 9.999 seconds. The default value is 1000 milliseconds (1 second).

WarmUp Delay [250]
When the mode is "On For Scan," the warm up delay sets a time delay between when the output goes high and when the scan process continues on. This pauses the scanning process to allow for sensors to warm up or stabilize for proper operation with the H-500XL™. This value is in milliseconds, and the value can range from 1 millisecond to 9.999 seconds. The default value is 250 milliseconds.

3.6.5 Quadrature Shaft Encoder Input

The H-500XL™ uses the two digital I/O pins to connect to a quadrature shaft encoder. The two digital I/O lines use an internal 50K ohm pull-up resistor. For proper operation with a shaft encoder that increments clockwise, the phase A signal should be input into pin 1 and the phase B signal should be input into pin 2.

Sensor Input Setup->	Encodr Input Setup->	Quad Input[X.XXX]
		Quad Slp[0.0100]

Quad Input[X.XXX]
This option screen is first used to view the current position of the shaft encoder. This menu is also used to edit the encoder value, or enter an initial or offset value. Pressing the ENTER key will cause one character to start flashing, use the ARROW keys to edit the value as needed and then press the ENTER key to accept the new value. The internal counter can count ±32767 counts. When a new value is entered, the internal counter is reset allowing the counter to count ±32767 counts from the new value, not from zero.

Quad Slp[0.0100]
This option screen allows the user to enter a slope (or multiplier) value that is applied to each count in order to calculate the final quad value. The default slope is 0.01. Most shaft encoder's produce 100 counts per revolution, so a slope of 0.01 will equate to 1.00 for one revolution. When using a pulley with a 1 foot circumference, each count is 0.01 foot of change and one revolution is one foot of change.

NOTE: When the digital I/O are used for shaft encoder input they cannot be used as outputs.

3.6.6 SDI Transparent

The SDI-12 Transparent options allow the user to talk directly with SDI-12 sensors. This mode allows the user to setup, test, and control SDI-12 sensors. All SDI-12 sensors must implement a set of standard commands. When using the H-500XL™ these standard commands can be sent to a sensor using a single key press. Extended commands specific to each sensor may also be sent to a sensor, but the user must enter these commands based on the sensor manufactures requirements.

Sensor Input Setup->	SDI Transparent ->	SDI-12 Test Adrs [0]
		Send Ack Cmd?
		Send ID Cmd?
		Send Verify Cmd?
		Send Measure Cmd?
		Send Data 0 Cmd?
		Send Extended Cmd?
		Ext Cmd[0]

SDI-12 Test Adrs [0]
This option sets the SDI-12 address that the H-500XL™ will use to communicate with the SDI-12 sensors. This allows for the standard SDI-12 commands to be sent as single key press. This is not to be confused with the option that sets the SDI-12 address of the H-500XL™ when it is used as a sensor.

Send Ack Cmd?
Pressing the ENTER key causes the SDI-12 Acknowledge command "a!" to be sent to the sensor using the address defined above. The sensor's response is displayed on the screen. If there are any errors, a time out message is displayed. A detailed description of the SDI-12 commands is given in Appendix B.

Send Id Cmd?
Pressing the ENTER key causes the SDI-12 Identify command "aI!" to be sent to the sensor using the address defined above. The sensor's response is displayed on the screen. The response from the sensor is larger than the screen so it will scroll across the screen to allow the whole message to be viewed. If there are any errors, a time out message is displayed.

Send Verify Cmd?
Pressing the ENTER key causes the SDI-12 Verify command "aV!" to be sent to the sensor using the address defined above. The sensor's response is displayed on the screen. If there are any errors, a time out message is displayed. The results of the verify command may be viewed by issuing the "Send Data 0 Cmd." The send data command is explained below.

Send Measure Cmd?
Pressing the ENTER key causes the SDI-12 Measure command "aM!" to be sent to the sensor using the address defined above. The sensor's response is be displayed on the screen. The data results may be viewed by issuing the "Send Data 0 Cmd." If there are any errors, a time out message is displayed.

Send Data 0 Cmd?
Pressing the ENTER key causes the SDI-12 Data Retrieval command "aD0!" to be sent to the sensor using the address defined above. The sensor's response is displayed on the screen. The sensor may respond with more data than what will fit on the screen, so the returned data will scroll across the screen to allow the whole message to be viewed. If there are any errors, a time out message is displayed. Press the CANCEL key to continue. If the "D0" command did not retrieve all the available data, then the screen will indicate "Send Data 1 Cmd?" and will continue to bump the "Dx" command until all the data has been retrieved.

Send Extended Cmd?
Pressing the ENTER key causes what ever is entered in the extended command field to be sent to the sensor using the address defined above. The "!" terminator is added automatically. The sensor's response is displayed on the screen. The sensor may respond with more data than will fit on the screen, so the returned data will scroll across the screen to allow the whole message to be viewed. If there are any errors, a time out message will be displayed.

Ext Cmd[0]
This screen is used to enter or edit an extended command. It is not necessary to include the sensor address or the "!" terminator, they are added automatically.

3.6.7 H-310 Setup

The following screens allow the user an easy way to setup the Design Analysis H-310 sensor without having to know the SDI-12 commands used to set the slope and offset coefficients in the H-310. These same setups can be done in the standard transparent mode using extended commands but it is easier here as the H-500XL™ sends all the commands automatically.

Sensor Input Setup->	H-310 Setup ->	SDI-12 Test Adrs [0]
		H310 Stage [X.XX]
		H-310 Units [PSI]

SDI-12 Test Adrs [0]
This option sets the SDI-12 address the H-500XL™ will use to communicate with an H-310 sensor. This is not related to the option that is used to set the address of the H-500XL™ when it is used as a sensor.

H310 Stage [X.XX]
This option screen is used to view the current stage reading of the H-310. It may also be used to enter an initial stage value and have the H-500XL™ automatically calculate the necessary offset. The H-500XL™ will then issue the appropriate SDI-12 commands to program the offset value of the H-310. The default offset value of the H-310 is 0.0.

H-310 Units [PSI]
This option is used to set the units that the stage value will be reported in. The default is set to report the PSI reading of the H-310 pressure transducer. The user can change the units to report the stage in feet or enter a user defined slope to convert the value to some other unit. The available options are listed here.

Feet: This uses a slope of 2.3067 and will report water level in feet.

Feet Dn: This uses a slope of -2.3067 and reports water level from the surface in feet. As the water level rises the reported number becomes smaller.

PSI: This uses a slope of 1.00 and will report the PSI based on the water level.

User Def: This will open a new menu screen allowing the user to enter in any slope value desired. This could be used to report the stage in meters, inches, etc.

Remember these settings are programmed into the H-310, not the H-500XL™.

3.6.8 H-330 Setup

The following screens allow the user an easy way to setup the Design Analysis H-330 and H-331 shaft encoders without having to know the SDI-12 commands used to set the slope and offset of the encoder. These same setups can be done in the standard transparent mode using extended commands, but it is easier here as the H-500XL™ sends all the commands automatically.

Sensor Input Setup->	H-330 Setup ->	SDI-12 Test Adrs [0]
		H330 Stage [X.XX]
		H-330 Units [Ft CW]

SDI-12 Test Adrs [0]
This option sets the SDI-12 address the H-500XL™ will use to communicate with an H-330 or an H-331 encoder. This is not related to the option that is used to set the sensor address of the H-500XL™ when it is used as an SDI-12 sensor.

H330 Stage [X.XX]
This option screen is used to view the current stage reading of the H-330. It may also be used to enter an initial stage value and have the H-500XL™ automatically calculate the necessary offset. The H-500XL™ will then issue the appropriate SDI-12 commands to program the offset as needed in the H-330.

H-330 Units [Ft CW]
This option is used to set the units the stage value will be reported in. The H-330/H-331 has a resolution of 200 counts per revolution. Using a 1.0 foot circumference pulley equates to 200

counts per foot. The default slope value of 0.005 per count will report each complete turn as one foot of water level change. The user can change the units to one of two predefined options or select a user defined value. The available options are listed below.

Ft CW: This uses a slope of 0.005 and will report water level in feet based on the pulley turning clock wise for an increase in water level.

Ft CCW: This uses a slope of -0.005 and reports water level in feet based on the pulley turning counter clock wise for an increase in water level.

User Def: This will open a new menu screen allowing the user to enter in any slope value desired. This could be used to report the stage in meters, inches, etc.

Remember these settings are programmed into the H-330 or H-331, not the H-500XL™.

3.7 Output Options

Data coming into the H-500XL™ can be stored to an internal data card, sent to a GOES Radio, sent to a line printer or terminal, etc. These sub menus allow you to define the exact operation of the output options. The following menus list only the main sections for the output options. Some sub sections are large enough to warrant their own section or chapter.

Output Options ->	[illegible]
	GOES Options ->
	Remote Display ->
	Voice Modem ->
	Auto Print [Off]
	Alert Radio ->
	Email Options ->
	4-20mA Options ->

The sub menu options here are used to enable logging, meaning scanned data will be stored to data memory. These options also set the order data is stored on the card and data format.

Output Options ->	Logging Options ->
	[illegible]
	Remote Display ->
	Voice Modem ->
	Auto Print [Off]
	Alert Radio ->
	Email Options ->
	4-20mA Options ->

The sub menu options here are used to enable the GOES radio and define all radio operations along with what data will be transmitted. The GOES radio options will be discussed in detail in chapter 5.

Output Options ->	Logging Options ->
	GOES Options ->
	[illegible]
	Voice Modem ->
	Auto Print [Off]
	Alert Radio ->
	Email Options ->
	4-20mA Options ->

The sub menu options here are used to enable one data value to be sent to a large remote display.

Output Options ->	Logging Options ->
	GOES Options ->
	Remote Display ->
	[illegible]
	Auto Print [Off]
	Alert Radio ->
	Email Options ->
	4-20mA Options ->

The sub menu options here are used to enable the voice modem operation, and to select the data that will be sent to the voice modem.

Output Options ->	Logging Options ->
	GOES Options ->
	Remote Display ->
	Voice Modem ->
	[illegible]
	Alert Radio ->
	Email Options ->
	4-20mA Options ->

The sub menu options here are used to turn on and off the auto print option. When turned on, the data logged to the internal data card will also be sent out com port 3 to a serial printer or a PC terminal.

Output Options ->	Logging Options ->
	GOES Options ->
	Remote Display ->
	Voice Modem ->
	Auto Print [Off]
	[illegible]
	Email Options ->
	4-20mA Options ->

The sub menus here are used to setup the operations of the ALERT radio system. ALERT stands for Automated Local Evaluation in Real Time.

Output Options ->	Logging Options ->
	GOES Options ->
	Remote Display ->
	Voice Modem ->
	Auto Print [Off]
	Alert Radio ->
	[illegible]
	4-20mA Options ->

This option is used set up a special modem that can send data to email addresses.

Output Options ->	Logging Options ->
	GOES Options ->
	Remote Display ->
	Voice Modem ->
	Auto Print [Off]
	Alert Radio ->
	Email Options ->
	[redacted]

The sub menu options here are used to enable the 4 to 20 mA output. The user will also select the data source and the limits for the data source.

3.7.1 Logging Options

The following menu structure represents the sub menus under the "Logging Options" header. This is where the user defines which data will be stored in the data memory and other logging functions.

OPERATIONAL NOTE
When the internal data memory fills up, no new data will be logged. There is no wrap type of operation. Scanning will continue so other output options like the GOES radio will continue to operate properly, but new data will not be logged to the internal memory.

Output Options ->	Logging Options ->	Logging [On]	
		Log .NEW File [Off]	
		Report Options ->	Source 1 [Date]->
			Header 1[ ]->
			Skip Rate 1 [01] ->
			Digits 1 [2] ->
			Col 1 Fn() [NOW]->

Logging [On]
This is a global enable option allowing logging to be switched on or off without having to change any other logging option. The following options allow the user to define how the scanned data will be stored in memory.

Log .NEW File [Off]
There are some special applications that will be set up to automatically download data from the H-500XL™ over the serial port via modem or some other type of communication

equipment. The H-500XL™ can be setup to log data to a special file called a .NEW file. The data will be stored in both the main file and in the .NEW file. A PC or other device can easily be programmed to collect data from the H-500XL™ by issuing the "DUMPNEWDATA" command. The data in the .NEW file will be transmitted to the system issuing the command. The .NEW file will be terminated with 3 NULL characters making it easy for the other system to know the end of file has been received. At this point the system issuing the commands could send the "ERASENEWDATA" command in order to delete the .NEW file. On the next scan the .NEW file would be created again, and the new data would be placed in it. The system issuing the commands could be setup to automatically collect the data as often as needed, from every few minutes to once every few months. The new data could also be retrieved manually by the user.

The H-500XL™ will continue to place data in the .NEW file until told to erase it. If during the data transfer a break in the communications happens, most likely the data would not all get to the receiving system, and the H-500XL™ would not receive the erase command, so the new data would still be available for retrieval. This two command approach protects the user from losing data. The main data file will always be available for retrieval and will include all data from the time scanning was enabled.

If multiple users are looking at the .NEW file it will take some coordination on their part on who will be erasing the .NEW data file.

Without the use of the .NEW file the user would have to retrieve the main data file which would become larger as time passed causing the transmission to become exceedingly long and the user would have to deal with data that has already been transmitted before.

Report Options

These table screens allow the user to define what data to log, etc. This section of menus is like a big table where each column has several options to define a single data value. There are 25 columns, one for each data value to be logged. Use the ARROW keys to move around through the table of options as before. The section of menus below represents only a few columns of the "Report Options," menu but it is only a partial listing as it extends much further to the right.

Report Options ->	Source 1 [Date]->	...	Source 25 [None]->
	Header 1[ ]->	...	Header25[ ]->
	Skip Rate 1 [01] ->	...	Skip Rate 25 [01] ->
	Digits 1 [2] ->	...	Digits 25 [2] ->
	Col 1 Fn() [NOW]->	...	Col 25 Fn() [Now]->

Source 1 [Date]->
The source option is used to select the data source for each column. The selection can be changed by pressing the ENTER key and using the UP and DOWN ARROW keys to scroll through the list of valid selections. Using the RIGHT and LEFT ARROW keys will move to the next or previous column of the table.

The default source values for the 25 columns are:

Source 1 = Date
Source 2 = Time
Source 3 = Batt
Source 4 to 25 = None

Available options are listed below.

None	The column is turned off, and all following columns are ignored.
Date	Place the current Date in the column.
Time	Place the current Time in the column.
Counts	Place the summation count value in the column.
TotCnt	Place the total counts value in the column.
AnaX	Place analog X value in the column (there are 4 analog channels).
DigI/OX	Place digital I/O X value in the column (there are 2 digital I/O ports).
Freq	Place the Frequency value in the column.
Encodr	Place the encoder value in the column.
Batt	Place the Battery reading in the column.
TScans	Place the total number of scans in the column.
RsrvdX	This option is reserved for future use and is not valid at this time.
SDIAP	Place the selected SDI-12 reading in the column (valid AP is 01 - 99). Note that the SDI-12 entries go from address 0 to 9. The parameter is always 1 to 9. The entry SDI 62 would indicate the sensor at address 6 and use the 2nd parameter.
FNTXX	Place the selected user defined math function result in the column (01 - 40). Note there are 40 user definable math functions that can be used for advanced operations. Selecting a math function as a report column source will cause that function to be analyzed and the results logged to that column. See a later section for a detailed description of the math operations.

When the H-500XL™ turns on to scan the connected sensors and log data, it looks at the selections in these columns to see exactly which sensors to scan and log. As soon as it comes to a column source defined as "None" it stops scanning the sensors and moves to the next task.

Header 1 [ ]->
This option is used to enter a header for each column of data. For example if the source is set to "Counts," the column header could be set to Rain(in), or it could be set to anything the user decided. This is especially useful when the source is one of the SDI-12 channels as they are not intuitive on what the input is.

Skip Rate 1 [01] ->
This screen displays the current scan interval skip rate for this column. This option is used to allow the H-500XL™ to log data to the different columns at different rates. The default value is 1, which means that data will be logged to the column on every scan. If the rate is set to 2, the data would be logged every 2nd scan. This can be thought of as, "log every N^{th} scan to the column" where N is the log skip rate. Valid entries are 1 to 99.

Digits 1 [2] ->
This option is used to set the number of digits to the right of the decimal to use for this column. This allows values like the battery voltage to be displayed without showing too much precision, and other values like counts to be logged with the precision needed.

Col 1 Fn()[NOW]->
Column functions are used to perform mathematical operations on the data logged in the data file. These operations are based on all the data scanned for that column since scanning was turned on, or they are based on the skip rate for that column. Column functions that end in "_T" are based on the total data set, and functions that end in "_S" are based on the data scanned during a specific skip rate period.

The user definable functions may need to be used to generate specialized functions for specific applications.

Now: This is the default setting. This will take the last scanned value for this column and log it into the data file. This is not affected by the skip rate setting.

Avg_S: This will average X number of scanned values for this column and log the results. The value of X is the skip rate. Lets say the scan rate is every 15 minutes and one column is set up to log the temperature from a sensor connected to analog channel 1 with a skip rate of 1, and a column function of NOW. And a second column is setup to log data from the same sensor but the skip rate is set to 96, and the column function is set to AVG_S. The first column will log the current temperature every 15 minutes. The second column would average 96 readings and log the results once a day since there are 96 scans in a day scanning at a rate of 15 minutes.

Max_S: This will find the maximum value scanned out of the last X number of scanned values for this column and log the results. The value of X is the skip

rate. Continuing on with the example for the Avg_S function, lets say another column is set up to log the temperature from the same sensor connected to analog channel 1 with a skip rate of 96, and a column function of MAX_S. This column will log the maximum temperature for the day.

Min_S: This will find the minimum value scanned out of the last X number of scanned values for this column and log the results. The value of X is the skip rate. Continuing on with the example for the Avg_S function, lets say another column is set up to log the temperature from the same sensor connected to analog channel 1 with a skip rate of 96, and a column function of MIN_S. This column will log the minimum temperature for the day.

Sum_S: This will add up the last X values scanned for this column where X is the skip rate. For example, lets say there are two columns set up to report counts. The first is set up to report counts on every scan and the second is set with a skip rate of 96 so it will report only once a day with a total count for that day.

Avg_T: This will average every scan regardless of the skip rate. If the scan rate is 15 minutes and one column is set up to log the water level of a lake with a skip rate of 1 and a column function of NOW, and a second column is set up to log the same data with a skip rate of 96 and the column function set to AVG_T, the first column will log the current lake level every 15 minutes. The second column would log a value once a day because the skip rate is set-to 96, but the value would be the average water level since scanning was turned on. All values scanned since scanning was enabled would be included in the average.

Max_T: This would log the maximum data value scanned since scanning was enabled, regardless of the skip rate. When the value was logged would be based on the skip rate. If the scan rate is 15 minutes and one column is set up to log the water level of a river with a skip rate of 1 and a column function of NOW, and a second column is setup to log the same data with a skip rate of 1 and the column function set to MAX_T, the first column will log the current river level every 15 minutes. The second column would log every 15 minutes the maximum value since scanning was enabled. This data value would be like a crest stage gage showing the highest water level since scanning started.

Min_T: This would log the minimum data value scanned since scanning was enabled, regardless of the skip rate. The skip rate determines how often data is logged but does not indicate to the system to start looking for a new minimum value. If the scan rate is 15 minutes and one column is set up to log the battery voltage with a column function of MIN_T, the column would log the minimum battery value scanned since scanning was enabled.

Sum_T: This will add up all the values scanned for this column since scanning was enabled, regardless of the skip rate. The skip rate only sets how often data is logged.

3.7.2 GOES Options

The GOES radio connects to the H-500XL™ through com port 2. The menu options allow the user to change the configuration of the GOES radio from the H-500XL™. The GOES radio operations are a major portion of the H-500XL™ and a complete chapter has been dedicated to these options. The GOES options are explained in detail in Chapter 5.

3.7.3 Remote Display

The H-500-RIS is a Remote Indicator System (remote display) used to show current readings from a selected sensor. The display has 2 lines with 20 characters each. The characters are about ½ inch in height. Each time the H-500XL™ makes a measurement the remote display is updated. The H-500XL™ will send the current time and date to be displayed on the top line, and the user defined label and selected data value will be displayed on the bottom line. Make sure the display is connected to com port number 3.

Output Options ->	Remote Display ->	Rem Display [None]
		Rem Label [Label =..]

Rem Display [None]
This option is used to select the data that will be shown on the bottom line of the display.

Rem Label [Label =]
This option allows the user to enter a label to describe the data being displayed.

If the "Rem Display" option was set to "Counts" and the "Rem Label" option was defined as "Rain =," the display would be formatted as follows:

```
08/27/96 12:30:00
Rain  =  2.45
```

3.7.4 Voice Modem

The Voice Modem options are used to setup which data will be sent to the H-219 voice modem for voice playback. When this option is enabled, the H-500XL™ will send the selected data to the modem in a format and order recognizable by the voice modem. This allows the voice modem to recite the data when used in the voice mode. This option does not have to be enabled in order to use the modem in a data mode, allowing a connection to the H-500XL™. The modem must be connected to com port 1.

Output Options ->	Voice Modem ->	Voice Modem [Off]
		Box 0 Source [None]
		:
		Box 9 Source [None]

Voice Modem [Off]
This is a global enable/disable of the voice modem operation. This allows the voice mode of the modem to be turned off without having to change any of the other options.

Box 0 Source [None]
The voice modem has 10 variables used to store data values. These variables are labeled box 0 to box 9. Think of this as placing data in a mail box labeled 0 to 9. If the Voice Modem is enabled and the H-500XL™ has just finished logging data to the data memory it will check to see what data is to be sent to the voice modem by looking at the setting for Box 0 Source. If this is set to Counts for example then the counts value is sent to the voice modem in a format usable by the voice modem. This continues on until all 10 variables are sent or until the first source defined as None is encountered.

3.7.5 Auto Print [Off]

The Auto Print option is used to transmit out the third serial port the same data being logged to the internal data card. This may be used for test purposes or for an actual application. It is simply turned on and off here as it uses the same setups as defined under the logging report options.

Output Options ->	Auto Print [Off]

3.7.6 ALERT Radio

The following menus are used to enable and define what data will be transmitted using the ALERT/IFLOWS radio system. Up to five data values can be monitored and transmitted based on user entered alarm conditions.

Alert Radio ->	ALERT Radio [Off]			
	ALERT Sensor Setup->	Source 1 [None]->	...	Source 5 [None]->
	|	Max Rng[20.470] ->	...	Max Rng[20.470] ->
	|	Min Rng[0.000] ->	...	Min Rng[0.000] ->
	|	ALERT ID 1 [0000]->	...	ALERT ID 5 [0000]->
	|	Trg 1 [Always]->	...	Trg 5 [Always]->
	|	Trig Pnt[1.000]->	...	Trig Pnt[1.000]->
	|	HoldOff [015]Minutes	...	HoldOff [015]Minutes
	|	Override[2.000]->	...	Override[2.000]->
	|	Txd Every[24Hours]->	...	Txd Every[24Hours]->
	|	Tx Time [HH:MM:SS]->	...	Tx Time [HH:MM:SS]->
	|	Force ALERT 1 Txd?	...	Force ALERT 5 Txd?
	ALERT Radio [H-264]			

ALERT Radio [Off]
This option is used to enable or disable ALERT radio operations. The default is "Off".

ALERT Sensor Setup
The following menus are used to enable and define what data will be transmitted, define the alarm condition, etc. Up to five data values can be monitored and transmitted.

ALERT Sensor Setup->	Source 1 [None]->	...	Source 5 [None]->
	Max Rng[20.470] ->	...	Max Rng[20.470] ->
	Min Rng[0.000] ->	...	Min Rng[0.000] ->
	ALERT ID 1 [0000]->	...	ALERT ID 5 [0000]->
	Trg 1 [Always]->	...	Trg 5 [Always]->
	Trig Pnt[1.000]->	...	Trig Pnt[1.000]->
	HoldOff [015]Minutes	...	HoldOff [015]Minutes
	Override[2.000]->	...	Override[2.000]->
	Txd Every[24Hours]->	...	Txd Every[24Hours]->
	Tx Time [HH:MM:SS]->	...	Tx Time [HH:MM:SS]->

Source 1 [None]->
This option is used to define what data will be transmitted. The data value for this source is also used to test against the trigger point based on the trigger mode to see if a transmission should be made.

Max Rng[20.470] ->
This option is used to set the maximum input value for the selected data source. This value along with the minimum value set in the next menu are used to convert standard input values for the data source into values compatible with the ALERT format. The ALERT data integer value must be a number between 0000 and 2047. This range normally does not directly correlate to the data source. For example, a 15 PSI pressure transducer will cover a range of about 35 feet of water. In this case the maximum value could be set to 35.00 and the minimum to 0.00. Now it is easy to say an ALERT data value of 0000 equals 0.00 feet of water and an ALERT value of 2047 would be 35.0 feet of water, but what about other water levels? The H-500XL™ first calculates a slope based on the max and min values as follows:

$$\frac{2047}{\text{Max - Min}} = \frac{2047}{35.0 - 0.0} = \frac{2047}{35.0} = 58.486 \text{ counts per foot of water}$$

Now the H-500XL™ will take the water level that will be between 0.0 and 35 feet and multiply it by 58.486 to get a number between 0 and 2047, and the integer portion of the number will be the value transmitted. Notice that only using the integer portion of the number will cause some rounding errors.

At the receiving station, the ALERT value between 0 and 2047 can be easily converted back to feet by dividing the ALERT value by 58.486.

To see what the resolution is simply invert the calculated slope. In this example, 1/58.486 is 0.017098, meaning each count of the ALERT data format is equal to 0.017098 feet of water.

The default value for the Max Range is 20.470. This value was chosen because it is a factor of 100 of 2047. To see the advantages of this lets look at using a shaft encoder that has 1 count per 0.01 foot of water. In this case each count of the ALERT data format is equal to 0.01 foot of water. This works good as long as the water level will be between 0.0 and 20.47 feet. The math is as follows:

$$\frac{2047}{20.47 - 0.0} = \frac{2047}{20.47} = 100 \text{ counts per foot}$$

Notice this is the same as 100 counts per revolution on a shaft encoder which is one foot. Also each count will be 0.01 feet.

The default value of 20.47 works good for rain gauges also as each tip is 0.01 inch of rain.

For input values that go negative an offset will be required at the receiving site to regenerate the real data value. For example, a temperature probe that goes from -50.0 to +50.0 degrees C would be calculated much the same as before to come up with the slope.

$$\frac{2047}{50 - (-50)} = \frac{2047}{100} = 20.47 \text{ counts per degree C}$$

Now the receiving station will divide the ALERT formatted data by 20.47 to get a temperature in the range of 0 to 100. The receiving station must also use the minimum value as an offset to shift the data back to the range of -50.0 to +50.0 degrees C.

Minimum Range
This option is used to set the minimum input value for the selected data source. See the Maximum Range Option above on how this is used by the system.

ALERT ID
Each sensor transmitting on an ALERT network must have a unique ID. The ID will be a number between 0000 and 8191 assigned by the ALERT network administrator.

Trigger Mode
The trigger mode option allows the user to decide what condition should be met before sending a transmission. The following shows the options.

> Set Pt: Greater than the set point. Transmit IF the data is greater than the Set Point. This could be used to schedule a transmission due to high water.

< Set Pt: Less than the set point. Transmit IF the data is less than the Set Point. This could be used to schedule a transmission based on the battery level starting to drop.

Delta: Transmit based on a change in data. A transmission is scheduled IF the data changes more than the set point value. The change can be either an increase or a decrease. This could be used to track a changing stream or rainfall.

Always: Always transmit. No conditions have to be met, a transmission is automatically sent on each scan.

Trig Point [XX.XX]
The "Trigger Set Point" option is used to enter the value used to compare with the actual data to see if a transmission should be sent. The last section describes the type of conditions that can be used to trigger a transmission. For example, if the user wanted to transmit based on the rain level (counts) exceeding 2.0 inches, the trigger mode would be set to "> Set Pt" and the trigger point would be set to 2.0. Now at each scan interval that the rain level (counts) was at 2.0 inches or greater, the trigger condition would be true and a transmission would be attempted. When the rain level (counts) dropped below the 2.0 inch level the transmissions would cease.

Hold Off
Once a transmission has been sent it may be desirable to stop future transmissions for a period of time in order to prevent a high number of transmissions from the same sensor. The unit uses a "Hold Off" variable to indicate how long this time period should last. This hold off variable is in minutes, meaning hold off for xx minutes.

Override
During the hold off time it still may be desirable to transmit if the data value has drastically changed. This override value is a secondary trigger level used like the normal trigger level described above during the hold off time.

Txd Every
In some cases the data will not change enough to cause a transmission. In this case the user may begin to wonder if the equipment is working or not. This option is used to force a transmission at some time interval from once an hour to once a day so the user can verify the equipment is working.

Tx Time [00:00:00]
It is not good if all sites in an ALERT network tried to send a timed transmission at the time. This option is used to set a time offset to select when a timed transmission should be sent. The time entered here will not be the exact time of the transmission. At each scan the current time will be compared with the Tx Time and the transmit rate to see if a transmission should be sent.

Force ALERT Txd?
During the installation it may be desirable to force a transmission in order to test the system. Pressing the ENTER key here will cause a transmission to be sent using the ID programmed as described above and using the data based on the data source and the min and max settings as described above.

ALERT Radio [H-264]
This option is used to select which ALERT radio is in use.

3.7.7 Email Options

The H-260 is a special modem used to send email messages. When used with the H-500XL™, it will be used to send data collected by the H-500XL™ to some central site via email message. Data can be sent at regular intervals such as hourly or daily, or can be sent based on some alarm condition. The following options are used to set up the email options in the H-500XL™. Note that the H-260 must also be programmed before being connected to the H-500XL™.

Output Options ->	Email Options ->	Timed Email [XXX]
		Send Data [XXXXXXXX]
		Include Headers[XXX]
		Include Site ID[XXX]
		Email Alarms [XXX]
		Trg Source [XXXXXXX]
		Trg Mode [XXXXXXXXX]
		Trg Point[XXXXXXXXX]
		Send Email Now?

Timed Email
This option is used to enable or disable timed email messages from being transmitted. The default setting is Off.

Send Data
This option is used to indicate how often timed email messages should be sent. This ranges from every scan to once a day. The default is daily.

Include Headers
Set this option to Yes if it is desirable to send column header information with the data. If the data is to be automatically collected by some other system, then normally column headers are not used. If the data is reviewed by a person then the column headers may be helpful. The default is No.

Include Site ID
Email messages may include the user entered Site ID information. If this option is set to yes then the site ID will be sent with the data. The default is No.

Email Alarms
This option is used to enable or disable email alarm messages. The default setting is Off.

Trg Source
This option is used to select which system input variable will be used to evaluate if a message should be sent or not. The standard options include counts, analog1, etc.

Trg Mode (Trigger Mode)
The trigger mode option allows the user to decide what condition should be met before sending an email message. The following shows the options.

> Set Pt: Greater than the set point. Send Email message IF the data is greater than the Set Point. This could be used to send a message due to high water.

< Set Pt: Less than the set point. Send a message IF the data is less than the Set Point. This could be used to send a message based on the battery level starting to drop.

Delta: Send a message based on a change in data. A message is sent IF the data changes more than the set point value. The change can be either an increase or a decrease. This could be used to track a changing stream or rainfall.

Always: Always send a message. No conditions have to be met, a message is automatically sent on each scan.

Trg Point [XX.XX]
The "Trigger Set Point" option is used to enter the value used to compare with the actual data to see if a Email message should be sent. The last section described the type of conditions that can be used to cause an Email message to be sent. For example, if the user wanted to send a message based on the rain level exceeding 2.0 inches, the trigger mode would be set to "> Set Pt" and the trigger point would be set to 2.0. Now at each scan interval that the rain level (counts) was at 2.0 inches or greater, the trigger condition would be true and a message would be sent. When the rain level (counts) dropped below the 2.0 inch level, the Email messages would cease.

Send Email Now?
This option is used to force a message to be sent now. This is an easy way to test the hardware to see that it is all working properly.

3.7.8 4 to 20mA Options

These options allow the H-500XL™ to use any of its input signals as a data source to generate a current output simulating a 4 to 20 mA sensor.

Output Options ->	4-20 mA Options ->	mA Output = X.XXX
		4-20 Source [None]
		Max Value [20.00]
		Min Value [0.00]

mA Output = X.XXX
This screen shows what the output current should be if it were measured with a current meter. It should be in the range of 4 to 20 milliamps. This is based on the value of the data source, the Max value and the Min value.

4-20 Source [None]
The data source is any of the input signals; counts, Analog 1, etc.

Max Value [20.00]
The Max value is used to set the top end of the input signal. For example if counts was used as the data source and the level could go to 20 inches but not higher, the max would be 20.00.

Min Value [0.00]
The Min value is used to set the bottom end of the input signal. Again, if rain level (counts) was used as the data source and the rain level goes from 0.0 inches to 20.0 inches, the min value would be set to 0. Now as the rain level (counts) would change between 0.0 and 20.0 inches of water, the 4 to 20 mA output would also change proportionally. Zero inches of rain would produce a 4.00 mA output, and 20.0 inches of rain would produce a 20.0 mA output. Note that as the range is enlarged the resolution of the output current is decreased and the opposite if the range is reduced. The resolution is calculated as:

(mA Output Range) / (Input Range) = mA per Input Unit Change.

In this example: (20-4) / (35-0) = 16/35 = 0.45714mA per foot change.

3.8 Data Options

The following menu structure represents all the sub menus under the "Data Options" header. These sub menus allow you to check the status of the data memory and card memory. They are also used to copy data to the external card and to erase both sets of memory.

Data Options ->	Data Memory Ok	
	Data Card Ok	
	View current file->	MM/DD/YY HH:MM:SS ...
	Copy Data To Card ?	
	Erase Internal Data?	
	Erase Card Data ?	
	Calc DataBytes Free?	

Data Memory OK
The first message displayed here is a status message indicating the condition of the internal memory used for data storage. The message "Data Memory Ok" is the most common message and indicates all is well with the internal data memory. The other status message would be "Data Memory Error". This message should never be encountered. It may be seen if this menu screen was accessed at the same time the unit was storing data to memory, then this could happen. Back out of the menu and try again. If this message consists consult the factory.

Card Data OK
This is a status message screen for the external data card. It has the same messages and meanings as the internal memory status screen. The message "Card Memory Ok" is the most common message and indicates all is well with the external data card. The other status message would be "Card Memory Error". This message will be encountered if the external data card is not installed, or if this menu screen was accessed at the same time the unit was storing data to memory, otherwise it should not be encountered. With a card installed, back out of the menu and try again. If the error message consists consult the factory.

View Current File?
This option allows the user to enter into the data file and see what is being stored to the card. When first entering the file the last line will be displayed. If more than 20 characters are in the line then the first 20 characters are displayed. Using the four ARROW keys the user can move around through the data. If this option is in use and a scan starts, then the system will back out of this option allowing the scan process access to the file. Reentering the option will display the newest data just scanned.

Copy Data To Card?
One method of data retrieval is to use an external card and copying the data from the internal memory to the external card. Press the ENTER key to start this option and a screen will appear similar to "Copying FILE_01.A00" indicating which file is being copied to the external card. Once the file transfer has completed the external card can be removed, placed in other systems for continued data retrieval, and then taken back to the office for transferring data to a main computer system and data analysis.

Data files use the text entered into the "Site ID" option as the filename. Data file extensions start at .000 and increment to .001, .002, etc. Each time scanning is turned on and logging is enabled a new file will be started and the extension will be one more than the last file. When copying files from internal memory to the external data card, file extensions will be modified. The first character of the extension will be changed to a letter starting with "A". If the file already exists, then the first character is bumped to a "B". This continues until the file is saved on the external card. This allows a user to copy data from the same data logger to the same card over and over again without overwriting older data. For example the user copies data to the card one day, visits the site in one month and copies the data to the same card again. Now the original data will be on the card with a file name of Site_ID.A00, and the new data with a file name of Site_ID.B00. This also protects the data from being overwritten if the same card is used to retrieve data from two sites that have the same 'Site ID" name.

There may also be a file copied to the external data card with a .NEW extension. This file is provided for users who write there own data dump utility program on a PC that will automatically download the newest data. This file is reset each time the file is transferred over the serial port using the send new command and erase new data command.

Configuration files may also be copied from the internal memory to the external data card.

Erase Internal Data?
Pressing the ENTER key here will cause all the internal data to be erased and the memory space freed up for new data. Make sure the data has been retrieved one way or another before the data is erased. **Note**; *once erased the data cannot be retrieved.* This option cannot be used while scanning is enabled. The message "Not While Scanning" will be displayed if the user tries to erase the internal data while scanning is turned on.

Erase Card Data?
Pressing the ENTER key here will cause all the data on the external card to be erased and the memory space freed up for new data. Make sure the data on the card is no longer needed before the data is erased. Once erased the data cannot be retrieved. The external data card can be erased while scanning is turned on.

Calc DataBytes Free?
Pressing the ENTER key here will cause the system to calculate the number of bytes free and available for data storage. This option may take several seconds to complete depending on the size of memory in use. In most cases this should not be an issue. The following gives an example of how to determine memory usage:

Suppose 4 megabyte memory space is used to store the data, and the data to be stored is the date, time, stage, temperature, rain, and battery voltage at 15 minute intervals. One line of data would look like the following:

07/23/2000 11:45:00 9.87 23.5 0.00 12.2

This line is 39 characters plus we add two more for the carriage return and line feed to move to the next line is a total of 41 characters. At 15 minute intervals this would be 96 scans per day or 96 * 41 = 3936 bytes per day. Divide by a 4 MB data space, 4,000,000 / 3936 = 1016 days and this is the time the system will have to run to fill the memory using these settings.

Calc CardBytes Free?
This calculates the bytes free on the external data card. This also takes some time to complete and is dependant of the size of card installed, larger cards do take more time.

3.9 Scan Setup

The following menu structure represents all the sub menus under the "Scan Setup" header:

Scan Setup ->	Scanning [Off]
	Scan Rate [HH:MM:SS]
	Next Scan = HH:MM:SS
	Nxt Scan At[HH:MM:SS]

Scanning [Off]
The scanning process is the heart of the H-500XL™ system. Turning on scanning will start the logging process (if enabled), will start GOES transmissions (if enabled), and all other major activities the H-500XL™ was designed for.

Scan Rate [HH:MM:SS]
This screen displays the current scan rate. The scan rate can range from 1 second to 24 hours. If the scan rate is set faster than the time the H-500XL™ takes to make one scan then the actual scan rate will be a multiple of the entered value. For example a 30 second rate would turn into a 1 minute scan rate if the measurement process took 35 seconds to complete.

Next Scan [HH:MM:SS]
This screen displays the amount of time to the next scan. It will count down from the current scan interval to zero (00:00:00).

Nxt Scn At[HH:MM:SS]
This screen shows the time the next measurement process will take place. When scanning is turned on, the H-500XL™ calculates the best time to start scanning based on the scanning interval and the current time. This process tries to keep the logged data or data being sent to the GOES radio synchronized to some logical time interval like on the hour for hourly scans or at 00, 15, 30 or 45 minute time marks for a 15 minute scan interval.

This time can also be changed based on user needs. Changing this time may cause logged values that are based on a skip rate to be reported at times unexpected by the user, therefore it is best if possible to let the system decide when the first scan should be scheduled.

3.10 System Setup

The following menu structure represents all the sub menus under the "System Setup" header. General system options unrelated to input options or output options are normally found here. These options include setting the time and date, and defining a name for the site. Other options for saving and retrieving setup information and resetting the system to its defaults are also found here.

```
System Setup      ->  Time [HH:MM:SS]
                      Date [MM/DD/YY]
                      Date Fmt [MM/DD/YY]
                      Sync [Sync Disabled]
                      Sync Time Now?
                      Last Synced On DD/MM
                      Site ID [XXXXXXXXXX]
                      Serial Port Setup ->  Baud Rate [XXXX]
                        |                   Flow Control [XXX]
                        |                   Char Delay 1 [XXX]
                        |                   Line Delay 1 [XXX]
                        |                   Emulation [XXXXXX]
                        |
                      Def Status Screens->  Label 1   [Label = ]
                        |                   Source 1  [None    ]
                        |                   :
                        |                   Label 5   [Label = ]
                        |                   Source 5  [None    ]
                        |
                      Sensor Mode Setup ->  Sensor Mode Adrs [X]
                        |                   SDI Meas. Time = XXX
                        |                   Par 1 Source[XXXXXX]
                        |                   :
                        |                   Par 9 Source[XXXXXX]
```

Continued on Next Page

System Config Opts->	Copy Setups to Mem ?
|	Copy Setups to Card?
|	Load From Memory ?
|	Load From Card ?
|	Reset to Defaults ?
|	
Update Firmware?	

Time [HH:MM:SS]
This screen displays the current time and is used to update the time if it needs adjustments. The display will be updated each second to allow easy viewing of the current time.

Date [MM/DD/YY]
This screen displays the current date and is used to update the date if it needs adjustments.

Date Fmt [MM/DD/YY]
This option is used to select the format for displaying the date. Day, month, year; or month, day, year; or year, month, day.

Sync [Sync Disabled]
The accuracy of the time clock in the H-500XL™ may not be as accurate as needed. If a GOES radio is part of the system, the H-500XL™ may be synced to the GOES clock or to a GPS system that will be very accurate. If the time is synced to the GOES radio or to a GPS system, then the time of the H-500XL™ will normally be set to coordinated universal time.

Sync Time Now
Press the ENTER key here to cause the system to sync the time clock immediately. This is normally used when installing a new system.

Last Synced On DD/MM
This screen is used to see when the time clock was last synced. It will show the day and month only. In most cases it will be the current day indicating it was synced just after midnight of that day. If the date is a few days old then it indicates the system has not synced for a few days. If this is syncing from a GPS system or a GOES radio updated by a GPS system then it could be the GPS system is not able to acquire satellite information.

Site ID [Site-ID]
The text used to identify the site will also be used for the file name on the data card. A file extension will be added automatically when the file is created. Since the site ID variable is used as a file name, it must not contain any imbedded blanks or wildcard characters (*) and must be left justified, in other words it must be a DOS compatible filename.

Serial Port Setup
The following options mainly apply to the first serial port. It may be configured to work with several types of modems or other systems.

Serial port number 2 is only used for the GOES radio and as such will not require the user to set it up for normal operations with the GOES radios.

The last serial port is used for the ALERT radio and for remote displays which normally operate based on fixed settings so again no user setup is required.

System Setup ->	Serial Port Setup ->	Baud Rate [XXXX]
		Flow Control [XXX]
		Char Delay 1 [XXX]
		Line Delay 1 [XXX]
		Emulation [XXXXXX]

Baud Rate [9600]
This option sets the baud rate for operation over the first serial port. The default is 9600 which will be used for nearly all applications. Some older modems and some cell phone modems work best as slower baud rates. Valid baud rates are 19200, 9600, 4800, 2400, 1200 and 300.

Flow Control [SW]
Flow control is used to pace the data through the serial port. It is important not to send data faster than the receiving system can receive it. There are two types of flow control, software and hardware flow control.

Software flow control (SW) is also referred to as XON / XOFF. When this is enabled the receiving system will send a character (XOFF) to the H-500XL™ instructing it to stop sending data until the receiving system can catch up. At the point the receiving system is ready it will send an XON to the H-500XL™ indicating it is ready for more data. Software flow control is the default.

Hardware flow control has the same function as software flow control does except it has additional hardware signals used to stop and start data transfer.

Char Delay [000]
This sets a delay between characters in milliseconds. Some modems, normally a radio modem may require this type of control in order to pass valid data over the serial port. When using a modem everything may look fine and then all at once it looks like garbage may be an indication of overflowing a buffer in the modem and it was not able to warn the H-500XL™ soon enough to prevent the problem and the data becomes junk. Try setting the character delay at 005 and then working up as needed. It may be a combination of a character delay and the line delay to provide the best system operation. The default is 0.

Line Delay [000]
This is a delay used at the end of each line of data sent out the serial port. This is in milliseconds. This used in combination with the character delay may be required by some modem applications. The default is 0 indicating no delay.

Emulation
Terminal emulation is used to control computer screen operations like clearing the screen or moving the curser around to update different portions of the screen without having to redraw the complete screen. If the information on the screen appears to be from the H-500XL™ but is displayed in abnormal places or intermixed with abnormal characters, then emulation is the most probable cause of the problem. The supported emulation modes are VT-52 and VT-100.

Def Status Screens ->
The default configuration of the H-500XL™ has the five user definable status screens initially disabled. The screens can be customized by the user to show the input value of any sensor connected to the system.

System Setup ->	Def Status Screens->	Label 1 [Label =]
		Source 1 [None]
		:
		Label 5 [Label =]
		Source 5 [None]

Each of the five screens can be assigned a label and a data source. All of the status screens are initially disabled, the source is chosen as "None." Selected data sources have unique operations such as TIME or to BATT; the screen will update automatically as the data changes. If the data source is set to any other data source; the ENTER key must be pressed in order to force the system to make a new measurement and update the displayed value.

Sensor Mode Setup
The H-500XL™ can be configured as an SDI-12 sensor when used with other data loggers. SDI-12 sensors will have a unique address and will measure between 1 to 9 data values. The options under this menu allow the user to select what address the H-500XL™ will respond to and what data will be returned to the data logger.

System Setup ->	Sensor Mode Setup ->	Sensor Mode Adrs [X]
	|	SDI Meas. Time = XXX
	|	Par 1 Source[XXXXXX]
	|	:
	|	Par 9 Source[XXXXXX]

Sensor Mode Adrs [0]
Each SDI-12 sensor used within a network must have a unique address. Addresses are a single character normally in the range of 0 to 9 but may include other characters like A to Z or a to z. The default address for the H-500XL™ is '0'.

NOTE: If the H-500XL™ is used as a data logger this address will have no effect on the system and another SDI-12 sensor may have this same address.

SDI Measurement Time
The measurement time is calculated by the system and is the time required to make all the measurements requested. This time is dependant on how many parameters are used and what they are. The SDI-12 specification indicates the time may be from 0 to 999 seconds. This time is reported to the data logger when the data logger requests a sensor measurement.

Par 1-9 Source
Up to nine values may be defined to be measured and sent to the data logger. The default parameters are initially disabled, set to None. The standard input source options are available except the SDI-12 sources, time and date. Available options are listed below.

None	This parameter is not used, and all following parameters are ignored.
Counts	Use the summation count value for this parameter.
TotCnt	Use the total count value for this parameter.
AnaX	Use analog channel X for this parameter.
DigI/OX	Use digital I/O X for this parameter.
Freq	Use the frequency reading for this parameter.
Encoder	Use the encoder input value for this parameter.
Batt	Use the Battery reading for this parameter.
TScans	Use the total number of scans for this parameter.
RsrvdX	This parameter is reserved for future use and is not valid at this time.
FNT01 to FNT40	Use the selected user defined math function result for this parameter.

System Configuration Options
These options are used to save and retrieve setup information, and to reset the unit back to the factory defaults. Once a system is configured it is best to save the setup information so that it may be retrieved later if the system is replaced or duplicated.

System Setup ->	System Config Opts->	Copy Setups to Mem ?
	|	Copy Setups to Card?
	|	Load From Memory ?
	|	Load From Card ?
	|	Reset to Defaults ?

Copy Setups to Mem?
This option is used to save a copy of the setup information to the internal data card. The setup information will be saved in a file with the same file name as the Site ID option and a file extension of .CFG. This file may be transferred over the serial port using the standard file transfer options, or copied to the external card using the copy data option.

Copy Setups to Card?
This option is used to save a copy of the setup information to the external data card. The setup information will be saved in a file with the same file name as the Site ID option and a file extension of .CFG. The data card can then be removed and placed in a PC and the file copied to the hard drive or printed for a hard copy of the setup information.

Load From Memory?
If a configuration file is stored on the internal memory, this option is used to load those options back into the system.

Load From Card?
If a configuration file is stored on the external data card, this option is used to load those options back into the system. Several configuration files can be saved to a single card.

Reset To Defaults?
This option is used to reset all the user options back to the factory default value. Be careful using this option as all setups will be cleared. This will not affect data stored to the FLASH card, nor time and date values.

Update Firmware?
This option is used to update the operating system firmware. As new versions of software are produced, they will be placed on the web under the www.waterlog.com web page. Users can download new versions of software to an ATA data card and using this menu update the system firmware. With the ATA data card in the card slot, press the ENTER key to start the update process. The system will make sure logging is not on, then start a special loader program that will look for the update file on the card and display its filename. If the filename is correct then press the ENTER key again to start the update process. If there are other files on the card, use the UP and DOWN ARROW keys to select the correct file, then press the ENTER key to select the displayed file.

3.11 System Status

The following menu structure represents all the sub menus under the "System Setup" header.

System Status ->	Battery = 12.3 Volts
	Min Battery = 11.6
	Max Battery = 13.7
	System Resets = 2
	Reset Stat Screens ?
	Firmware Ver = X.XXX
	Run Checksum Test ?
	Serial # = S#XXXXXX

Battery = 12.3 Volts
This screen displays the current voltage on the H-500XL™'s +12V input.

> **OPERATIONAL NOTE:**
> The display draws more than 300mA, which will pull extra current from the battery and may cause the reading to be lower than if the battery is measured with a meter while the H-500XL™ is turned off.

Min Battery = 11.6
Each time the H-500XL™ measures its battery voltage it updates as needed the minimum and maximum measured battery readings. Note that the battery voltage may dip down and come back up between battery measurements and the dip would not be recorded here. This value is mainly provided as a diagnostic tool to help understand system performance and reliability. See 'Reset Status Screens?' below for more information.

Max Battery = 13.7
Each time the H-500XL™ measures its battery voltage, it updates as needed the minimum and maximum measured battery readings. Note that the battery voltage may rise up and come back down between battery measurements and the rise would not be recorded here. This value is mainly provided as a diagnostic tool to help understand system performance and reliability. See 'Reset Status Screens?' below for more information.

System Resets = XX
This is a status screen that lists how many times the system has reset. A reset can be caused by several conditions, low battery and power spikes or glitches, are the most common. See 'Reset Status Screens?' below for more information.

Reset Stat Screens ?
This option is used to reset the minimum and maximum battery values to the current battery value and to reset the system reset counter to 0. The intended use of this option, the battery value screens and the system reset screens is to provide information on how the system is operating between field trips. The normal use is to reset the status screens at the end of a field trip, and then one of the first tasks of the next field trip would be to view these screens to see if any unexpected conditions occurred since the last trip.

Battery Condition	System Resets	Possible Problems	Action
Battery Level = Ok Min Batt Level = Ok Max Batt Level = Ok	None	None, System is operating normally.	None
Battery Level = Ok Min Batt Level = Low Max Batt Level = Ok	None	The minimum battery value may indicate the charging system was not operational for awhile.	Make sure the solar panel is clean. If it is normally cloudy for several days, may need a bigger battery, or solar panel.
Battery Level = Ok Min Batt Level = Low Max Batt Level = Ok	Some	Low battery caused system resets.	Make sure the solar panel is clean. If it is normally cloudy for several days, may need a bigger battery, or solar panel.
Battery Level = Ok Min Batt Level = Ok Max Batt Level = High	None	Charging system may be outputting too much voltage.	Make sure regulator is functioning properly. Overcharging the battery will damage the battery.

Firmware Ver = X.XXX
This is a status screen that displays the current software version of the embedded code. When calling the factory for assistance the technician may ask what version of code your unit has installed. This will aid the technician on how to better serve you. Also after doing a field upgrade it is a good idea to come here and verify the update process was completed as expected.

Run Checksum Test?
The H-500XL™ can perform a checksum test on the firmware and display a Pass/Fail response. If the checksum fails, something has corrupted the firmware. In this case, you may need to download the firmware from a FLASH Memory Card to restore the integrity of the system. This test is normally used after a system update to make sure the new software is running properly. Consult the factory if this test persistently fails.

Serial # = S#XXXXXX
This shows the instrument serial number. You may be asked to provide a serial number if you ever call in for technical assistance. This should be the same number as on the serial label on the side of the unit, yet the label may have worn off, or became hard to read.

3.12 Accessory Setup

The following menu structure represents all the sub menus under the "Accessory Setup" header. This normally includes accessory equipment that is not a standard input (sensor) or output device (data card or GOES radio).

Accessory Setup ->	Gas Purge Setup ->

← H-355 Gas Purge system menu options are explained in detail in a later chapter.

Gas Purge Setup
When the H-500XL™ is connected to an H-355 Gas Purge system, this menu will allow you to change the configuration in the H-355 from the H-500XL™ keypad. The H-355 settings are explained in Chapter 6. These options can be edited by using the normal editing technics of the H-500XL™.

Chapter 4
Remote Operation (Menu Mode)

4.1 Remote Menu Interface

All communications with the H-500XL™ are through a command interface using the RS-232 1 Serial Port. Note that a NULL modem connector must be used between the computer cable and the H-500XL™. The "MENU" command is used to display a menu on the screen allowing easy human access to the system options. To access the command interface, the H-500XL™ must be connected to a computer that is running some type of terminal program. The terminal program must use the same communication settings as used by the H-500XL™ .The default H-500XL™ communication settings are shown below along with other valid options.

COMMUNICATION SETTING	DEFAULT H-500XL™ SETTING	OTHER H-500XL™ OPTIONS
BAUD RATE:	9600	(300 to 19200)
DATA BITS:	8	
STOP BITS:	1	
PARITY:	None	
DUPLEX:	Full	
TERMINAL EMULATION:	VT52	VT100
FLOW CONTROL:	Software (Xon / Xoff)	None or Hardware

Basically all options available through the menu interface are also available using the built in keyboard and display, and through the command interface. This chapter focuses mainly on the operation of the menu interface. A more detailed description of the different options is given in chapter 3.

When the computer is connected and ready to communicate, (direct connection or through a modem) pressing the ENTER Key a few times will cause the command interface prompt to be displayed. This prompt is an arrow "->" on the left side of the screen. It may take a couple of key presses to "wake up" the H-500XL™. Once the prompt is displayed the H-500XL™ is ready to receive commands. If no commands are received in a five minute time period the H-500XL™ will turn off automatically, returning to a low power mode. At the command prompt, enter the command "MENU" and the main remote menu will be displayed.

4.2 General Operations

Each option is preceded with a letter or number that when pressed will activate the indicated option. The ENTER Key **does not** have to be pressed after each option key is pressed. Some options open sub menus and others are used to set or change system parameters. When in a sub menu pressing the ESC Key will back up one menu. If at the top or main menu the ESC Key has no effect. Pressing the ENTER Key or SPACE Key at any time will refresh the current screen.

At the bottom of each menu screen is an "`Enter Option ->`" prompt. When an option key is pressed it allows a system parameter to be changed, any additional help information for that option will be displayed after the prompt. There are two main types of system parameter change options, first is an option that requires direct keyboard input like a file name or a column header label. The second is an option that has a limited set of valid options like an input source option. This second type of option uses the up and down arrow keys to move up and down through the valid options. Each option should be self evident on how to edit the option.

4.3 Main Menu Screen

The following shows what the "Main Menu" screen looks like.

```
H-500 XL Main Menu

V - View Status
I - Sensor Input Options
D - Data Options
O - Output Options
S - Scan Options
C - Configure System
A - Accessory Setup
X - Exit

Enter Option >
```

Each option in the main menu is a link to a submenu.

V - View status: Displays basic system status information.

I - Sensor Input Options: Used to configure the built in as well as the external sensors.

D - Data Options: Allows the user to retrieve data from the unit.

O - Output Options: Defines how the data is stored, transmitted or displayed.

S - Scan Options: Defines how often and when the unit scans the sensors.

C - Configure System: Sets basic system options like time and date.

A - Accessory Setup: Configures accessories like the H-355.

4.4 V - View Status Screen

The following shows what the "View Status Submenu" screen looks like. This screen is provided to simply view the current status of basic set ups and measurements.

```
View Status Submenu    (Esc to Return)

Rain  =  0.00              Time:        HH:MM:SS
N/A                        Date:        MM/DD/YY
N/A                        Scanning:    Off
N/A                        Next Scan:   HH:MM:SS
N/A                        Logging:     On
                           GOES Mode:   Off
Battery:        12.2       Site ID:     Site_ID
Batt Max:       12.8       Serial #:    S#001006
Batt Min:       12.1       Version:     1.12
System Resets:  000        Checksum:    Pass

M - Measure
C - Checksum Test
R - Reset Batt Max, Batt Min, & System Resets

Enter Option >
```

User Definable Status Values:
The left side of the screen shows the five user definable status values. The example above shows Rain only. The other four definable screens were not used in this example. The five user definable status are initially disabled.

Battery:
There are three battery voltages listed, the current battery voltage, the minimum and maximum battery voltage. The minimum and maximum values are mainly listed for diagnostic reasons. If the minimum voltage is too low it may indicate the battery is being under charged. It could also cause system resets if too low. See the "R - Reset Batt Max, Batt Min and System Resets" option below for more information on these status values.

System Resets:
This screen shows how many times the system has reset. See the "R - Reset Batt Max, Batt Min and System Resets" option below for uses of this status value.

M - Measure:
This option is used to force the unit to scan and display the same sensors that are defined on this screen as the "Status Values". This will not cause the data to be logged to the card, but only to be displayed here.

C - Checksum Test:
This option is to verify that a firmware update was completed error free.

R - Reset Batt Max, Batt Min, & System Restarts:
This option resets the Max and Min Battery voltage values to the current battery voltage, and the number of system resets to zero. When servicing a site, before leaving use this option to reset the battery values to the current battery value, and the number of system resets to zero. Now on the next visit review the condition of the battery since the last visit by looking at the max and min values, and if the system ever reset. The hope is the resets is still zero and the max and min battery values are in a normal operating range. A low min battery voltage could indicate a weak charging system, a battery too small for the site or bad wiring, etc. A low battery could also cause the system to reset. A high maximum battery voltage could indicate the regulator is bad and passing all the energy from a solar panel to the system. If the system has reset it is normally a power problem with the battery voltage being too low or bad wiring or poor connections. Lightening and other external factors can also cause the system to reset.

Time:	This is the current system time.
Date:	This is the current system date.
Scanning On:	This status display indicates if scanning is enabled.
Next Scan:	This is a count down timer to the next scan.
Site ID:	This acts as a Site ID for the system and is used as the filename for logged data.
Logging:	This indicates if logging is enabled.
GOES Mode:	This identifies the GOES Mode; options are: Off, Self Timed, Random, or Both. If no radio is connected then N/A will be displayed.
Version:	This is the current version of the firmware used by the system.

If more data is defined than will fit on the screen, two columns will be used to display the data. If this still is not enough, a message at the bottom of the screen, **"More Data Available"** will be displayed indicating more data is available to be displayed. Pressing any key will display the remaining data.

The ESC Key will cause the "Main Menu" to be redisplayed.

4.5 I - Sensor Input Options Screen

The following shows what the "Sensor Input Options" screen looks like.

```
Sensor Input Options  (Esc to Return)

Counts (Int):    0.00
Total Counts:    0.00
Frequency:       0.00

Digital I/O #1: 1  (Digital Input)
Digital I/O #2: 1  (Digital Input)

Analog 1: 0.257       Analog 3: 0.508
Analog 2: 0.201       Analog 4: 0.175

C - Counter / Frequency  Setup
D - Digital I/O Setup
A - Analog Input Setup

G - Generic SDI-12 Options

Enter Option >
```

4.5.1 C - Counter / Frequency Setup

This option starts a menu used to configure the event counter and the frequency counter input.

```
Counter, Frequency Setup   (Esc to Return)

C - Counts (Int): 0.00
T - Total Counts: 0.00
S - Slope:        0.01
I - Cnt Interval: Daily
M - Counter Mode: Off
R - Reset Counters

Frequency:        0.00
F - Freq·Slope:   1.0000
O - Freq Offset:  0.0000

Enter Option >
```

C - Counts (Int):
This is the total counts for the current count interval or since the counters were last reset, whichever occurred last. The counter interval value may be set by the user allowing the user to add an offset, or to reset the counter back to some value after the user activated the input for test purposes, such as testing a tipping bucket rain gauge. This counter does not reset to zero when logging is started.

T - Total Counts:
This is the total counts since the counters were last reset. This value may be set by the user. For example, if the unit was installed in the middle of a water year, this value can be set to

the amount of rain received so far for the current water year. This counter does not reset to zero when logging is started.

S - Slope:
This sets the counter slope. The default is 0.01 for use with most tipping bucket rain gauges.

I - Count Interval:
This option is used to set the count interval, or the interval after which the counts value will be reset to 0.00. Valid options are daily, hourly, and every scan. The default is daily.

M - Counter Mode:
The default counter mode is Off. The counter mode can also be set to "Count Only" and to "Cnt & Txd". If set to Off, the counters will be disabled. If set to "Count Only," both counters will be enabled. If set to "Cnt & Txd," the counters will be enabled and if the ALERT Radio is enabled, the system will see if an ALERT transmission should be sent based on the count value. Once enabled, the counters will be active even if scanning is turned off.

R - Reset Counters:
This option resets both counters to 0.00. The user may also enter a starting (offset) value for each counter. The counters are not reset when scanning is turned on.

F - Frequency Slope:
This is the first term in the equation: value = Frequency * Slope + Offset. Also see the frequency offset below for additional information on the frequency value.

O - Frequency Offset:
This is the final term in the equation: value = Frequency * Slope + Offset.

NOTE: The offset is only applied if the input frequency is not 0.0. The frequency input is normally used for wind speed sensors, and the offset value is a low number that represents the drag of the sensor. If there is no wind meaning the raw frequency input is 0.0, the reported value should be 0.0 and not the offset, therefore the offset is not applied.

4.5.2 D - Digital I/O Setup

The sub menu here will allow the user to configure the digital I/O section of the H-500XL™. This includes defining the pin as an input or an output and how it will controlled.

```
Digital I/O Setup      (Esc to Return)

    Digital I/O #1 = 1
A - I/O Mode       = Digital Input
B - Trigger When   = 0
C - Pulse Length   = 1000 ms
D - Warm Up Delay  = 250  ms
1 - Test Output 1

    Digital I/O #2 = 1
E - I/O Mode       = Digital Input
F - Trigger When   = 0
G - Pulse Length   = 1000 ms
H - Warm Up Delay  = 250  ms
2 - Test Output 2

V - Encoder Value  = 0.000
S - Encoder Slope  = 0.010

Enter Option >
```

Digital I/O #1:
This is a status screen showing the current state of the digital I/O pin. A 1 indicates it is high or at 5 volts, and a 0 indicates it is low or at 0 volts.

A - I/O Mode:
This option is used to define if the digital I/O pin should be an input or an output. If it is an output, then if it is pulsed or a continuous output.

B - Trigger When:
This is a logical expression used to control the pin when used as an output. For example, an expression like "counts>2.0" would cause the pin to go high (5 volts) if the counts was greater than 2.0 and to go low (0 volts) if the counts was less than 2.0. This is only valid if the pin is configured for an output.

C - Pulse Length:
If the pin is configured for "pulsed output," this option sets the pulse length in milliseconds. The range is 1 to 9999 for 1 millisecond to 9.999 seconds.

D - Warmup Delay:
The pin may be configured to turn on automatically for every scan. This option sets a delay time after this pin goes high and before other processes continue. The range is 1 millisecond to 9.999 seconds. An example of using this option could be a motor that needed to be turned on every scan that required a delay of 2 seconds before actually scanning the sensors, this option would be set to 2000 for this example.

1 - Test Output 1:
When the pin is configured as an output, pressing the '1' key will activate the pin for testing purposes. If the pin is configured for pulsed output, then the output will turn on for the defined pulse length and then turn off again automatically. If the pin is configured for continuous operation, pressing the '1' key will cause the output to toggle between a high and a low based on the current state. If it is high it will go low, and if it is low it will go high.

V - Encoder Value:
When both digital I/O pins are configured as inputs, they may be used to read a quadrature shaft encoder. The value of the shaft encoder will be displayed here. The value may also be edited by the user to set the value to some reference point.

S - Encoder Slope:
Most shaft encoders will have 100 counts per revolution. This equates to 0.01 foot per count when using a 1 foot pulley, or a slope of 0.01. The slope may be changed to match different pulley sizes or to change from feet to some other desired unit.

4.5.3 A - Analog Input Setup

The sub menu here allows the user to select an input range, slope and offset for each generic analog input.

```
Analog Input Setup    (Esc to Return)

Analog 1: 0.2579   Analog 2: 0.2014   Analog 3: 0.5074   Analog 4: 0.1753
A - Slope:  1.000  D - Slope:  1.000  G - Slope:  1.000  J - Slope:  1.000
B - Offset: 0.000  E - Offset: 0.000  H - Offset: 0.000  K - Offset: 0.000
C - Range:  5.0 V

Enter Option >
```

A - Slope:
There is a slope and offset coefficient for each analog input channel. Pressing the A key allows the slope for analog channel 1 to be edited. Use the indicated key for the other channels. The value for the analog channel will be raw volts (0 to 5) multiplied by the slope, then added to the offset.

B - Offset:
This is the offset coefficient for analog input channel number 1. Pressing the B key allows this offset to be edited. Use the indicated key to set the offset for the other channels. The value for the analog channel will be raw volts (0 to 5) multiplied by the slope, then added to the offset.

C - Range:
Channel one is the only analog channel that has two input ranges, a 0 to 5.0 volt range and a 0.0 to 0.50 volt range. If the output of a sensor is going to be equal to or less than 0.50 volts use the 0.5 volt range, otherwise use the 5.0 volt range. Do not directly connect sensors that will output more than 5.0 volts to the analog inputs.

4.5.4 G - Generic SDI-12 Options

The following shows what the "SDI-12 Options" screen looks like. This screen is used for interacting with SDI-12 Sensors.

```
Generic SDI-12 Options   (Esc to Return)

T - Test Address: 0
A - Acknowledge
I - Identify
V - Verify
M - Measure
D - Data Retrieval
S - Send Extended
E - Edit Extended:

Enter Option >
```

T - Test Address:
This is the SDI-12 address that will be used when any of the commands are sent to connected sensors. This allows a single key press to send any of the standard SDI-12 commands. If "0" was used as the Test Address, all SDI-12 commands would be directed to the "0" addressed sensor.

A - Acknowledge:
This command sends the address followed by the "!" terminator. The normal response is the sensor address followed by a Carriage Return, Line Feed. If the sensor is not connected or does not respond, the H-500XL™ will respond with, "Sensor not responding" or "Time out." Refer to sensor manufacturer for proper response to Acknowledge Command.

I - Identify:
This command sends the address followed by "I!", the standard SDI-12 identify command. The normal response is the sensor address followed general information about the sensor like version levels, manufacture, etc., all followed by a Carriage Return, Line Feed. If an error has occurred, the H-500XL™ will respond with "Sensor not responding" or "time out." Refer to sensor manufacturer for proper response to Identify Command.

V - Verify:
This command sends the address followed by "V!", the standard SDI-12 verify command. The normal response is sensor specific information like memory test results followed by a Carriage Return, Line Feed. If an error has occurred, the H-500XL™ will respond with "Sensor not responding" or "time out." Refer to sensor manufacturer for proper response to Verify Command.

M - Measure:
This command sends the address followed by "M!", the standard SDI-12 measure command. If an error has occurred, the H-500XL™ will respond with "Sensor not responding" or "time out." Refer to sensor manufacturer for proper response to Measure Command.

D - Retrieve Data:
This command sends the address followed by "D0!", the standard SDI-12 data retrieval command. Executing this command prior to a completed measurement will abort the sensor measurement. If an error has occurred, the H-500XL™ will respond with "No Response." Refer to sensor manufacturer for proper response to this Command.

S - Send Extended Cmd:
This command sends the address followed by the user entered text in the "Edit Extended Cmd" option, all followed by "!", the standard SDI-12 command terminator. If an error has occurred, the H-500XL™ will respond with "Sensor not responding" or "time out." Refer to sensor manufacturer for proper response to Extended Command.

E - Edit Extended Cmd:
This options is used to enter a non standard SDI-12 command to be sent to the sensor. The address MUST NOT be included in this text and the command terminator "!" is optional, they are added automatically.

4.6 D - Data Options

The following shows what the "Data Options" screen looks like:

```
Data Options            (Esc to Return)

Internal Data Status: Ok ( 0.0% Full)
Data Card Status:     Ok ( 0.0% Full)

C - Copy Data To Card
T - Transmit Data
N - Transmit New Data
E - Erase Data Card
I - Erase Internal Data
D - Directory Of Files

Enter Option >
```

C - Copy Data to Card:
This will copy all the data internal to the unit to the external data card. The message "Copying files, Please Wait..." will be displayed during the process. Do not remove the data card while this message is displayed. When the copy process is complete the message will be removed indicating it is safe to remove the data card.

T - Transmit Data:
This option allows the user to select a file to transmit over the RS-232 port. Another menu will first appear asking if the file is in internal memory or on the external data card. After selecting the data source a list of files is displayed. If there are more files than can be displayed on one screen then pressing the "M" key will cause more files to be listed. Use the up and down arrow keys to select the file to transfer. The next option is if the file will be transferred as a straight ASCII file dump or if the XMODEM file transfer protocol should be used. The XMODEM protocol eliminates transfer errors.

N - Transmit New Data:
This option automatically transmit a special file with the '.NEW' extension. This file contains data that has not been transmitted before.

E - Erase Data Card:
This option allows the user to erase all the data on the external data card. When this option is selected the user is asked if they want to proceed with the erase operation. Pressing any key but the "Y" will abort the erase process.

I - Erase Internal Data:
This option allows the user to erase all the internal data. When this option is selected the user is asked if they want to proceed with the erase operation. Pressing any key but the "Y" will abort the erase process.

D - Directory Of Files
This option will list all the files on either the internal or external data card. The file size and creation date will also be displayed.

Data Files:
Data files on the internal data card will have a number extension of .000 to .099. As data files are copied to the external data card the extension will change to letter followed by the old extension number .A00, .A01 etc. If the file already exists on the external data card the letter is increased by one character value.

Configuration Files:
Configuration files will have a .CFG file extension. The file name will be the same as the site ID of the unit the file was created with. Configuration files may also be edited and renamed on a PC, then copied back to a data card.

.NEW File
The .NEW file is created if the "Log .NEW File" option is set to Yes. The .NEW file will contain the same data that is in the main data file, but this file can be automatically transmitted and erased by using the DUMPNEWDATA and ERASENEWDATA commands in the command mode. This file will automatically be recreated again on the next scan. See the section below under logging options for more information on the .NEW file.

.BIN Files
Firmware upgrades will be binary files with a .BIN extension. The file name will normally be "500XLvvv.BIN" where vvv is the version number of the firmware.

NOTE: The H-500XL™ does not support subdirectories and other file operations available on a PC. Data cards used in a PC should not be set up with subdirectories or have individual files erased or deleted as some PC systems may try to create a recycle folder which would be considered a subdirectory. Format the cards on the H-500XL™ and not on a PC as the PC may use a different file structure than what is optimal for the H-500XL™.

4.7 O - Output Options

The following shows the "Output Options" screen. Most of the options in this menu have sub menus used to setup selected option.

```
Output Options        (Esc to Return)

L - Logging Options
G - GOES Radio Options
R - Remote Display Options
V - Voice Modem Options
A - Alert Radio Options
E - Email Options
F - 4-20 MilliAmp Output Options
P - Auto Print: Off

Enter Option >
```

4.7.1 L - Logging Options

The logging options are used to determine how the data will be stored on the FLASH Card. The following shows the "Logging Options" screen. Notice the brackets around to 01 for column one indicating any changes will apply to column one only.

```
Logging Options       (Esc to Return)

L - Logging: On
N - Use .NEW File: No

Column          | [01]        02          03          04          05
----------------|-------------------------------------------------------
S - Source:     |  Date       Time        Batt        None        None
H - Header:     |
R - Skip Rate:  |  1          1           1           1           1
D - Digits:     |  2          2           1           2           2
F - Function:   |  NOW        NOW         NOW         NOW         NOW

-> - Next
<- - Previous

Enter Option >
```

L - Logging:
This is a global enable option allowing logging to be switched on and off without having to change any other logging option. The following options allow the user to define how the scanned data will be stored in memory.

N - Use .NEW File:
There are some applications that will be set up to automatically download data from the H-500XL™ over the serial port via a modem or other type of communication equipment. For applications like this the H-500XL™ can be setup to log data to a special file called a .NEW file. In this case data will be stored in both the main file and in the .NEW file. Now a PC or other device can be programmed to collect data from the H-500XL™ by issuing the command "DUMPNEWDATA" and the data in the .NEW file will be transmitted to the system issuing the command. The .NEW file will be terminated with 3 NULL characters making it easy for the other system to detect the end of the file. At this point the system issuing the commands could send an "ERASENEWDATA" command to delete the .NEW file. On the next scan the .NEW file would be created again and the new data would be placed in it. The system issuing the commands could be setup to automatically collect the data as often as needed. The new data could also be retrieved manually by the user.

The H-500XL™ will continue to place data in the .NEW file until told to erase it. If during the data transfer a break in the communications happens, all of the data may not have been transferred and the erase command would not be received by the H-500XL™. This two command approach protects the user from a loss of data as the data may be retrieved in full during the next transfer.

If multiple users are looking at the .NEW file it will take some coordination on there part on who will be erasing the .NEW data file.

Without the use of the .NEW file the user would have to retrieve the main data file which would become larger as time passed causing the transmission to become exceedingly long and the user would have to deal with data that has already been transmitted before.

S - Source:
This selects what input will be used to provide data to this column. Options include Date, Time, Batt, SDI-12 inputs, etc. If "None" is selected then that column and all subsequent columns are disabled.

H - Header:
This allows the user to enter a label for each column. For example "Rain(in)" or "Temp C". The label will be used to identify the data as it is displayed using other options. For example the label will be printed at the top of the columns as the data is stored to the data card. The bottom of this screen shows all the defined labels for all columns enabled.

R - Skip Rate:
This is the column skip rate. This determines if the data will be logged every scan or every Nth scan. If the skip rate causes data to be logged at a different rate than the scan rate then a TAB character will be inserted in the data file for this value.

D - Digits:
This sets the number of digits to the right of the decimal that will be logged with the data value. This has no affect on Date, and Time functions.

F - Function:
Column functions are used to perform mathematical operations on the data logged in the data file. These operations are based on all the data scanned for that column since scanning was turned on or based on the skip rate. Column functions that end in "_T" are based on the total data set, and functions that end in "_S" are based on the data scanned during a specific skip rate period.

Now: This is the default setting. This will take the last scanned value for this column and log it into the data file. This is not affected by the skip rate setting.

Avg_S: This will average X number of scanned values for this column and log the results. The value of X is the skip rate. Lets say the scan rate is every 15 minutes and one column is set up to log the temperature from a sensor connected to analog channel 1 with a skip rate of 1, and a column function of NOW. And a second column is setup to log data from the same sensor but the skip rate is set to 96, and the column function is set to AVG_S. The first column will log the current temperature every 15 minutes. The second column would average 96 readings and log the results once a day since there are 96 scans in a day scanning at a rate of 15 minutes.

Max_S: This will find the maximum value scanned out of the last X number of scanned values for this column and log the results. The value of X is the skip rate. Continuing on with the example for the Avg_S function, lets say another column is set up to log the temperature from the same sensor connected to analog channel 1 with a skip rate of 96, and a column function of MAX_S. This column will log the maximum temperature for the day.

Min_S: This will find the minimum value scanned out of the last X number of scanned values for this column and log the results. The value of X is the skip rate. Continuing on with the example for the Avg_S function, lets say another column is set up to log the temperature from the same sensor connected to analog channel 1 with a skip rate of 96, and a column function of MIN_S. This column will log the minimum temperature for the day.

Sum_S: This will add up the last X values scanned for this column where X is the skip rate. For example, lets say there are two columns set up to report counts. The first is set up to report counts on every scan and the second is set with a skip rate of 96 so it will report only once a day with a total count for that day.

Avg_T: This will average every scan regardless of the skip rate. When the value was logger would be based on the skip rate. Lets say the scan rate is every 15 minutes and one column is set up to log the water level of a lake with a skip rate of 1, and a column function of NOW. A second column is setup to log the same data but the skip rate is set to 96, and the column function is set to AVG_T. The first column will log the current lake level every 15 minutes. The second column would log a value once a day because the skip rate is set to 96, but the value would be the average water level since scanning was turned on. Every scanned value since scanning was turned on would be used to calculate this average.

Max_T: This would find the maximum data value scanned since scanning was turned on regardless of the skip rate. When the value was logged would be based on the skip rate. Lets say the scan rate is every 15 minutes and one column is set up to log the water level of a river with a skip rate of 1, and a column function of NOW. A second column is setup to log the same data with a skip rate of 1, and the column function is set to MAX_T. The first column will log the current river level every 15 minutes. The second column would log the maximum value scanned since scanning was turned on also every 15 minutes. This data value would be like a crest gage reading showing the highest water level since scanning started.

Min_T: This would find the minimum data value scanned since scanning was turned on regardless of the skip rate. When the value was logged would be based on the skip rate. Lets say the scan rate is every 15 minutes and one column is set up to log the battery voltage with a column function is set to MIN_T. The column would log the maximum battery value scanned since scanning was turned on. The logged value would be the lowest value scanned on the 15 minute interval bot could be logged at a slower rate by adjusting the skip rate value.

Sum_T: This will add up all the values scanned for this column since scanning was turned on regardless of the skip rate. When the value was logged would be based on the skip rate.

-> - Next:
This advances the screen to the next column. If on the last column then this option has no effect.

<- - Previous:
This reverses the screen to the previous column. This option has no effect if on the first column.

4.7.2 G - GOES Radio Options

Chapter 5 is dedicated to the operation of the GOES radio system so the explanations here will be brief and geared towards the menu mode of operation. The first GOES menu is used to select the type of GOES radio that will be used. This is important as the H-500XL must know this in order to communicate with it. Once the radio type is selected press the 'G' key to see the main GOES menus.

```
GOES Radio Type Options     (Esc to Return)

T - Radio Type:     SE-100
G - Goto Main GOES Menu

Enter Option >
```

4.7.2.1 G - GOES Main Menu

The following shows the "GOES Radio Option" screen. These options are used to set up both self timed and random transmissions.

```
GOES Radio Options     (Esc to Return)

M - Mode:      Off
A - Address:   12345678
T - Time:      01:10:38
P - Preamble:  Short
S - Self Timed Options
R - Random Options

Enter Option >
```

M - Mode:
This is the GOES Radio mode of operation. Options include Off, Self Timed Transmissions Enabled, Random Transmissions Enabled, and both enabled. This option should only be turned on after the other GOES options are set as desired.

A - Address:
This is the 8 digit DCP address assigned by NESDIS.

T - Time:
This is the DCP time used for radio transmissions. This time must be set to international standard time. The data logger time clock is separate from this time clock and is normally set to local time.

P - Preamble:
At the beginning of a transmission, a preamble signal is sent to the satellite. The preamble is a carrier signal only lasting for about 1 second for a short preamble to about 7 seconds for a long preamble. The long preamble cuts down on the amount of data that can be transmitted. On the Signal Engineering radio the long preamble is only valid for 100 baud transmissions.

4.7.2.1.1 Self Timed Options

This screen shows the "Self Timed Transmissions" options:

```
Self Timed Options     (Esc to Return)

C - Channel Number:          000
R - Transmit Rate:           04:00:00
O - Offset Time:             00:00:00
W - Self Timed Window:       1 Min
B - Self Timed BaudRate:     100
F - Data Format:             SHEF
D - Data Order:              SCAN
N - Data Sent First:         Newest
H - Send SHEF Headers:       No
A - Append 1 Battery Scan:   No
S - Scans Per Transmission:  32
T - Transmit Options
V - View XL Buffer Data
X - Force ST Transmission:   NOTE: Disconnect Antenna,
Connect to Dummy Load

Radio Buffer Byte Count: 0
XL Buffer Byte Count:    32 of 550 Bytes Max
Actual Transmit time:    4 Seconds

Enter Option >
```

C - Channel Number:
This is the Self Timed channel number assigned by NESDIS.

R - Transmit Rate:
This is the transmit rate assigned by NESDIS.

O - Offset Time:
This is the transmission time relative to midnight. This is assigned by NESDIS. This must be less than the transmit rate value.

W - Self Timed Window:
NOAA will assign a window length indicating how much time is allowed to transmit data. The default is a 1 minute window. The options range from 1 minute to a 5 second window.

B - Self Timed Baud Rate:
This option is used to set the baud rate for the Self-Timed transmissions. This may be different than the random transmission baud rate. This option is dependent on the radio type and will be 100, 300 or 1200 baud. This will also be assigned by NESDIS.

F - Data Format:
Self-Timed transmission data format can be either SHEF or binary. SHEF format uses plain ASCII text and is easily readable, but it takes longer to transmit. Binary data is transmitted quicker, but the data will need to be decoded before it can be used. If more data is required, then a binary format should be used. Refer to the GOES Data Format section for details on the data format. This option should not be edited while scanning and GOES are enabled.

D - Data Order:
This option defines if data will be sent based on each line representing a single scan (Scan Order) or each line representing a single channel (Channel Order). Scan Order is the default.

Scan Order: Each line of data represents one scan and one value from each defined input.

HG TA VB 18.34 22.78 12.45 18.76 22.45 12.44 18.97 22.15 12.45 19.43 22.02 12.45	SHEF headers are turned on. Stage, Temp, and Battery values in each line. Each line is a different scan at some defined time interval.

Channel Order: Each line represents all the data from a single sensor.

HG 18.34 18.76 18.97 19.43 TA 22.78 22.45 22.15 22.02 VB 12.45 12.44 12.45 12.45	Each line has data from a single sensor. Each value in the line is scanned at different times based on scan rate.

N - Data Sent First:
This options selects between newest data being transferred first or oldest data being transferred first, (ascending or descending data). The default is 'Newest' data first.

H - Send SHEF Headers:
The SHEF code for each data value may be defined by the user. This is normally a two character entry that represents the data values.

A - Append 1 Battery Scan:
This option, if set to "Yes" will send one battery reading at the end of each transmission.

S - Scans Per Transmission:
This option indicates how much data should be sent in each transmission. The default is 16 scans per transmission. When using other default values of a 4 hour transmission and a scan rate of 15 minutes, the 16 scans includes all the data for that 4 hour time period. If this option is set to 32 then one set of redundant data would also be sent.

T - Transmit Options
This screen shows the "Self Timed Transmit Options":

```
ST Transmit Options    (Esc to Return)

Column          | [01]        02          03          04      -   05
----------------|-------------------------------------------------------------
S - Source:     |  None       None        None        None        None
C - SHEF Code:  |
R - Skip Rate:  |  1          1           1           1           1
F - Format:     |  XX.XX      XX.XX       XX.XX       XX.XX       XX.XX

-> - Next
<- - Previous

Enter Option >
```

S - Source:
This selects what input will be used to provide data to this column. Options include Date, Time, Batt, AnaX, Counts, SDI-12 inputs, etc. If "None" is selected then that column and all subsequent columns are disabled. Normally date and time are not used for GOES data.

C - SHEF Code:
This allows the user to enter a SHEF code for each column. For example "HG"for stage or Gauge Height, and "TA" for Air Temperature Ambient. The code will be used to identify the transmitted data. This allows for easier decoding of the data.

S - Skip Rate:
This is the column skip rate. This determines if the data will be logged every scan or every Nth scan. If the skip rate causes data to be logged at a different rate than the scan rate then a TAB character will be inserted in the data file for this value.

F - Format:
This options determines how many digits to display before and after the decimal point. This is only valid when data is transmitted using the SHEF (ASCII) data format.

-> - Next:
This advances the screen to the next column. If on the last column then this option has no effect.

<- - Previous:
This reverses the screen to the previous column. This option has no effect if on the first column.

V - View XL™ Buffer Data:
There is a data buffer in the H-500XL™ that holds the data that will be sent to the GOES Radio. This buffer can be viewed at any time to see that the data is looking as expected. If the radio is not enabled then the viewed data will be a series or slashes "/" representing the

data format. When the radio is turned on and scanning is started the slashes will start to be replaced with real data. Viewing the data buffer now will show the real data values. This is an easy way to see if the data format and other setup information is correct.

X - Force ST Transmission:
This option is used to force a transmission of the data in the self timed buffer. This is normally only done for test purposes. Note that the antenna should be disconnected from the system and a dummy load used in place of the antenna. This will allow the system to be tested with a watt meter etc, without stepping on other users of the same channel. If the antenna is left connected, then the channel number should be changed to a random channel.

4.7.2.1.2 Random Options

This screen shows the "Random Transmissions" options:

```
Random Options          (Esc to Return)

C - Channel Number:  000
R - Transmit Rate:   00:00:00
B - Random BaudRate: 100
A - Alarm Condition: 0
T - Transmit Options
F - Force Random Transmission

Buffer Byte Count:  0

Enter Option >
```

C - Channel Number:
This is the random channel number assigned by NESDIS.

R - Transmit Rate:
This is the random transmit rate. This is the interval rate between random transmissions.

B - Random Baud Rate:
This option is used to set the baud rate for the random transmissions. This may be different than the Self-Timed transmission baud rate. This option is dependent on the radio type and will be 100, 300 or 1200 baud. This will also be assigned by NESDIS.

A - Alarm Condition:
This screen displays the conditional statement used to see if a random transmission should be sent. This statement is normally a logical expression that is true or false. For example, the expression "ana1>10.0" would equate to true if the value for analog channel 1 was greater than 10.0 and would equate to false if it was less than 10.0. Logical expressions return a value of 1.0 if true and 0.0 if false. If the conditional statement is true then a random transmission will be scheduled.

The trigger condition is actually true for any value that is greater than 0.0 and is false for any value that is 0.0 or less. This allows for standard math expressions also to be used for the trigger condition. For example, if a temperature probe was connected to analog channel 1 that read in degrees F, a math equation like "(ana1-32)*-1" could be used to trigger a transmission any time the temperature was below 32 degrees F. If the temperature was at or above freezing (32 degrees), the results of the equation would be zero or negative and would be considered false, otherwise it would be positive and true.

The conditional statement can be up to 48 characters and can be based on multiple conditions as shown in the next example: "(ana1>10.0)&(counts>0.05)." In this example the value for analog channel 1 must be greater than 10.0 **AND** the count input (normally rain fall) must be greater than 0.05.

If the conditional statement is greater than 48 characters, then just reference one of the user definable functions as the conditional statement, and enter the real conditional statement in the selected user function. See the section on "User Definable Functions" for a complete understanding on how to enter and evaluate the math and logic functions.

T - RR Transmit Options:
This screen shows the "RR Transmit Options":

```
RR Transmit Options    (Esc to Return)

Column:          | [01]        02          03          04          05
----------------|-------------------------------------------------------
S - Source:      |  None       None        None        None        None

-> - Next
<- - Previous

Enter Option >
```

S - Source:
This selects what input will be used to provide data to this column. Options include Date, Time, Batt, SDI-12 inputs, etc. If "None" is selected then that column and all subsequent columns are disabled. Date and time are normally not used for data transmission in a GOES application.

N - Next:
This advances the screen to the next column. If on the last column then this option has no effect.

P - Previous:
This reverses the screen to the previous column. This option has no effect if on the first column.

F - Force Random Transmission:
This option will force a transmission, when "T" is entered.

4.7.3 Remote Display Setup

The remote display setup options include selecting a source to be displayed such as counts or battery, and a label to describe what the source is. The following shows the "Remote Display Options" screen:

```
Remote Display          (Esc to Return)

S - Source: None
L - Label:  Label =

Enter Option >
```

S - Source:
This selects what input will be used to provide data to this option. Sources include Date, Time, Batt, SDI-12 inputs, etc. If "None" is selected then the remote display option is essentially disabled.

L - Label:
This option allow the source to be titled whatever is best suited for the source. For example, the above screen could have a source of Temp with label of Deg C.

4.7.4 Voice Modem Options

The voice modem options allow the user to select what order the data will be sent to the voice modem and if the voice modem is enabled are not. The following shows the "Voice Modem Options" screen:

```
Voice Modem             (Esc to Return)

V - Voice Modem: Off

0 - Source 0: None
1 - Source 1: None
2 - Source 2: None
3 - Source 3: None
4 - Source 4: None
5 - Source 5: None
6 - Source 6: None
7 - Source 7: None
8 - Source 8: None
9 - Source 9: None

Enter Option >
```

V- Voice Modem:
This option acts as a global enable / disable of all voice modem options.

0 - 9 Source:
This selects what input will be used to provide data to this column. Options include Date, Time, Batt, SDI-12 inputs, etc. If "None" is selected then that column and all subsequent columns are disabled. Date and time should not be used as data for the voice modem.

4.7.5 ALERT Radio Options

The following options are used to enable and define what data will be transmitted, define the alarm condition, etc. Up to five data values can be monitored and transmitted.

```
ALERT Radio Options       (Esc to Return)

A - ALERT Radio: Off
T - ALERT Radio Type: H-264

Column                |  [1]          2           3           4           5
----------------------|-------------------------------------------------------
S - Source:           |  None         None        None        None        None
I - ALERT ID:         |  0000         0000        0000        0000        0000
X - Max Range:        |  20.470       20.470      20.470      20.470      20.470
N - Min Range:        |  0.000        0.000       0.000       0.000       0.000
M - Trigger Mode:     |  Always       Always      Always      Always      Always
P - Trigger Point:    |  1.000        1.000       1.000       1.000       1.000
H - HoldOff Minutes:  |  15           15          15          15          15
O - Override:         |  2.000        2.000       2.000       2.000       2.000
R - Fixed Txd Rate:   |  24Hours      24Hours     24Hours     24Hours     24Hours
D - Txd Offset Time:  |  00:00:00     00:00:00    00:00:00    00:00:00    00:00:00

F  - Force Transmission
-> - Next
<- - Previous

Enter Option >
```

A - ALERT Radio:
This option is used to enable or disable ALERT radio operations. The default is "Off".

T - ALERT Radio Type:
The H-500XL will work with a few different ALERT radios. This option is used to select the type of radio in use.

S - Source:
This option is used to define what data will be transmitted.

I - ALERT ID:
Each sensor transmitting on an ALERT network must have a unique ID. The ID will be a number between 0000 and 8191 assigned by the ALERT network administrator.

X - Max Range:
This option is used to set the maximum input value for the selected data source. This value along with the minimum value set in the next menu are used to convert standard input values

for the data source into values compatible with the ALERT format. The ALERT data value must be a number between 0000 and 2047. This range normally does not directly correlate to the data source. For example, a 15 PSI pressure transducer will cover a range of about 35 feet of water. In this case the maximum value could be set to 35.00 and the minimum to 0.00. Now it is easy to say an ALERT data value of 0000 equals 0.00 feet of water and an ALERT value of 2047 would be 35.0 feet of water, but what about other water levels? The H-500XL™ first calculates a slope based on the max and min values as follows:

$$\frac{2047}{\text{Max - Min}} = \frac{2047}{35.0 - 0.0} = \frac{2047}{35.0} = 58.486 \text{ counts per foot of water}$$

Now the H-500XL™ will take the water level that will be between 0.0 and 35 feet and multiply it by 58.486 to get a number between 0 and 2047, and the number between 0000 and 2047 will be the value transmitted.

At the receiving station the ALERT value between 0 and 2047 can be easily converted back to feet by dividing the ALERT value by 58.486.

To see what the resolution is simply invert the calculated slope, in this example 1/58.486 is 0.017098 meaning each count of the ALERT data format is equal to 0.017098 feet of water.

The default value for the Max Range is 20.47. This value was chosen because it is a factor of 100 of 2047. To see the advantages of this lets look at using a shaft encoder that has 1 count per 0.01 foot of water. In this case each count of the ALERT data format is equal to 0.01 foot of water. This works good as long as the water level will be between 0.0 and 20.47 feet. The math is as follows:

$$\frac{2047}{20.47 - 0.0} = \frac{2047}{20.47} = 100 \text{ counts per foot.}$$

Notice this is the same as 100 counts per revolution on a shaft encoder which is one foot. Also each count will be 0.01 feet.

The default value of 20.47 works good for rain gauges also as each tip is 0.01 inch of rain.

For input values that go negative an offset will be required at the receiving site to regenerate the real data value. For example, a temperature probe that goes from -50.0 to +50.0 degrees C would be calculated much the same as before to come up with the slope.

$$\frac{2047}{50 - (-50)} = \frac{2047}{100} = 20.47 \text{ counts per degree C}$$

Now the receiving station will divide the ALERT formatted data by 20.47 to get a temperature in the range of 0 to 100. The receiving station must also use the minimum value as an offset to shift the data back to the range of -50.0 to +50.0 degrees C.

N - Min Range:
This option is used to set the minimum input value for the selected data source. See the Maximum Range Option above on how this is used by the system.

M - Trigger Mode:
The trigger mode option allows the user to decide what condition should be met before sending a transmission. The following shows the options.

> Set Pt: Greater than the set point. Transmit IF the data is greater than the Set Point. This could be used to schedule a transmission due to high water.

< Set Pt: Less than the set point. Transmit IF the data is less than the Set Point. This could be used to schedule a transmission based on the battery level starting to drop.

Delta: Transmit based on a change in data. A transmission is scheduled if the data changes more than the set point value. The change can be either an increase or a decrease. This could be used to track a changing stream or rainfall.

Always: Always transmit. No conditions have to be met, a transmission is automatically sent on each scan.

P - Trigger Point:
The "Trigger Set Point" option is used to enter the value used to compare with the actual data to see if a transmission should be sent. The last section describes the type of conditions that can be used to trigger a transmission. For example, if the user wanted to transmit based on analog 1 exceeding10.0, then the trigger mode would be set to "> Set Pt" and the trigger point would be set to 10.0. Now at each scan interval that analog 1 was greater than 10 the trigger condition would be true and a transmission would be attempted. When analog 1 dropped below 10 the transmissions would cease.

H - HoldOff Minutes:
Once a transmission has been sent it may be desirable to stop future transmissions for a period of time in order to prevent a high number of transmissions from the same sensor. The "HoldOff" variable to indicate how long this time period should last in minutes.

O - Override:
During the hold off time it still may be desirable to transmit if the data value has drastically changed. This override value is a secondary trigger level used during the hold off time.

R - Fixed Txd Rate:
In some cases the data will not change enough to cause a transmission. In this case the user may begin to wonder if the equipment is working or not. This option is used to force a transmission at some time interval from once an hour to once a day so the user can verify the equipment is working.

D - Txd Offset Time:
In an ALERT network it is not desirable to have all systems transmit at the same fixed time. This option is used to offset when a timed transmission will happen. The transmission will happen after the scan at or after the offset time, and is based on the fixed transmit rate. For example, if the scan rate is set to 15 minutes, and the transmit offset time was 00:17:00 and the fixed transmit rate was every 12 hours; then the system would transmit after the scan at 00:30:00 and 12:30:00. This would be the first scan after 00:17:00 bases on a 15 minute scan rate and a 12 hour transmit rate.

F - Force Random Transmission:
During the installation it may be desirable to force a transmission in order to test the system. Pressing the 'F' key here will cause a transmission to be sent using the ID programmed as described above and using the data based on the data source and the min and max settings as described above for the selected column.

4.7.6 E - Email Options

The H-260 is a special modem used to send email messages. When used with the H-500XL™, it will be used to send data collected by the H-500XL™ to some central site via an email message. Data can be sent based on some timed interval such as hourly or daily, or may be sent based on some alarm condition. The following options are used to set up the email options in the H-500XL™. Note that the H-260 must also be programmed before being connected to the H-500XL™. See the H-260 manual for its operation.

```
Email Options          (Esc to Return)

E - Email:             Off
R - Send Rate:         Daily
H - Include Headers:   No
S - Include Site ID:   No

A - Email Alarms:      Off
T - Trigger Source:    None
M - Trigger Mode:      Always
P - Trigger Point:     100.00

Enter Option >
```

E - Email:
This option is used to enable or disable timed email messages from being transmitted. The default setting is Off.

R - Send Rate:
This option is used to indicate how often timed email messages should be sent. This ranges from every scan to once a day. The default is daily.

H - Include Headers:
Set this option to Yes if it is desirable to send column header information with the data. If the data is to be automatically collected by some other system, then normally column headers are not used. If the data is reviewed by a person then the column headers may be helpful. The default is No.

S - Include Site ID:
Email messages may include the user entered Site ID information. If this option is set to yes then the site ID will be sent with the data. The default is No.

A - Email Alarms:
This option is used to enable or disable email alarm messages. The default setting is Off.

T - Trigger Source:
This option is used to select which system input variable will be used to evaluate if a message should be sent or not. The standard options include analog1, counts, etc.

M - Trigger Mode:
The trigger mode option allows the user to decide what condition should be met before sending an email message. The following shows the options.

> Set Pt: Greater than the set point. Send Email message IF the data is greater than the Set Point. This could be used to send a message due to high water.

< Set Pt: Less than the set point. Send a message IF the data is less than the Set Point. This could be used to send a message based on the battery level starting to drop.

Delta: Send a message based on a change in data. A message is sent IF the data changes more than the set point value. The change can be either an increase or a decrease. This could be used to track a changing stream or rainfall.

Always: Always send a message. No conditions have to be met, a message is automatically sent on each scan.

P - Trigger Point:
The "Trigger Set Point" option is used to enter the value used to compare with the actual data to see if a email message should be sent. The last section described the type of conditions that can be used to cause a email message to be sent. For example, if the user wanted to send a message based on analog 1 exceeding10, the trigger mode would be set to "> Set Pt" and

the trigger point would be set to 10.0. Now at each scan interval that analog 1 was greater than 10, the trigger condition would be true and a message would be sent. When analog 1 dropped below 10 the email messages would cease.

4.7.7 F - 4 to 20 Milliamp Options

The H-500XL™ can simulate a 4 to 20 milliamp sensor. The options here allow the user to select what input to use as the data source and to set the scaling options.

```
4 to 20 MilliAmp Output Options      (Esc to Return)

Present Milliamp Output: Not Enabled

S - Data Source:   None
H - Maximum Level: 20.000
L - Minimum Level: 4.000

Enter Option >
```

Present Milliamp Output: xxxx
This is a status screen that shows what the milliamp output should be based on the current data source and the max and min levels. This should be a value between 4.00 and 20.00.

S - Data Source:
This selects what sensor is to be simulated as a 4 to 20 milliamp sensor. For example, if a temperature sensor was connected to analog channel 1, then analog channel 1 could be the data source.

M - Maximum Level:
This is the maximum value to look for from the data source. Continuing on from the example above, if the temperature probe had a range of -50 to +50 degrees, then the max level would be set to +50, and the min level set to -50. Now a temperature of -50 would cause a milliamp output of 4.00 milliamps, and +50 degrees would produce a 20.0 milliamp output.

L - Minimum Level:
This option is used to set the minimum value to look for from the data source. See the example above under data source and maximum level.

4.8 S - Scan Options

The following shows the "Scan Option" screen. All functions of the H-500XL™ are based around the scanning process.

```
Scan Options        (Esc to Return)

Current Time:      HH:MM:SS
Next Scan:         HH:MM:SS
S - Scanning:      Off
R - Scan Rate:     HH:MM:SS
N - Next Scan At:  HH:MM:SS

Enter Option >
```

S - Scanning:
Indicates if scanning is on or off and allows the user to turn scanning on and off.

R - Scan Rate:
This shows the current scan rate and is used to change the scan rate.

N - Next Scan At:
This shows the time the next scan will take place. The user can also use this to set when the next scan should happen.

4.9 C - Configure System

```
System Setup        (Esc to Return)

T - Time:     HH:MM:SS
D - Date:     MM/DD/YY
E - Date Fmt:MM/DD/YY
I - Site ID: Site_ID
M - Sensor Mode Setup
P - Port Setup
S - Status Screens
C - Configuration Files
R - Reset Defaults
G - Sync Time Options
F - Functions Menu

Enter Option >
```

T - Time:
This option is used to set the system time, normally set to local time or to international standard time. The time format is HH:MM:SS.

D - Date:
This option is used to set the system date. The default format is MM/DD/YY but may be changed using the date format option.

E - Date Fmt:
This option is used to set the date format. The default format is MM/DD/YY but may be changed to a European format such as DD/MM/YY.

I - Site ID:
This option allows the user to enter in an eight character label that defines the site. This will also be used as the filename for the data file generated if logging is turned on.

4.9.1 M - Sensor Mode Setup

The H-500XL™ can be used as an SDI-12 sensor when used with other data loggers. SDI-12 sensors will have a unique address and will measure between 1 and 9 data values. The options under this menu allow the user to select what address the H-500XL™ will respond to and what data will be returned to the data logger.

```
Sensor Mode Setup   (Esc to Return)

A - SDI-12 Address:   0
    Measurement Time: 2
1 - Parameter 1: None
2 - Parameter 2: None
3 - Parameter 3: None
4 - Parameter 4: None
5 - Parameter 5: None
6 - Parameter 6: None
7 - Parameter 7: None
8 - Parameter 8: None
9 - Parameter 9: None

Enter Option >
```

A - SDI-12 Address:
This option sets the address the unit responds to when used as an SDI-12 sensor.

1-9 Parameter:
The options here define what values will be sent to the data logger and in what order.

NOTE: When the H-500XL™ is used as a sensor connected to another data logger using the SDI-12 interface, the aD0! command will return data values for parameters 1, 2, and 3. The aD1! command will return data values for parameters 4, 5, and 6, and the aD2! command will return data for parameters 7, 8, and 9.

4.9.2 P -Port Setup

The following options only apply to the first serial port. It may be configured to work with several types of modems or other systems.

Serial port number 2 is only used for the GOES Radio and as such will not require the user to set it up for normal operations with the GOES Radios. The last serial port is used for the ALERT Radio and for remote displays which normally operate based on fixed settings so again no user setup is required.

```
Port Setup          (Esc to Return)

B - Baud Rate: 9600
F - Flow Control: SW
C - Character Delay: 000
L - Line Feed Delay: 000
T - Terminal Emulation: VT-52

Enter Option >
```

B - Baud Rate:
This option sets the baud rate for the first serial port. The default is 9600 which will be used for nearly all applications. Other valid baud rates are 19200, 9600, 4800, 2400, 1200 and 300.

F - Flow Control:
Flow control is used to pace the data through the serial port. It is important not to send data faster than the receiving system can receive it. There are two types of flow control, software and hardware flow control.

Software flow control (SW) is also referred to as XON / XOFF. When this is enabled the receiving system will send a character (XOFF) to the H-500XL™ instructing it to stop sending data until the receiving system can catch up. At the point the receiving system is ready it will send an XON to the H-500XL™ indicating it is ready for more data. Software flow control is the default.

NOTE: If using XMODEM protocol for data file transfers, software flow control should not be used as a binary checksum value is calculated for each block of data and transferred with the data block. If the binary checksum value is the same as an XOFF command, then the system may stop the data transfer prematurely.

Hardware flow control uses two extra pins on the 9 pin connector. This is 'Request to Send' (RTS) and 'Clear to Send' (CTS). Normally a PC connected to the H-500XL™ will turn on the CTS signal when it is ready to communicate and watches the RTS signal before it sends anything to the H-500XL™. The same type of monitoring will be done by the H-500XL™, It will not send anything to the PC if CTS is not on and will turn on RTS indicating to the PC it is ready.

NOTE: Hardware flow control should only be enabled on the PC when the H-500XL™ is turned on. If hardware flow control is enabled on the PC and the H-500XL™ is off, then the PC will not be able to turn on the H-500XL™ because the PC will wait for the RTS signal to go active before sending the wake up characters, and RTS will only go active when the H-500XL™ is turned on over the serial port

C - Character Delay:
This sets a time delay between transmitted characters in milliseconds. Some modems, normally a radio modem may require this type of control in order to pass valid data through the serial port. When using a modem everything may look fine and then all at once it looks like garbage. This may be caused by an overflowing buffer in the modem and the H-500XL™ was not warned soon enough to prevent the the data from becoming junk. Try setting the character delay at 005 and then working up as needed. It may be a combination of a character delay and the line delay to provide the best system operation. The default is 0.

L - Line Feed Delay:
This is a delay used at the end of each line of data sent out the serial port. This is in milliseconds. This is used in connection with the character delay. The default is 0, no delay.

T - Terminal Emulation:
Terminal emulation is used to control computer screen operations like clearing the screen or moving the curser around to update different portions of the screen without having to redraw the complete screen. If the information on the screen appears to be from the H-500XL™ but is displayed in abnormal places or intermixed with abnormal characters, then emulation is the most probable cause of the problem. The emulation modes supported are VT-52 and VT-100.

4.9.3 Status Screens:

There are five user definable status screens. The following screen shows the menu for changing these options based on user needs. These options not only affect how the built in display and keypad work but also how the remote menu 'View Status' screen is displayed. The five values displayed in the upper left corner of the 'View Status' menu discussed earlier in this chapter are based on 'Status Screens' settings.

```
Status Screens       (Esc to Return)

1 - Label 1: Rain  =     A - Source 1: Counts
2 - Label 2: Value =     B - Source 2: None
3 - Label 3: Value =     C - Source 3: None
4 - Label 4: Value =     D - Source 4: None
5 - Label 5: Value =     E - Source 5: None

Enter Option >
```

1 to 5 Label:
The first five screens on the built in display can be defined by the user. The label option is used to identify the displayed data. All of the status screens are initially disabled. If one or more of the screens are enabled and when using the built-in display and keypad, the first screen displayed after turning on could look as follows:

```
Rain  =  2.55
```

1 to 5 Source:
The source option is used to define what data is to be displayed.

4.9.4 C - Configuration Files Menu

These options are used to save and retrieve setup information. Once a system is configured it is best to save the setup information so that it may be retrieved later if the system is replaced or duplicated.

```
Configuration Files Menu      (Esc to Return)

C - Create CFG File
S - Setup From CFG File

Enter Option >
```

C - Create CFG File:
This option is used to create a configuration file to the internal data memory or to the external data card. The configuration file is an ASCII file that may be viewed or printed for a hard copy listing of the options for the site. Several configuration files can be stored on a single card.

S - Setup From CFG File:
Use this option to update the system options from a configuration file either from the internal data memory or from the external data card.

R - Reset Defaults:
This option will reset all H-500XL™ user definable options back to the factory default value. Keep in mind this will not reset the H-355 bubbler options back to its default values.

4.9.5 G - Time Sync Options

The new high data rate GOES Radio operations require very accurate time clocks. In most cases on board timers are unable to maintain the needed accuracies. In this case the H-500XL™ and the GOES Radio can be synchronized via a GPS system.

```
Time Sync Options   (Esc to Return)

Last Sync On: 00/00
T - Time:     16:23:35
D - Date:     11/04/02
S - Sync:     Sync Disabled
N - Sync Time Now

Enter Option >
```

T - Time:
This option shows the current time and is used to update the time if it needs adjustments. The screen will be updated each second to allow easy viewing of the current time.

D - Date:
This line of the screen shows the current date and is used to update the date if needed.

S - Sync:
This option is used to sync the GOES radio and / or the H-500XL™ to a GPS receiver. This provides very accurate timing for the system. If the H-500XL™ is synced to the GPS clock, then it must be set to international standard time.

N - Sync Time Now:
This option is used to force the system to sync the time immediately. This is normally used during an installation of a new site or on a site visit to see if the system is working properly.

Last Synced On:
This is a status screen that indicates when the time clock was last updated. When visiting a site this should be the current day if sync is enabled. If it is a few days old or more then there may be a problem with the equipment used to sync the clocks. Keep in mind when using a Signal Engineering model SE100 or SE300 radio, the system will not stop transmitting based on no time sync, yet on a model SE1200 radio it must sync at least once every 7 days or transmissions will be stopped regardless of what baud rate is used.

4.9.6 F - Functions Menus

Introduction:
There are 40 general purpose user definable functions, and three specific purpose functions. Since all 40 functions cannot be displayed easily on a single screen they will be displayed on four screens with 10 functions each. The function menus provide an easy way to enter, edit and test functions. The functions are normally used for non linear sensor configurations, but may be used for other advanced operations as described later. The functions use all the standard math operators and logic operations for decision making types of applications. The general purpose functions are called Fnt01 to Fnt40. The default expression for the functions is the text '0'. A function screen showing the first two functions changed by the user and the others set to the default settings could look like the following:

```
Functions Menu  01 to 10       (Esc to Return)

1 - Fnt01 = ana1*72.0
2 - Fnt02 = 9/5*ana2+32
3 - Fnt03 = 0
4 - Fnt04 = 0
5 - Fnt05 = 0
6 - Fnt06 = 0
7 - Fnt07 = 0
8 - Fnt08 = 0
9 - Fnt09 = 0
0 - Fnt10 = 0

N - Next
V - View Values


Enter Option >
```

In this case, fnt01 = ana1 * 72 is the conversion from volts to degrees for a wind vane that outputs 0 to 5 volts. Multiplying the analog voltage (0 to 5 volts) by 72 results in a value between 0 and 360. The second function is the conversion from temperature in degrees C to degrees F where ana2 is connected to a temperature probe measuring the temperature in degrees C. The rest of the function expressions are set to the default of '0'.

There are two sections to a function; first is the function expression and the second is the function value. The expression is a user entered string of text of some mathematical equation. An example of the expression is "9/5*ana2+32". The value of a function is normally the mathematical results of the expression. In the example above, if analog channel 2 read 23.5, the value for the function would be 74.3. The default expression is '0' as a text character, and the default value for the function is 0.00.

To change a function expression, press a key 0 to 9 for the desired function. The unit will respond with the text "E - Edit T - Test Function". Pressing the 'E' key allows the user to edit the function, and pressing the 'T' key will test the current function, returning its value. If the function was entered wrong, then the system will try to indicate what was wrong and where the error was located in the expression. When editing a function use the left and right arrow keys to move back and forth through the function and the delete key to remove unwanted characters. From the main function menu, press the 'N' key to go to the next set of 10 functions. Press the 'V' key to view the equated value for the function expressions.

There are a few conditions when the value does not equal the evaluated expression. One example is if a divide by zero occurs in the expression, the function value will be -99.99. In most cases a user is not at the site testing each results to see if it was valid or not, so the system must return some value to be logged or used later for some other reason. In these cases a -99.99 should be easy to spot in a data file.

Math Evaluator Operations:
Before discussing the user interface for entering and testing functions any further at this point, lets look at the operations available, their priority and how the math section is tied to the hardware. The following lists include all the functions, operators, variables, and constants used by the math evaluator. Notice that all the functions and variables are in lower case. They may be entered in either upper or lower case but the system will convert them to lower case before storing them in memory, and will display them afterwards in lower case.

Highest Level Of Priority:

Trigonometry Functions:

sin(x) Sine of x based on degrees, SIN(30) = 0.5.
cos(x) Cosine x based on degrees, COS(30) = 0.866025.
tan(x) Tangent x based on degrees, TAN(30) = 0.57735.

asin(x) Arc sine x based on degrees, ASIN(0.5) = 30.0.
acos(x) Arc cosine x based on degrees, ACOS(0.5) = 60.0.
atan(x) Arc tangent x based on degrees, ATAN(0.5) = 26.565051.

sinr(x) Sine of x based on radians, SINR(1) = 0.841471.
cosr(x) Cosine x based on radians, COSR(1) = 0.540302.
tanr(x) Tangent x based on radians, TANR(1) = 1.557408.

asinr(x) Arc sine x based on radians, ASINR(0.5) = 0.523599.
acosr(x) Arc cosine x based on radians, ACOSR(0.5) = 1.047198.
atanr(x) Arc tangent x based on radians, ATANR(0.5) = 0.46348.

Logarithmic Functions:

log(x) Log base 10 of x, LOG(1000) = 3.0.
ln(x) Natural log of x, LN(1000) = 6.90775.
exp(x) Natural log base of 2.718282 raised to the power of x, EXP(3) = 20.08554.

Basic Math Functions:

abs(x) Absolute value of x, ABS(-55.67) = 55.67.
sqrt(x) Square root of x, SQRT(100) = 10.0.

Logical functions:

if(x,y,z) If condition x is true **then** return y **else** return z.
IF(2.5 > ana1,10,-10) = 10.0 **if** 2.5 is greater than analog channel 1.
= -10.0 **if** 2.5 is less than analog channel 1.

Built In Specific Sensor Functions:
When a sensor is used in several applications it may be easier to build an equation into the operating system for that sensor rather than to have all customers enter the equation every time the sensor is used. The following temperature equations are based on a

thermistor in series with a precision fixed resistor. The fixed resistor is normally a 20K ohm 0.1% low temperature coefficient resistor. When using one of these temperature probes see its app note for its full details.

TP20T(ANAx) Convert the voltage on analog channel x to a temperature based on the built in voltage to temperature equation TP20T. The following is the actual equation:

```
a = log(20000.0*(5.0/a[0]-1.0))
temp = (10000/(10.29164 + 2.39125*a + 0.00157*a^3))-273.15
```

TP20B(ANAx) Convert the voltage on analog channel x to a temperature based on the built in voltage to temperature equation TP20B. The following is the actual equation:

```
a = log(20000.0/(5.0/a[0]-1.0))
temp = (10000/(10.29164 + 2.39125*a +0.00157*a^3))-273.15
```

TP20M(ANAx) Convert the voltage on analog channel x to a temperature based on the built in voltage to temperature equation TP20M. This is a temperature probe used by the Maine district of the United States Geological Survey. The following is the actual equation:

```
a = log(20000.0/(5.0/a[0]-1.0))
temp = (10000/(9.69446 + 2.32945*a + 0.00080*a^3))-273.15
```

Next Level Of Priority:

Powers:

x^y: x raised to the power of y, 3^5 = 243.

Next Level Of Priority:

Multiplication / Division:

x * y: x multiplied by y, 20 * 30 = 600.

x / y: x divided by y, 20 / 30 = 0.666667.

Next Level Of Priority:

Addition / Subtraction:

x + y: x added to y, 20 + 30 = 50.

x - y: x subtract y, 20 - 30 = -10.

Next Level Of Priority:

Low Level Logic:

x == y: Is x equal to y? (Notice double equal signs) 1 if true 0 if false.

x!=y: x does not equal y? 1 if true 0 if false.

x > y:	Is x greater than y?	1 if true 0 if false.
x >= y:	Is x greater than or equal to y?	1 if true 0 if false.
x < y:	Is x less than y?	1 if true 0 if false.
x <= y:	Is x less than or equal to y?	1 if true 0 if false.

x & y: AND operation, **If** x does not equal 0.0 **AND** y does not equal 0.0 **then** return 1.0 **else** return 0.0. For example, (ana1>2.5)&(ana2>3.5) returns 1.0 **if** analog channel 1 is greater than 2.5 **AND** analog channel 2 is greater than 3.5; **else** return 0.0

x | y: OR operation, **If** x does not equal 0.0 **OR** y does not equal 0.0 return 1.0 else return 0.0. For example, (ana1>2.5)|(ana2>3.5) returns 1.0 **if** analog channel 1 is greater than 2.5 **OR** analog channel 2 is greater than 3.5; **else** return 0.0

Lowest Level Of Priority:

Assignments:

Fnt01 = 12.34 Assign the value of 12.34 to function 01.

System Variables:

All system source variables can be used with the math functions. For example an analog input channel can be used such as Fnt01=10*ana1+32. The following is a complete list of all the system source variables.

date This is the current date in a YYMMDD format

time This is the current time in a HHMMSS format.

seconds This is the current seconds, 0 to 59.

minutes This is the current minutes, 0 to 59.

hours This is the current hours, 0 to 23.

day This is the current day, 1 to 31.

month This is the current month, 1 to 12.

year This is the current year, 00 to 99, 2000 to 2099.

batt This will cause the system to take a new battery measurement and convert it to volts and return the results.

counts This will cause the system to read the latest summation count value and return the results. The results are adjusted for the count slope coefficient.

totcnt This will cause the system to read the last total count value and return the results. The results are adjusted for the count slope coefficient.

digioX This will cause the system to read digital I/O X and return a 1.0 if it is high and a 0.0 if it is low. X is a 1 or a 2 based on digital I/O 1 or 2.

anaX This will cause the system to read analog channel X, apply the slope and offset for analog channel X and return the results. X is in the range of 1 to 4.

freq The system will read the frequency input, apply the slope and offset for the frequency input and return the results.

encodr The unit can use the two digital inputs to read the older style quadrature shaft encoders. If the system is configured for this type of encoder then this would cause the encoder to be read and the results returned.

tscans This is the total number of scans since logging started. This can be used as a counter or to initialize some variables at the start of scanning.

sdiAP This will cause the system to scan the sensor at SDI-12 address A and return parameter P as the results. The address is in the range of 0 to 9 and the parameter is in the range of 1 to 9.

fntXX Functions may be called from other functions or used as variables for other functions. The value of the referenced function is returned but the referenced function is not reevaluated. See the section on advanced operations. The value of XX is 01 to 40 for fnt01 to fnt40.

System Constants:
There are a few constants the system recognizes so the user does not have to type them in directly. They are all implemented to the highest precision possible.

pi The value for **pi** 3.14159265359.

e The value for ***e*** 2.71828182846.

Entering Functions:
The main functions can only be entered or edited using the menu or command interface over the serial port, not from the built in display / keypad. As stated above, to change a function press a key 0 to 9 for the desired function. The unit will respond with the text "E - Edit T -

Test Function". Pressing the 'E' key allows the user to edit the function expression. Once the function is entered press the ENTER key and the function expression will be evaluated and any errors in the function will be displayed. Use the left and right arrow keys to move back and forth through the function, and the delete key to remove unwanted characters. Also no spaces can be used when entering a function.

There are 31 bytes of memory reserved for each function. If a function expression is more than 31 bytes then space from the next function will be used. A single function can be up to 124 characters long, but remember this would use the space from three additional functions. If a function is greater than the 31 bytes, then the display will not list the next function as a usable function. Notice how function 04 on the following screen is not listed because function 03 has more the 31 characters in its expression.

```
Functions Menu  01 to 10       (Esc to Return)

1 - Fnt01 = ana1*72.0
2 - Fnt02 = 9/5*ana2+32
3 - Fnt03 = 23.5*ana1^3+45.32*ana1^2-87.4*ana1+76.32

5 - Fnt05 = 0
6 - Fnt06 = 0
7 - Fnt07 = 0
8 - Fnt08 = 0
9 - Fnt09 = 0
0 - Fnt10 = 0

N - Next
V - View Values


Enter Option >
```

User Defined Constants:
A function may also be used as a user defined constant. For example, lets say a constant of 23.76258 is used repeatedly. Then enter for fnt01, "fnt01 = 23.76258", now use fnt01 in other functions, "fnt02 = fnt01* ana1 + fnt01 * ana2". This would be the same as "fnt02 = 23.76258 * ana1 + 23.76258 * ana2". The more the constant is used the more useful this becomes.

Specific Purpose Functions:
There are three special purpose functions, one to define when a GOES random transmission should be sent, and one for each of the two digital I/O outputs. The function for the GOES random transmission is entered and tested under the GOES option menus, and the digital I/O conditional output functions are entered and tested under the digital I/O setup menus.

Complex Functions:
functions can have more than one expression section. A standard function has the following form.

fntxx=expression

A complex expression will have the following form.

fntxx=expression1;expression2;expression_x

The function being edited will take on the results of the first expression automatically. Normally the second expression is an assignment type of expression, assigning a value to another function or variable, for example, fnt01=10*ana1;fnt02=fnt01/5.

@ Functions:
Functions that start with the '@' character will be evaluated automatically at the beginning of each scan, and will not be evaluated again if used as a log column source or GOES column source, etc. Normally to evaluate a function, it must be used as the data source for a log or GOES column, but not so with an @ function. @ functions are used for counters or a running average type of function where if it was evaluated more than once a scan it could create errors in the returned value. The following example will count up on each scan and reset to 0 every day.

Fnt01 = 0
Fnt02 = @if(fnt01==day, fnt02+1,0);fnt01=day

When scanning is started function 1 is set to 0, function 2 is set to 0 then function 1 is set to the current day. On each scan function 2 is incremented if the same day, else reset to 0.0, and then function 1 is set the to current day again.

Math Function Example 1 (Temperature Conversion):
An SDI-12 temperature probe reports temperature only in degrees F, yet the desired units is in degrees C. The temperature probe is setup on address 5 with only one value returned for temperature. Enter an equation that will convert the temperature in degrees F to degrees C.

Fnt01 = (sdi51 - 32) / 9 * 5

Now fnt01 can be used as a data source in the log report and the reported value will be temperature in degrees C.

Math Function Example 2 (Rating Curve):
Most rating curves are developed by taking several discharge measurements versus stage for a variety of stage readings. A typical rating curve will take on the form as follows:

$Q = p(h-e)^b$

Where Q = discharge
h = gage height
e = gage height of zero flow.
p = constant which is numerically equal to the discharge when h-e = 1.
(This is 1 foot of gage height over the zero flow point)
b = slope of the rating curve.

After several discharge measurements p is calculated to be 45.24 and b is calculated to be 0.6667 or 2/3. The zero flow point is the gage level at zero flow, and for this example could be 3.75. With this information we can enter the function into the system.

Fnt02 = 45.24 * (stage - 3.75)^(2/3)

Now as the stage value varies up and down so will the calculated discharge value.

Math Function Example 3 (GOES Random Transmission Function):
A GOES random transmission is desired if the stage level is greater than 20.5 feet and the rain is greater than or equal to 0.10 inches.

Alarm Condition = (Stage > 20.5) & (Counts >= 0.10)

Now if the stage level is higher than 20.5 (true) and the rain is 0.10 or higher (true), then a random transmission will be sent.

Also notice this function is entered under the GOES random menu, not in the general purpose functions menu as this function has a very specific purpose.

4.10 Accessory Setup Options

```
Accessory Setup        (Esc to Return)

P - Gas Purge Setup

Enter Option >
```

Accessory products that are not a direct input or output will have a sub-menu structure here providing the needed configuration options.

4.10.1 P - Gas Purge Setup

This screen shows the "Gas Purge System Setup":

```
Gas Purge Setup        (Esc to Return)

Last Purge At:         MM/YY HH:MM
Tank Pressure:         X.XX PSI
Line Pressure:         X.XX PSI
B - Bubble Rate:       60
P - Purge Pressure:    40
D - Purge Duration:    50 sec
S - Timed Purge:       0 days
A - Auto Purge:        Off
T - Purge Threshold:   20
M - Manual Purge

N - Number of Purges: 000
U - Update All Values

Enter Option >
```

B - Bubble Rate:
This option sets the bubble rate on the H-355. Valid ranges are 30 to 120 bubbles per minute using a standard 1/8 ID orifice line.

P - Purge Pressure:
This option set the purge pressure in units of PSI. When the H-355 purges it sequences through a series of operations. First it isolates the sensor from the pressure line to protect the sensor from the high purge pressure. Then the compressor turns on and builds the pressure up to the level indicated by this option, "Purge Pressure". When the pressure is at the desired level another valve opens applying the full tank pressure to the orifice line without any restrictions. The line is now being purged. The purge will continue for several seconds based on the value in the "Purge Duration" option. After the purge the purge valve is turned off and the line pressure is again applied to the sensor. The compressor may turn on again if needed to maintain the desired bubble rate.

D - Purge Duration:
This option determines the amount of time of the purge.

S - Timed Purge:
This option allows the H-355 to programmed on timed interval. For example, if it was set for 10 days, the H-355 would purge every tenth day at 12:00:00 noon, just following the measurement.

A - Automatic Purge:
This option must be turned to "ON" if the Timed Purge and Purge Threshold is desired.

T - Purge Threshold:
If the orifice line pressure reaches the purge threshold, the H-500XL™ will initiate a purge.

M - Manual Purge:
Selecting this option will cause a purge to happen now.

N - Number of Purges:
This is mainly a status screen showing how many times the system has purged the orifice line. Pressing the N key will reset this to 0.

U - Update All Values:
The values on this screen are not updated automatically due to the time it takes to read the values from the bubbler system. In order to update the values the 'U' key must be pressed. This will take a couple of seconds.

Chapter 5
Operation with the GOES Radio

5.1 Introduction

The H-500XL™ has special functions for operation with the *WATER*LOG® model H-222** GOES Radio. This radio may be the original radio from Telonics (part number H-222) or the newer units from Signal Engineering (Part Number H-222SE) offering 100, 300 or 1200 baud operation. Although all attempts have been made to make the interface the same for all radios, there are still a few differences. Those differences will be explained under each section as needed.

The H-500XL™ is used to program the GOES Radio setup options and to send data to the Radio for transmission. The communication link between the H-500XL™ and the GOES Radio is through the RS-232 Com Port 2. The GOES Radio is capable of sending data at regular timed intervals called the Self-Timed mode, and at random intervals called the Random mode. Both types of transmissions can be in operation at the same time. The H-500XL™ will check if data is to be sent to the GOES Radio data buffer after each scanned measurement. The GOES Radio will transmit any data available in its buffer at its normal interval in the Self-Timed mode.

Note: There are several options in the GOES Radio setup, some of these options are stored in the Radio memory, and some in the H-500XL™ memory. The options stored in the H-500XL™ are protected from power failures, but those stored in the radio are not. To protect the options stored in the radio, make sure power connections are secure and heavy gauge wire is used.

5.2 Configuring the GOES Radio

The following sections describe the submenus used for configuring the GOES radio. Each of the option screens can be changed using the standard editing methods of the H-500XL™. The GOES radio must be connected to the RS-232 Com Port 2. If the radio is not connected to the right port, an error message will be displayed.

Several of the options below are assigned by NOAA / NESDIS, (United States Department of Commerce, National Oceanic and Atmospheric Administration, National Environmental Satellite Data and Information Services). Other options are user dependant. This chapter assumes the user has a basic understanding of the GOES system. It is the responsibility of the user to apply for and receive approval from NOAA for operating on the GOES system.

Once the radio is enabled and scanning is turned on, several of the GOES options cannot be edited. The message "`Turn Scanning and GOES Off First`" will be displayed indicating that scanning must be turned off and the Radio must be turned off before the change can be made. If some of the options are changed without disabling the radio first, those changes may not be acknowledged by the radio. Be sure to turn of the radio before changing the GOES Radio configuration!

The following is the complete menu structure for the GOES options.

- GOES Options ->
  - Radio Type[SE-100]
  - GOES Mode: [Off]
  - GOES Time [HH:MM:SS]
  - GOES Adrs [12345678]
  - GOES Preamble[Short]
  - Self Timed Options->
    - ST Channel [000]
    - ST Rate [HH:MM:SS]
    - ST Offset [HH:MM:SS]
    - ST Baud Rate [100]
    - ST Window [1 Min]
    - ST Data Fmt [SHEF]
    - Data Order [SCAN]
    - Data First [Newest]
    - Send SHEF Codes[No]
    - Append Bat Valu[No]
    - Scans / Xmit [32]
    - ST Data Opts ->
      - Source 1 [None]->
      - SHEF Code 1 [ ] ->
      - Skip Rate 1 [01] ->
      - Format 1[XX.XX]->
    - ST Buffer Cnt = XXXX
    - Transmit ST Data?
  - Random Options->
    - RR Channel [000]
    - RR Rate [HH:MM:SS]
    - RR Baud Rate [100]
    - Tx Fnt[0]
    - RR Data Opts ->
      - Source 1 [None]
      - :
      - Source 5 [None]
    - RR Buffer Cnt = XXXX
    - Transmit RR Data?

5.3 GOES Radio Type

This option is used to select the type of radio that will be used. The radio type will mainly affect the baud rate options. More data can be sent in the same amount of time using a faster baud rate.

GOES Options ->	Radio Type[SE-100]

SE-100: This is a 100 baud radio from Signal Engineering. This is the default option.

SE-300: This is a 100/300 baud radio from Signal Engineering. This is the most common radio. This radio may also be equipped with an SDI-12 based GPS receiver.

SE1200: This is a 100/300/1200 baud radio from Signal Engineering. This radio has an integrated GPS receiver for time keeping.

Telonics: This is the older 100 baud radio from Telonics. This radio is no longer available for purchase, but several still exist in the field.

5.4 Select GOES Mode

This option is used to set the mode of operation for the GOES Radio. The radio will not allow the mode to be set if the other options are not set properly. If the Self-Timed settings are such that the time required to send the data is greater than the defined transmit window, an error message will be displayed. The options are as follows:

GOES Options ->	GOES Mode: [Off]

Off: The radio is disabled and changes to the radio options may be made in this mode.

Timed: The radio is set for Self-Timed transmissions only. No changes should be made to the radio options in this mode.

Random: The radio is set for Random transmissions. No changes should be made to the radio options in this mode.

Both: Both Self-Timed and Random transmissions are enabled. No changes should be made to the radio options in this mode.

5.5 GOES Time

This screen allows the user to set or check the time clock in the GOES Radio. This is a different clock than the one in the H-500XL™. This clock must be set to universal standard time, while the time clock in the H-500XL™ may be set to the local time.

GOES Options ->	GOES Time [HH:MM:SS]

NOTE: When using the H-222SE 1200 baud radio, the clock in the radio is set using a built in GPS system. The user can look at the time but cannot change it. On the H-222SE 1200 baud radio, if the clock is not incrementing every second as expected, the radio has not acquired time from the GPS system. The H-222SE 1200 baud radio will not transmit if the time has not been acquired initially or if it has been more than 7 days since the last GPS time sync. This radio will try to acquire time once every day, and at power up.

When using the H-222SE 100 or the H-222SE 300, the system may include a GPS time keeping option. In this case the GOES time can still be set by the user.

The Telonics radio will not allow its clock to be set when the radio is enabled. Therefore the GPS options are invalid in this case.

5.6 Data Collection Platform Address

This is the address of the Data Collection Platform. This address is assigned by NOAA and is automatically transmitted with the data to the GOES satellite.

GOES Options ->	GOES Adrs [12345678]

5.7 Select GOES Preamble

The preamble is a carrier signal sent to the satellite prepended to the transmitted data. This amount of time is added to the total transmission time.

GOES Options ->	GOES Preamble[Short]

Short: The short preamble is 0.98 seconds. This is the default option and the one that is normally used.

Long: The long preamble is 7.3 seconds. This option is not used very often.

5.8 Self-Timed Options

This is the main screen that allows access to the setup options for the Self-Timed transmissions. Several of these screens use the abbreviation ST to indicate one of the Self-Timed options.

GOES Options ->	Self Timed Options->	ST Channel [000]	
		ST Rate [HH:MM:SS]	
		ST Offset [HH:MM:SS]	
		ST Baud Rate [100]	
		ST Window [1 Min]	
		ST Data Fmt [SHEF]	
		Data Order [SCAN]	
		Data First [Newest]	
		Send SHEF Codes [No]	
		Append Bat Valu [No]	
		Scans / Xmit [32]	
		ST Data Opts ->	Source 1 [None]->
			SHEF Code 1 [ ] ->
			Skip Rate 1 [01] ->
			Format 1[XX.XX]->
		ST Buffer Cnt = XXXX	
		Transmit ST Data?	

ST Channel [000]:
This option allows the user to enter the Self-Timed transmission channel number. The range is 001 to 199 and represents a specific frequency for communicating with the satellite. The channel number will be assigned by NOAA.

ST Rate [HH:MM:SS]:
This option allows the user to set the rate at which data will be transmitted over the Self-Timed channel. This rate is normally on an hourly interval, for example 04:00:00 (every four hours). This setting along and the setting for the "ST Offset" determine the true time that data will be transmitted. See the next section for an example. This option also indirectly determines how much data will be sent on each transmission. Use 00:00:00 for a 24 hour transmit rate. This transmission rate will be assigned by NOAA.

ST Offset [HH:MM:SS]:
This option is used to set the transmission time relative to midnight. This setting and the setting for the "ST Rate" determine the start of the transmit window. As an example, assume the offset time is set to 00:30:00 and the transmission rate is set to 04:00:00. With this information, the H-500XL™ can calculate the start time of each transmission window for a single day. This would be at 00:30:00, 04:30:00, 08:30:00, 12:30:00, 16:30:00, and 20:30:00. As the H-500XL™ automatically scans and logs data, it also checks to see if the GOES Radio is enabled, and if data should be sent to the radio for transmission. The actual transmission time is determined by the window size and the amount of data being transmitted. The H-500XL™ uses the window size and the amount of data being transmitted to calculate an offset time in order to center the transmission in the middle of the window. This centering process is done automatically, and the user should not add any time to the offset option in an attempt to center the data. The offset time will be assigned by NOAA.

Note: When setting up a system to transmit GOES data it is **not** necessary to calculate the next transmission time and enter that into the offset. This could cause the Radio to never send data. A good rule of thumb is that the offset must be less than the transmission rate.

Note: When the Telonics radio is used, data is sent to the radio on every scan. The ST buffer byte count will normally show the number of bytes ready for transmission at all times except during the time just after a transmission and before the next scan at which time it will report zero bytes.

When using one of the Signal Engineering radios, data is loaded into the radio only on the scan just before the transmission. In this case the ST buffer Byte count value will normally show a value of 0 except between the time of the scan just before the transmission and the transmission itself.

ST Baud Rate [100]:
This option is used to set the baud rate for the Self-Timed transmissions. This may be different than the Random transmission baud rate. This option is dependent on the radio type and will be 100, 300 or 1200 baud. This will also be assigned by NOAA.

ST Window [1 Min]:
NOAA will assign a window length indicating how much time is allowed to transmit data. The default is a 1 minute window. The options range from a 1 minute to a 5 second window. The transmission will automatically be centered in the selected window.

ST Data Fmt [SHEF]:
Self-Timed transmissions can be either a SHEF (ASCII) or a binary format. The SHEF format uses plain ASCII text and are easily readable, but they take longer to transmit. On the other hand, binary data is transmitted quicker, but the file will need to be decoded before it can be read. If more data is required, then a binary format may have to be used. Refer to the GOES Data Format section for more details on the SHEF format and the GOES binary format. This option should not changed while scanning and GOES are enabled.

SHEF: Send data in a readable ASCII format. 15.26 means just that, 15.26.

BINARY: Send data using a three character coded sequence for each value. 15.26 would be represented as @Wv. See the GOES Pseudo-Binary Look Up Table later in this chapter for instructions on decoding these values. Binary data will be preceded with the characters "BST" for binary scan ordered data transmissions or with "BCT" for binary channel ordered data transmissions.

Data Order [Scan]:
This option defines if data will be sent based on each line representing a single scan or each line representing a single channel.

Scan: Each line of data represents one scan and one value from each defined input.

HG TA VB 18.34 22.78 12.45 18.76 22.45 12.44 18.97 22.15 12.45 19.43 22.02 12.45	SHEF headers are turned on. Stage, Temp, and Battery values in each line. Each line is a different scan at some defined time interval.

Channel: Each line represents all the data from a single sensor.

HG 18.34 18.76 18.97 19.43 TA 22.78 22.45 22.15 22.02 VB 12.45 12.44 12.45 12.45	Each line has data from a single sensor. Each value in the line is scanned at a different time based on scan rate.

Data First [Newest]:
This option defines if the newest or oldest data should be sent first, (ascending or descending data order). Some decodes programs only accept the data in one format and not the other.

Newest: The most recent scan will be the first data point that is transmitted by the radio and also the first data point received by the decoder.

Oldest: The first scan of the ST Rate interval will be the first data point transmitted by the radio and also the first data point received by the decoder. The last point transmitted will be the most recent scan. This is the opposite of 'Newest.'

Send SHEF Codes [No]:
The system uses this option to see if SHEF codes are to be included in the data transmission. The SHEF code is a two character code that represents the data. For example the standard SHEF code for the stage is HG for height of the gauge and TA for temperature ambient. The SHEF codes may be useful in decoding and although SHEF codes can be defined and transmitted, no attempt was made to hold exactly to the SHEF code format.

SHEF (Standard Hydrometeorological Exchange Format) is a documented set of rules for coding data in a form for both visual and computer recognition. It is designed specifically for real-time use and not designed for historical or archival data transfer. All the critical elements for identification of data are covered: station identifiers, parameter descriptors, time encoding conventions, unit and scale conventions, and comment fields are all part of the code.

The true SHEF implementation does not lend itself well to GOES transmissions, but using portions of it can be helpful.

Append Bat Valu [No]:
This option allows one battery reading to be appended to the data being transmitted. Normal applications transmit 15 minute data yet battery values are not required that often. Fifteen minute battery readings also take up transmit time that could be used for other data. Selecting 'Yes' to this option allows the user to still get a battery value for each transmission, while shortening the transmit time or allowing other data to be transmitted instead.

Scans / Xmit [32]:
This option allows the user to select how many lines of data will be sent with each Self-Timed transmission. This allows redundant data to be sent with each transmission. This option is interactive with the ST Rate option, the Logging Interval option, and the ST Skip Rate option. This option defaults to 32 which will cause the H-500XL™ to send 16 lines of new data and 16 lines of redundant data for each transmission based on a 4-hour transmission rate, a logging rate of 15 minutes, and a ST skip rate of 1. Sending redundant data is a common practice with the GOES system that allows the data to be transmitted more than once, protecting against lost transmissions. The following table shows some common setup options and how the different options interrelate.

ST Rate	Scan Rate	Scans / ST Rate	ST Skip Rate	Scans / Tx	New Lines of Data	Redundant Lines of Data
04:00:00	00:15:00	16	1	16	16	0
04:00:00	00:15:00	16	1	32	16	16
04:00:00	00:01:00	240	15	16	16	0
04:00:00	00:01:00	240	15	32	16	16

Notice that with a one minute scan rate there are 240 scans in the 4-hour transmission period. However the skip rate is set to 15 so 240 divided by 15 = 16 meaning there will be 16 new scans sent to the GOES Radio in the 4-hour transmission window.

ST Data Options ->:
The submenus under this option allow the user to select the data that is to be sent to the radio and in which order. SHEF codes are also defined here along with skip rates for each data value. Defining the options here is like defining columns in a spreadsheet. ST value #1 will

be the first data point sent to the GOES Radio, ST value #2 the next and so on. Options include Date, Time, PSI, Stage, Battery Voltage, or any of the SDI-12 parameters.

ST Data Opts ->	Source 1 [None]->	Source 2 [None]->	...	Source 20 [None]->
	SHEF Code 1 [ ] ->	SHEF Code 2 [ ] ->	....	SHEF Code 20 [ ] ->
	Skip Rate 1 [01] ->	Skip Rate 2 [01] ->	...	Skip Rate 20 [01] ->
	Format 1[XX.XX]->	Format 2[XX.XX]->	...	Format 3[XX.XX]->

Source 1 [None]->:
The source option is used to indicate what data value should be transmitted and in what order. Moving up and down allows the user to select one of the following valid data sources.

None: The column is turned off, **and all of the following columns are ignored.**
Date: Place the date in the column (normally the date is not sent as GOES data).
Time: Place time in the column, (Normally the time is not sent as GOES data).
Counts: Place the summation count value in the column.
TotCnt: Place the total count value in the column.
AnaX: Place the analog channel X (1 - 4) reading in the column.
DigIOX: Evaluate digital I/O X (1 or 2) and place a 0 or 1 in the column.
Freq: Place the converted frequency reading in the column.
Encodr: Place the quadrature encoder count value in the column.
Batt: Place the battery reading in the column.
TScans: Place the total number of scans in the column.
SDIAP: Place the selected SDI-12 reading in the column (address A parameter P).
FntXX: Place the results (value) of the general purpose function XX in the column.

Note: The SDI-12 entries go from address 0 to 9 and then A to L and the parameter is always 1 to 9. The entry SDI 62 would indicate the sensor at address 6 and use the 2nd parameter.

SHEF Code 1 [ ]->:
The SHEF code for each data value may be defined by the user. This is normally a two character entry that represents the data value. For example "HG" stands for the Height of the Gage, and "TA" stands for the Temperature of the Ambient.

Skip Rate 1 [01]->:
The H500XL™ may be updating other devices (i.e. the FLASH card, or the remote display) along with the GOES Radio. The other devices may need to be updated more often than the GOES Radio. This option is used to set a skip factor indicating to the H-500XL™ to use only every Nth measurement for GOES data, where N is the skip rate. The valid range is 01 to 99. For example, assume a remote display needs to be updated every minute and GOES data is desired only every 15 minutes. The scan rate would be set to 1 minute in order to update the display every minute, and the ST skip rate would be set to 15 so that every 15th measurement would be used for GOES data.

Format 1 [XX.XX]:
The user can choose a data display format for each GOES data value transmitted. This option is only valid for the SHEF data and not for binary data. The format indicates how many digits will be displayed on each side of the decimal point. The default is XX.XX which is 2 digits on each side of the decimal point. This gives a range of -9.99 to 99.99. If the value is outside the range, the most significant digits are displayed and the decimal point is shifted as needed. For example a value of 123.45 would be displayed as 123.4 if the XX.XX format was used. Some GOES decoding programs must have data in a fixed format so it is important to choose a format that fits the range of data expected for that column. Also choosing a format that displays several digits such as XXXX.XX will waste space and transmission time if the data for the column never uses that many characters.

ST Buffer Cnt = XXX:
This is a status screen that shows how many bytes are in the Self-Timed buffer of the Radio ready to be transmitted.

Note: When the Telonics radio is used, data is sent to the radio on every scan. The ST buffer byte count will normally show the number of bytes ready for transmission at all times except during the time just after a transmission and before the next scan at which time it will report zero bytes.

When using a Signal Engineering radio the data is loaded into the radio only on the scan just before the transmission occurs. In this case the ST buffer Byte count value will normally show a value of 0 except between the time after the scan just before the transmission and the transmission itself.

Transmit ST Data?:
The option is used to test the Self-Timed options setup. If this option is selected, the GOES radio will transmit a Self-Timed transmission. It is recommended that the output of the GOES Radio be connected to a dummy load. This option can then be used to test the output power of the transmitter using a Watt Meter. The user should use caution when using this option. If the user sends off intermittent transmissions on the ST channel, the user runs the risk of interfering with another user's transmission. All intermittent transmission should be transmitted on the Random channel.

5.9 Random Options

This is the main screen that allows access to the setup options for Random transmissions. Several of the screens use the abbreviation RR to indicate one of the Random mode options. Random data will always use the pseudo-binary format and the data will be preceded with the characters "BRT".

```
GOES Options      ->  Random Options->  RR Channel [000]
                                        RR Rate [HH:MM:SS]
                                        RR Baud Rate [100 ]
                                        Tx Fnt[0          ]
                                        RR Data Opts     ->  Source 1 [None  ]
                                              |                    :
                                              |                Source 5 [None  ]
                                        RR Buffer Cnt = XXXX
                                        Transmit RR Data?
```

RR Channel [000]:
This option allows the user to enter the Random transmission channel number. The range is 1 to 199 and represents a specific frequency for communicating with the satellite. The channel number will be assigned by NOAA.

RR Rate [HH:MM:SS]:
This option allows the user to set a window length used by the radio to generate a random time to transmit the data. When data is placed in the random transmit buffer of the radio, that data will be transmitted at some random time in the time window set by the "RR Rate" option. For example, let's assume a random rate of 30 minutes. When data is sent to the random buffer, the transmission is randomly scheduled at some time within the next 30 minutes.

RR Baud Rate [100]:
This option is used to set the baud rate for the Random transmissions. This may be different than the Self-Timed transmission baud rate. This option is dependent on the radio type and will be 100, 300 or 1200 baud. This will also be assigned by NOAA.

Tx Fnt[0]:
This screen displays the conditional statement used to see if a random transmission should be sent. This statement is normally a logical expression that evaluates to true or false. For example, "ana1>10.0" would equate to true if the value for analog channel 1 was greater than 10.0 and would equate to false if it was less than 10.0. Logical expressions return a value of 1.0 if true and 0.0 if false. If the conditional statement is true then a random transmission will be scheduled.

The trigger condition is actually true for any value that is greater than 0.0 and is false for any value that is 0.0 or less. This allows for standard math expressions also to be used for the trigger condition. For example, if a temperature probe was connected to analog channel 1 that measured temperature in degrees F, a math equation like "(ana1-32)*-1" could be used to trigger a transmission any time the temperature was below 32 degrees F. If the temperature was at or above freezing (32 degrees) the results of the equation would be zero or negative and would be considered false, otherwise it would be positive and would be true.

The conditional statement can be up to 48 characters and can be based on multiple conditions as shown in the next example: "(ana1>10.0)&(counts>0.05)." In this example the value for analog channel 1 must be greater than 10.0 **AND** the counts input (normally rain fall) must be greater than 0.05.

If the conditional statement is greater than 48 characters, then just reference one of the user definable general purpose functions as the conditional statement and enter the real conditional statement in the selected user function. The conditional statement can be edited using the local display/keypad or by using the PC menu interface. See the section on "User Definable Functions" in chapter 4 for a complete understanding on how to enter, edit and evaluate the math and logic functions.

RR Data Opts ->:
The submenus under this option allow the user to select the data to be sent to the radio and the order. Defining the options here is like defining columns in a spreadsheet. Source #1 will be the first data value sent to the GOES Radio, Source #2 the next and so on. Valid options are the same as those for the ST Data Opts including Date, Time, Battery Voltage, etc. There are a total of five screens under the "RR Data Opts ->" menu that allow the user to select up to five different data values to be sent to the radio for a random transmission.

GOES Options ->	Random Options ->	RR Data Opts ->	Source 1 [None]
			:
			Source 5 [None]

RR Buffer Cnt = XXXX:
This is a status screen that shows how many bytes are in the Random transmit buffer of the radio.

Transmit RR Data?:
Pressing the ENTER Key will cause the system to immediately send the data defined in the RR Data Options menu. This may be useful for testing the system. The radio will not send data if the ENTER Key is pressed quickly as there must be a 1 minute delay between transmissions.

5.10 GOES Radio Setup Example

The following example assumes that NOAA assigned the following settings for the application.

DCP Address	=	ABCD1234
ST Channel #	=	56
ST Rate	=	04:00:00 (4 hours)
ST Offset	=	02:37:00
ST Baud Rate	=	300
ST Window	=	20 seconds

The options would be setup as follows:

Radio Type:	[SE-300]
GOES Mode:	[Timed]
GOES Time:	[00:11:22] (set to Universal Standard Time)
GOES Adrs:	[ABCD1234]
GOES Preamble:	[Short]
ST Channel:	[056]
ST Rate:	[04:00:00]
ST Offset:	[02:37:00]
ST Baud Rate:	[300]
ST Window:	[1 Min]
ST Data Fmt:	[SHEF]
Data Order:	[Scan]
Data First:	[Newest]
Send SHEF Codes:	[No]
Append Batt Valu:	[Yes]
Scans / Xmit:	[32]
ST Data Opts	See the table below

Source 1 [Encodr]->	Source 2 [Anal]->	Source 3 [SDI01]->	Source 4 [None]->
SHEF Code 1 [HG] ->	SHEF Code 2 [TA] ->	SHEF Code 3 [PR] ->	SHEF Code 4 [ ] ->
Skip Rate 1 [01] ->	Skip Rate 2 [01] ->	Skip Rate 3 [01] ->	Skip Rate 4 [01] ->
Format 1[XX.XX]->	Format 2[XX.XX]->	Format 3[XX.XX]->	Format 4[XX.XX]->

Also assume that the Scan Rate is set to 15 minutes.

Note that with a 15 minute scan rate and a 4 hour transmission rate, there will be 16 scans for every GOES transmission. Since the "ST Scans / Xmit" option is set to 32, then there will be 16 new scans plus 16 old scans transmitted. The latter 16 are redundant and should have been transmitted as the 16 new scans in the previous transmission.

There are three values being sent in a SHEF (ASCII) format and each value is formatted for 5 bytes. There is also a space between data values and a carriage return and line feed for every line. In this case 4 more bytes per line for a total of 19 bytes per line or 19 bytes per scan. This value multiplied by the number or scans (32) give the number of bytes per transmission, 19 * 32 = 608. At 300 baud the 608 bytes would be approximately 21 seconds. This is ok for a 30 second window but too long to fit in the 20 second window. To fix this, several things could be changed; the data could be sent in a binary format, less values could be sent to the Radio, or the scans per transmission could be set to 16 allowing only new data to be sent.

For this example, assume the "Scans / Xmit" option is set to 16. This reduces the amount of data to 304 bytes. At 300 baud the 304 bytes would take about 10 seconds. At 10 seconds a margin of 10 seconds is available for the preamble and non-data information. This would fit well in a 20 second window allowing plenty of time for any clock drifting.

5.11 GOES Binary Data

The self-timed binary transmission and all random transmission formats use a 6-bit per byte pseudo binary format. The GOES system supports 1, 2, 3, and 4 byte values with 6, 12, 18, and 24-bit precision respectfully. The H-500XL™ will use 3 bytes (18 bits) for the main input data values. The appended battery voltage will use a single byte (6 bits). The time and date will also use only one byte each for minute, hour, day, and month. However date and time are very seldom transmitted through the GOES system, and if so, mainly for testing purposes. The following shows the byte format:

1 Byte Value:

BIT 7	BIT 6	BIT 5	BIT 4	BIT 3	BIT 2	BIT 1	BIT 0
Parity	Always 1	DATA 5	DATA 4	DATA 3	DATA 2	DATA 1	DATA 0

3 Byte Value:

BYTE 3								BYTE 2								BYTE 1							
23	22	21	20	19	18	17	16	15	14	13	12	11	10	9	8	7	6	5	4	3	2	1	0
P	1	D 17	D 16	D 15	D 14	D 13	D 12	P	1	D 11	D 10	D 9	D 8	D 7	D 6	P	1	D 5	D 4	D 3	D 2	D 1	D 0

With bit 7 used for parity and bit 6 always set to '1' each byte is forced to be a printable character in the ASCII table. Valid characters along with the weighted values are listed in the GOES PSEUDO-BINARY LOOK UP TABLE on the next page.

Instructions for using the GOES PSEUDO-BINARY LOOK-UP TABLE:
A GOES pseudo binary byte is represented by one character. All data values (except battery voltage, time and date) will be made up using three pseudo-binary bytes. To use the table, look up the weight of each pseudo-binary character using the column according to the relative position of the character in the three byte pseudo-binary value as transmitted by the H-500XL™. To obtain the original value, add the weights of all three characters. If the value is greater than 131071, subtract it from 131072. Finally, divide the number by 100. The following examples illustrate this procedure.

H^g = (32768 + 1920 + 39) / 100 = 347.27

H	left position	=	32768
^	middle position	=	1920
g	right position	=	39

	Total	=	34727

divide by 100 = 347.27 = final result.

agB = (131072 - (135168 + 2496 + 2)) / 100 = -65.94

a	left position	=	135168
g	middle position	=	2496
B	right position	=	2

	Total	=	137666

Note that 137666 is greater than 131072

	131072
V.	137666

=	-6594

divide by 100 = -65.94 = final result.

5.12 GOES PSEUDO-BINARY LOOK-UP TABLE

PSEUDO BINARY CHAR	3rd CHAR FROM RIGHT	2nd CHAR FROM RIGHT	RIGHT MOST CHAR	PSEUDO BINARY CHAR	3rd CHAR FROM RIGHT	2nd CHAR FROM RIGHT	RIGHT MOST CHAR	SINGLE BYTE BATTERY VALUE
@	0	0	0	`	131072	2048	32	10.30
A	4096	64	1	a	135168	2112	33	10.62
B	8192	128	2	b	139264	2176	34	10.93
C	12288	192	3	c	143360	2240	35	11.25
D	16384	256	4	d	147456	2304	36	11.56
E	20480	320	5	e	151552	2368	37	11.87
F	24576	384	6	f	155648	2432	38	12.18
G	28672	448	7	g	159744	2496	39	12.49
H	32768	512	8	h	163840	2560	40	12.81
I	36864	576	9	i	167936	2624	41	13.12
J	40960	640	10	j	172032	2688	42	13.43
K	45056	704	11	k	176128	2752	43	13.74
L	49152	768	12	l	180224	2816	44	14.06
M	53248	832	13	m	184320	2880	45	14.37
N	57344	896	14	n	188416	2944	46	14.68
O	61440	960	15	o	192512	3008	47	15.00
P	65536	1024	16	p	196608	3072	48	15.31
Q	69632	1088	17	q	200704	3136	49	15.62
R	73728	1152	18	r	204800	3200	50	15.93
S	77824	1216	19	s	208896	3264	51	16.24
T	81920	1280	20	t	212992	3328	52	
U	86016	1344	21	u	217088	3392	53	
V	90112	1408	22	v	221184	3456	54	
W	94208	1472	23	w	225280	3520	55	
X	98304	1536	24	x	229376	3584	56	
Y	102400	1600	25	y	233472	3648	57	
Z	106496	1664	26	z	237568	3712	58	
[	110592	1728	27	{	241664	3776	59	
\	114688	1792	28	|	245760	3840	60	
]	118784	1856	29	}	249856	3904	61	
^	122880	1920	30	~	253952	3968	62	
_	126976	1984	31	?	258048	4032	63	

5.13 Common GOES Terms

Baud Rate: GOES data is transmitted from the DCP to the GOES satellite at a baud rate of 100, 300, or 1200 bits per second.

DAMS: Data Acquisition and Monitoring System.

DAPS: Data Collection System Automated Processing Subsystem.

DCP: Data Collection Platform. A data logger or data recording system capable of gathering data from different sensors and transmitting data via a GOES Radio.

DCS: Data Collection System. See DCP.

DOMSAT: Domestic Communication Satellite. A commercial satellite used to rebroadcast GOES data.

DRGS: Direct Readout Ground Station. A receiver capable of receiving data directly from the GOES satellite.

DPS: Data Processing System.

GMT: Greenwich Mean Time. All DCPs are assigned a time slot in which they are allowed to transmit. All DCPs must have an accurate time clock set to GMT in order to make sure they transmit only during the assigned time slot.

GOES: Geostationary Operational Environmental Satellite. DCP or DCS systems transmit data to the GOES. There are two functional satellites used for DCP operation, both are at a fixed position above the earth. One in the eastern sky and one in the western sky. This allows DCP antennas to be aimed at a fixed point for optimal operation.

LRGS: Local Readout Ground Station. A receiver capable of receiving data from the DOMSAT satellite.

NESDIS: National Environmental Satellite, Data, and Information Service.

NIST: National Institute for Standards and Technology.

NOAA: National Oceanic and Atmospheric Administration.

NWS: National Weather Service.

PDT: Platform Description Table.

! Each DCP will have a PDT defined on a computer system at NESDIS. If the table is not completely defined, the error message "PDT RECORD IS NOT COMPLETE" will appear when the data is retrieved. This table describes site information as well as the Radio manufacturer and model number. Information for the Telonics Radio is:

Manufacturer: "Telonics, INC."
Model Number: "TGT-1"

The information for the Signal Engineering Radios is:

Manufacturer: "Signal Eng."
Model Number: "SE100" or "SE300" or "SE1200"

Preamble: This is a carrier signal sent to the satellite before any data is sent.

Signal Type	Short Preamble	Long Preamble
Preamble Length	0.98 seconds	7.3 seconds

SHEF Code: A two character code that describes the DCP message data type. Common Shef codes are shown below.

HG= Height of the Gage (Stage)
TA= Temperature of the Ambient
VB= Voltage of the Battery

Transmission Window: The scheduled time interval which a DCP can transmit data in the Self-Timed mode. This can be a value from one-minute down to five seconds. GOES Radios using the higher baud rates may be assigned a shorter window.

UDT: User Description Table.

5.14 Julian Day Tables

Julian Day Table (Non Leap Year)

1	32	60	91	121	152	182	213	244	274	305	335
2	33	61	92	122	153	183	214	245	275	306	336
3	34	62	93	123	154	184	215	246	276	307	337
4	35	63	94	124	155	185	216	247	277	308	338
5	36	64	95	125	156	186	217	248	278	309	339
6	37	65	96	126	157	187	218	249	279	310	340
7	38	66	97	127	158	188	219	250	280	311	341
8	39	67	98	128	159	189	220	251	281	312	342
9	40	68	99	129	160	190	221	252	282	313	343
10	41	69	100	130	161	191	222	253	283	314	344
11	42	70	101	131	162	192	223	254	284	315	345
12	43	71	102	132	163	193	224	255	285	316	346
13	44	72	103	133	164	194	225	256	286	317	347
14	45	73	104	134	165	195	226	257	287	318	348
15	46	74	105	135	166	196	227	258	288	319	349
16	47	75	106	136	167	197	228	259	289	320	350
17	48	76	107	137	168	198	229	260	290	321	351
18	49	77	108	138	169	199	230	261	291	322	352
19	50	78	109	139	170	200	231	262	292	323	353
20	51	79	110	140	171	201	232	263	293	324	354
21	52	80	111	141	172	202	233	264	294	325	355
22	53	81	112	142	173	203	234	265	295	326	356
23	54	82	113	143	174	204	235	266	296	327	357
24	55	83	114	144	175	205	236	267	297	328	358
25	56	84	115	145	176	206	237	268	298	329	359
26	57	85	116	146	177	207	238	269	299	330	360
27	58	86	117	147	178	208	239	270	300	331	361
28	59	87	118	148	179	209	240	271	301	332	362
29		88	119	149	180	210	241	272	302	333	363
30		89	120	150	181	211	242	273	303	334	364
31		90		151		212	243		304		365

Julian Day Table (Leap Year)

1	32	61	92	122	153	183	214	245	275	306	336
2	33	62	93	123	154	184	215	246	276	307	337
3	34	63	94	124	155	185	216	247	277	308	338
4	35	64	95	125	156	186	217	248	278	309	339
5	36	65	96	126	157	187	218	249	279	310	340
6	37	66	97	127	158	188	219	250	280	311	341
7	38	67	98	128	159	189	220	251	281	312	342
8	39	68	99	129	160	190	221	252	282	313	343
9	40	69	100	130	161	191	222	253	283	314	344
10	41	70	101	131	162	192	223	254	284	315	345
11	42	71	102	132	163	193	224	255	285	316	346
12	43	72	103	133	164	194	225	256	286	317	347
13	44	73	104	134	165	195	226	257	287	318	348
14	45	74	105	135	166	196	227	258	288	319	349
15	46	75	106	136	167	197	228	259	289	320	350
16	47	76	107	137	168	198	229	260	290	321	351
17	48	77	108	138	169	199	230	261	291	322	352
18	49	78	109	139	170	200	231	262	292	323	353
19	50	79	110	140	171	201	232	263	293	324	354
20	51	80	111	141	172	202	233	264	294	325	355
21	52	81	112	142	173	203	234	265	295	326	356
22	53	82	113	143	174	204	235	266	296	327	357
23	54	83	114	144	175	205	236	267	297	328	358
24	55	84	115	145	176	206	237	268	298	329	359
25	56	85	116	146	177	207	238	269	299	330	360
26	57	86	117	147	178	208	239	270	300	331	361
27	58	87	118	148	179	209	240	271	301	332	362
28	59	88	119	149	180	210	241	272	302	333	363
29	60	89	120	150	181	211	242	273	303	334	364
30		90	121	151	182	212	243	274	304	335	365
31		91		152		213	244		305		366

Chapter 6
Operation With the H-355 "Smart Gas" System

6.1 Introduction to the H-355

The H-500XL™ has special functions for operation with the *WATER*LOG® Model H-355 gas purge system. The *WATER*LOG® Series Model H-355 (hereafter "H-355") is a self-contained "SMART GAS" purge system used to measure fluid levels in applications such as surface water (streams and lakes, etc.), ground water, and tanks. It contains a small holding tank and a compressor, and it is designed to replace the Nitrogen tank and regulators used in traditional gas purge systems.

When combined, the H-500XL™ and H-355 communicate back and forth via the RS-485 link. The H-500XL™ has a submenu dedicated to changing the configuration of the H-355.

6.2 Configuring the H-355

The following is a description of the submenu used for configuring the H-355. Each of these menu items may be changed or edited using the normal H-500XL™ editing techniques.

Accessory Setup ->	Gas Purge Setup ->	Auto Purge Enbl[OFF]
		Bubble Rate[60]/min
		Purge Thresh[20]PSI
		Purge Presur[40]PSI
		Purge Time [30] Sec
		Manual Purge?
		Timed Prg [00] days
		Tank PSI = X.XX
		Line PSI = X.XX
		Last Prg=MM/DD HH:MM
		Purged 000 Times

6.2.1 Auto Purge Option

The H-500XL™ can sense when the orifice line is restricted or plugged. The H-355 can be configured to do an automatic purge of the orifice line when it becomes necessary. This menu item turns the auto purge on or off. This does not control the timed purge option.

Accessory Setup ->	Gas Purge Setup ->	Auto Purge Enbl[OFF]

6.2.2 Bubble Rate Option

This refers to the average number of bubbles per minute that are flowing from the end of the orifice tube. The programmable range is 30 to 120 bubbles per minute.

Accessory Setup ->	Gas Purge Setup ->	Bubble Rate[60]/min

One reason for changing the bubble rate is to set how quick the system will respond to a rise in the stage. The following table shows the approximate time needed to react to a one foot rise in stage for the different bubble rates. Note this is at a depth of one foot. At greater depths the time will increase slightly.

Bubble Rate (Bubbles / Minute)	Response Time For 1.0 Foot Stage Rise (at a depth of one foot)
30 Bubbles / Min	25 Seconds
60 Bubbles / Min	20 Seconds
120 Bubbles / Min	15 Seconds

Another reason for changing the bubble rate may be to reduce noise in the data. Some sites have turbulent water conditions creating water level data that looks "jittery." The bubble rate may be changed up or down to find an optimal point to reduce this noise. Normally a combination of changing the bubble rate and the averaging time to produces the best results. The default values work best in the majority of the applications providing desirable results in a timely manor.

6.2.3 Purge Threshold Level

The purge threshold is the amount of pressure required to cause the H-355 to automatically purge the line. This must be set to a value above the highest water level possible. For example if a river may reach 30 feet but not higher, this is the same as 13 PSI, in this case the purge threshold could be set to 15 PSI, (or 34.6 feet). If the orifice line pressure reaches the purge threshold, indicating a blocked line, the H-500XL™ will initiate an auto purge. If the purge is successful, normal operation will continue. If the purge fails, the H-355 will not try another purge until 24 hours later. The H-355 enters this mode of operation to preserve the battery in case of a plugged orifice. The range of "Purge Thresh" is 10 to 65 PSI.

Accessory Setup ->	Gas Purge Setup ->	Purge Thresh[20]PSI

6.2.4 Purge Pressure Level

This is the pressure that the H-355 uses to purge the orifice line. The range is 15 to 80 PSI. This must be set higher than the purge threshold.

Accessory Setup ->	Gas Purge Setup ->	Purge Presur[XXX]PSI

6.2.5 Purge Time Duration

This is the duration of a purge in seconds. The range is 30 to 240 seconds. Higher purge pressure values require more time for the purge to complete properly. If the purge time is too short the pressure in the tank will be abnormally high causing a much higher bubble rate. The abnormally high bubble rate may cause stage readings to be slightly higher than expected. If the H-355 compressor turns on after the purge is done then the purge time is long enough. The worst case would also be at lower water levels as more air would have to be released from the tank.

Accessory Setup ->	Gas Purge Setup ->	Purge Time [30] Sec

6.2.6 Manual Purge Option

Pressing the ENTER key on this item will cause the H-355 to perform a purge using the current purge settings. If the battery voltage is approximately 11.25 volts or less, then the purge will not happen.

Accessory Setup ->	Gas Purge Setup ->	Manual Purge?

6.2.7 Timed Purge Option

This option is used to force a purge every XX days. The limits are 00 to 99 days. If the option is set to 00 then this option is in affect disabled. A value of 01 will cause a purge every day, and so on. The purge will happen following the first scan after noon (12:00:00).

Accessory Setup ->	Gas Purge Setup ->	Timed Prg [00] days

6.2.8 Tank Pressure Status

This is the current pressure of the H-355's internal air tank in PSI. This value is informative only and cannot be edited. The tank pressure should be approximately 3 to 5 PSI greater than the orifice line pressure. This pressure should be in the range of about 1 PSI up to about 50 PSI depending on the bubble rate, the water level and the PSI range of the system. The tank pressure will be very low in shallow water with a slow bubble rate.

Accessory Setup ->	Gas Purge Setup ->	Tank PSI = X.XX

6.2.9 Line Pressure Status

This is the current pressure the H-355 sees on the orifice line. This pressure should always be less than the tank pressure. The difference between this pressure and the tank pressure is what determines the bubble rate. The difference should be about 3 to 5 PSI. As the water level rises the line pressure will increase, approaching the tank pressure. The H-355 detects this rise in pressure and will turn on the compressor in order to rise the tank pressure, therefore maintaining the desired bubble rate.

Accessory Setup ->	Gas Purge Setup ->	Line PSI = X.XX

6.2.10 Last Purge Status

This is a status screen that indicates when the last purge happened. This will only be updated if the purge was caused or initiated by the H-500XL™. If the purge was caused by pressing the button provided on the H-355 then this will not be updated.

Accessory Setup ->	Gas Purge Setup ->	Last Prg=MM/DD HH:MM

6.2.11 Purged XXX Times

This is a status screen that indicates how many times the H-355 has purged. Pressing the ENTER key will reset this value to 000. This value is useful to see that the unit has been purging since the last visit.

Accessory Setup ->	Gas Purge Setup ->	Purged 000 Times

6.3 H-355 Configuration Drawing

Figure 6-1 shows the H-500XL™ and H-355 connected as a system. Follow the instructions in Chapter 2 of this manual and the H-355 user's manual to make connections between the two devices.

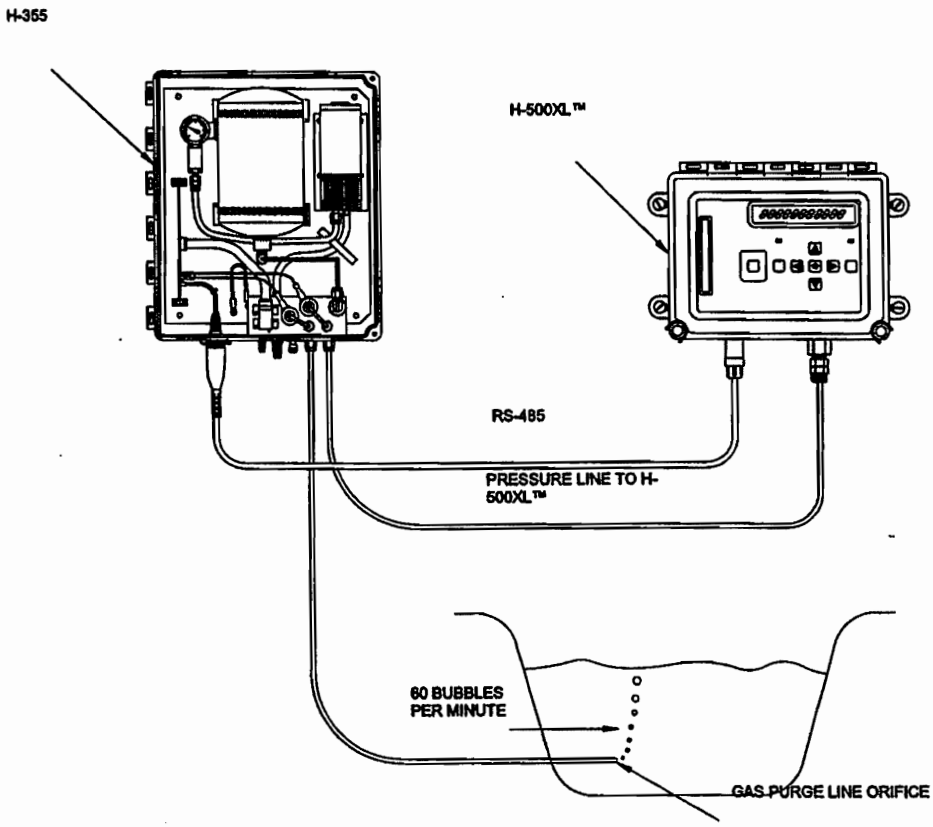

Figure 6-1 H-500XL™/H-355 Pressure Measurement System

Chapter 7
Maintenance/Trouble Shooting

7.1 Maintenance

Sustained operation of the H-500XL™ is almost maintenance-free. There are no desiccant or serviceable parts to maintain. As with any precision instrument, the calibration should be checked or verified on a regular basis.

7.2 Trouble Shooting

It is unlikely that this manual will ever contain trouble shooting tips to cover every problem that will be encountered. Feedback from customers is very valuable and greatly aids in the quest for constant product enhancement. Please feel free to call the factory for technical assistance and also with solutions you have found to past problems.

Our experience with pressure transducers has taught us a lot about the problems associated with field installed equipment. The following list of problems and possible solutions will undoubtedly grow with subsequent revisions of this manual and may be helpful to you.

No SDI-12 Response:

1) Verify power to the H-500XL™.

2) Check all SDI-12 connections, including DATA and GND.

3) Check the pin out of your Data Recorder for correct wiring.

4) Make sure all sensors have a unique address.

Intermittent Data:

1) Check your power and ground connections. Moisture over time will oxidize and corrode connectors and pins.

2) Verify your power supply or battery voltage. As the power supply approaches the lower threshold of the H-500XL™ supply range, it may begin to miss readings intermittently.

3) Read the status messages, Min, and Max values, and system resets of the H-500XL™ for a possible malfunction or clue to the problem.

Wrong or Erratic Data:

1) Check the sensor status window for possible errors. (See section 3.6)

2) Check battery voltage and all connections.

GOES not transmitting:

- Check power to the GOES radio, do so under a load.
- See if the GOES time is correct, if it is stopped, it indicates power to the radio was lost, stopping the clock. The radio will not transmit if the GOES clock is not running.
- Check all antenna wires.
- Check antenna alignment.
- Use a power meter to measure the power output of the radio, and the reflected power.

Appendix A
Specifications

Performance

General Analog Input

Channels:	4 (Single Ended)
Resolution:	16-Bit Resolution (1 Part in 65536)
Accuracy:	±0.02% FS
Input Ranges:	0 to 5 Volts (All Channels) 0 to 500 mV (Additional Input Range Only Available on Channel 1) Accuracy ± 0.15%

Excitation	5.0V Switched, Ratiometric, 10mA max load
Accuracy	± 1.0 mV Over Load and Temperature Range

Frequency Input

Input Range:	1 to 10 KHz at ± 75mVolts or greater 1 to 15 KHz at ± 1 Volt or greater
Input Amplitude:	± 5.0 V Max
Accuracy:	± 0.1%
Resolution:	1/10000 * Reading

Counter Input

Type:	Switch closure or voltage pulse, Internal 50k pull up resistor, falling edge triggered.
Input Voltage:	0-5 Volts
Minimum Pulse Width:	5 mS
Input Frequency:	100Hz (max)

Digital I/O

Channels:	2, Independently configured for input or output
Input Voltage:	0-5 Volt
High Level:	3.5 V (min)
Low Level:	0.8 V (max)

Output Voltage

Low:	0.4 V (max)@ -5mA
High:	3.5V (min)@+5mA

4-20 mA Output

Resolution:	4.0μA

Data Storage

Type:	Non-Volatile FLASH
Size:	4 Mega Byte (Expandable)

Interface

SDI-12	Supports both Master and Slave modes
Protocol:	SDI-12, 7-bit even parity, 1 stop bit
Baud Rate:	1200
RS-232	3 RS-232 Communication Ports
Protocol:	RS-232, 8-bit, no parity, 1 stop bit
Baud Rate:	Programmable

Mechanical Data

Physical

Enclosure:	Sealed, corrosion resistant fiberglass with clear Lexan® window
Size:	7.0 in. wide x 8.5 in. long x 4.3 in. deep
Weight:	4.25 lbs
Mounting:	Hardware supplied for wall mounting

Power

Input Voltage:	10.0 to 16.0 volts DC
Input Current:	Sleep Mode: 5 mA Max Active: 70 mA average display off Active: 250 mA average display on Auto display shut-off after 5 minutes

Environment

Temperature

Operating Temperature Range:	-40 to 60°C
Storage Temperature Range:	-40 to 80°C
Humidity:	0-95% non-condensing

Miscellaneous

Options

Data Logging:	Data is stored internally on MB ATA Compact FLASH Card
GOES:	H-222SE (Signal Engineering Radio)

Accessories:

- Power/SDI-12 cable supplied with base unit
- 9-pin D connector cable required for RS-232 communication available (H-350-RSC)
- 9-pin D Male to Male Gender Changer
- RS-232 Null Modem Adaptor
- Sensor Terminal Block

Warranty

The *WATER*LOG® H-500XL™ is warranted against defects in materials and workmanship for one year from date of shipment.

Note

Specifications subject to change without prior notice due to ongoing commitment to product testing and improvement.

Appendix B
SDI-12 Command and Response Protocol

B.1 SDI-12 Command and Response Protocol

This is a brief description of the Serial Digital Interface (SDI-12) Command and Response protocol used by the *WATERLOG*® Series Model H-500XL™ when used as a sensor. Included is a description of the commands and data format supported by the H-500XL™.

Refer to the document "A SERIAL DIGITAL INTERFACE STANDARD FOR HYDROLOGIC AND ENVIRONMENTAL SENSORS." Version 1.1 November, 1993 Coordinated by Campbell Scientific, Inc., Logan, Utah.

During normal communication, the data recorder sends an address together with a command to the H-500XL™. The H-500XL™ then replies with a "response". In the following descriptions, SDI-12 commands and responses are enclosed in quotes. The SDI-12 address and the command/response block terminators are defined as follows:

"a" Is the sensor address. The following ASCII Characters are valid addresses: "0" to "9", "A" to "Z", and "*". The H-500XL™ can be configured to respond to any of the 36 addresses. Sensors will be initially programmed at the factory with the address of "0" for use in single sensors systems. Addresses "1" to "9" and "A" to "Z", can be used for additional sensors connected to the same SDI-12 bus. Address "*" is a "wildcard" address which selects any sensor, regardless of its actual address.

"!" Is the last character of a command block.

"<cr><lf>" Are carriage return (0D) hex and line feed (0A) hex characters. They are the last two characters of a response block.

Notes:

- All commands/responds are upper-case printable ASCII characters.
- Commands must be terminated with a "!" character.
- Responses are terminated with <cr><lf> characters.
- The command string must be transmitted in a contiguous block with no gaps of more than 1.66 milliseconds between characters.
- All ASCII-Hex commands, arguments and data values are transmitted most significant digit first.

B.2 Measure Command

The Measure Command causes a measurement sequence to be performed. Data values generated in response to this command are stored in the sensor's buffer for subsequent collection using "D" commands. The data will be retained in the sensor until another "M" or "V" command is executed.

Command	Response	Description
"aM!"	"atttn<cr><lf>"	Initiate measurement
"aM1!"	"atttn<cr><lf>"	Additional measurement commands

Where:

a Is the sensor address ("0" to "9", "A" to "Z", or "*").

M (or M1) are upper-case ASCII characters.

ttt Is a three digit integer (000-999) specifying the maximum time, in seconds, the sensor will take to complete the command and have measurement data available in its buffer.

n Is a single digit integer (0-9) specifying the number of values that will be placed in the data buffer. If "n" is zero (0), no data will be available using subsequent "D" commands.

Upon completion of the measurement, a service request "a<cr><lf>" is sent to the data recorder indicating the sensor data is ready. The data recorder may wake the sensor with a break and collect the data any time after the service request is received or the specified processing time has elapsed.

The following table lists the measure commands supported by the *WATER*LOG® H-500XL™ and the responses from the sensor.

H-500XL™ Supported Measurement Commands:

Response to a "aM!" command: (when the system is set to factory defaults)

Command	Response	Time	Values	Description
"aM!"	"a0063<cr><lf>"	6 sec	3	Initiate pressure and temperature measurement

Subsequent Command	Response
"aD0!"	a+xxx.xxx+yyy.yyy+zz.z<cr><lf>

Key	Description	Units
xxx.xxx	Current Stage	Feet (Default)
yyy.yyy	Current Pressure	Pounds-per-Square Inch (PSI)
zz.z	Current Temperature	Centigrade (°C)

Note: The number of parameters returned and their order, can be modified by the user.

Response to a "aM1!" command:

Command	Response	Time	Values	Description
"aM1!"	"a0084<cr><lf>"	8 sec	4	Initiate diagnostic pressure and temperature measurement

Subsequent Command	Response
"aD0!"	a+xxx.xxx+yy.y+XXXXXX+YYYYYY<cr><lf>

Key	Description	Units
xxx.xxx	Current Pressure	Pounds-per-Square Inch (PSI)
yy.y	Current Temperature	Centigrade (°C)
XXXXXX	Current Pressure	Raw Reading
YYYYYY	Current Temperature	Raw Reading

B.3 Initiate Verify Command

The Verify Command causes a verify sequence to be performed. The result of this command is similar to the "aM!" command except that the values generated are fixed test data and the results of diagnostic checksum tests. The data generated in response to this command is placed in the sensor's buffer for subsequent collection using "D" commands. The data will be retained in the sensor until another command is executed.

Command	Response	Description
"aV!"	"atttn<cr><lf>"	Initiate verify sequence

Where:

a Is the sensor address ("0" to "9", "A" to "Z", or "*").

V Is an upper-case ASCII character.

ttt Is a three digit integer (000-999) specifying the maximum time, in seconds, the sensor will take to complete the command and have data available in its buffer.

n Is a single digit integer (0-9) specifying the number of values that will be placed in the data buffer. If "n" is zero (0), no data will be available using subsequent "D" commands.

Response to a "aV!" command:

Command	Response	Time	Values	Description
"aV!"	"@0104<cr><lf>"	10 sec	4	Return fixed data and diagnostic data for testing purposes.

Subsequent Command	Response
"aD0!"	a+123.456+78.9+y+z<cr><lf>

Key	Description	Units
+123.456	Fixed test data	
+78.9	Fixed test data	
y	ROM checksum test	0 = Failed, 1 = Passed
z	Watchdog timer status	0 = Off, 1 = On

B.4 Send Data Command

The Send Data command returns sensor data generated as the result of previous "aM!" or "aV!" commands. Values returned will be sent in 33 characters or less. The sensor's data buffer will not be altered by this command.

Command	Response
"aD0!" through "aD9!"	"apd.d ... pd.d<cr><lf>"

Where:

a Is the sensor address ("0" to "9", "A" to "Z", or "*").

D0..D9 Are upper-case ASCII characters.

p Is a polarity sign (+ or -).

d.d Represents numeric digits before and/or after the decimal. A decimal may be used in any position in the value after the polarity sign. If a decimal is not used, it will be assumed to be after the last digit.

For example: +3.29 +23.5 -25.45 +300

If the number of values returned by a "aD0!" command is less than the number specified by the result of the previous "M" or "V" command, the rest of the data must be collected using "aD1," "aD2!" .... "aD9!" until all values specified have been collected.

If one or more values were specified and a "aD0!" returns no data (a<CR><LF> only), it means that the measurement was aborted and a new "M" command must be sent.

The following is an example of the "aD0!" command. Commands "aD1!" to "aD9!" are not supported or needed.

B.5 Send Acknowledge Command

Response to a "aD0!" command:

Previous command	Response format
"aM!"	"a0163<cr><lf>"

Subsequent Command	Response format
"aD0!"	a+xxx.xxx+yyy.yyy+zz.z<cr><lf>

Key	Description	Units
xxx.xxx	Current Stage	Feet (Default)
yyy.yyy	Current Pressure	Pounds-Per-Square Inch (PSI)
zz.z	Current Temperature	Centigrade (°C)

The Send Acknowledge command returns a simple status response which includes the address of the sensor. Any measurement data in the sensor's buffer is not disturbed.

Command	Response
"a!"	"a<cr><lf>"

Where:

a Is the sensor address ("0" to "9", "A" to "Z", or "*").

B.6 Send Identification Command

The Send Identification command responds with sensor vendor, model, and version data. Any measurement data in the sensor's buffer is not disturbed.

Command	Response
"aI!"	"allcccccccmmmmmmvvvxx...xx<cr><lf>"

Where:

a — Is the sensor address ("0" to "9", "A" to "Z", or "*").

I — Is an upper-case ASCII character.

ll — Is the SDI-12 version compatibility level, e.g. version 1.0 is represented as "10".

cccccccc — Is an 8 character vendor identification to be specified by the vendor and usually in the form of a company name or its abbreviation.

mmmmmm — Is a 6 character field specifying the sensor model number.

vvv — Is a 3 character field specifying the sensor version number.

xx...xx — Is an optional field of up to a maximum of 13 characters to be used for serial number or other specific sensor information not relevant to operation of the data recorder.

Response to a "aI!" command:

"a10 DAAH500XLvvS#nnnnnnVkkk<cr><lf>"

H-500XL™ implementation of optional field:
S#nnnnnnVkkk (12 bytes total)

Where:

"nnnnnn" is a six character sensor serial number
"kkk" is a three digit sensor firmware revision level

E-4 – Articulating Concrete Block Mat Manufacturer Data

Contact Information:

Royal Erosion Control Systems, L.L.C.
Formally International Erosion Control Systems, L.L.C.
30622 Forest Boulevard
P.O. Box 430
Stacy, MN 55079
800-817-3240
www.royalenterprises.net

Cable Concrete™

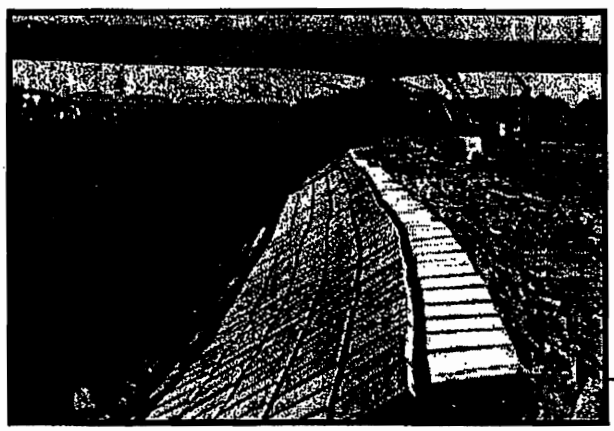

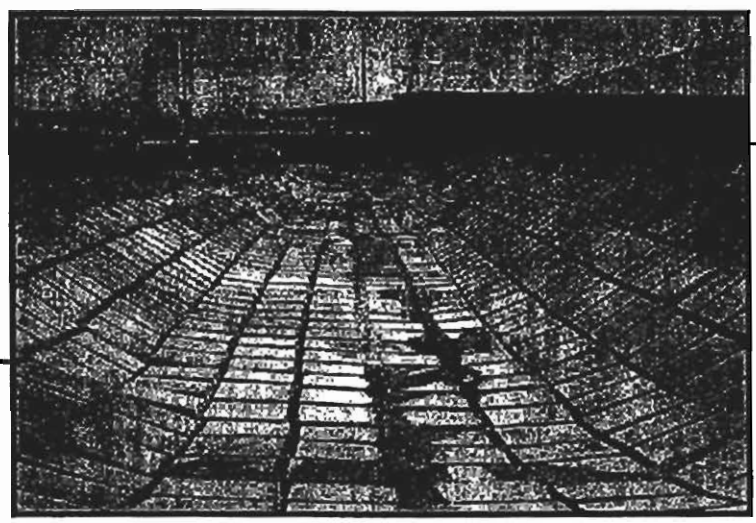

erosion control

Articulating Concrete Block System

protect TODAY by building for TOMORROW

Royal
EROSION CONTROL SYSTEMS, L.L.C.
A Division of Royal Enterprises America

erosion control

Cable Concrete™

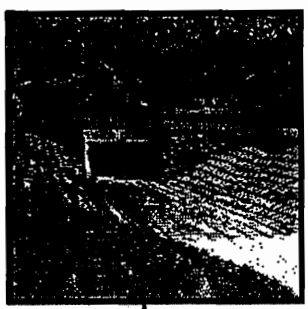

Protects underlying subgrades while allowing beneficial vegetative growth. This mattress system consists of concrete blocks, integral stainless steel cables which are poured into the blocks and pre-attached geotextile fabric.

The innovative design gives the system the flexibility to adapt to ground movement and grade changes while maintaining stability. Cable Concrete is a cost-effective solution for long-term control of erosion for virtually any size/shape project.

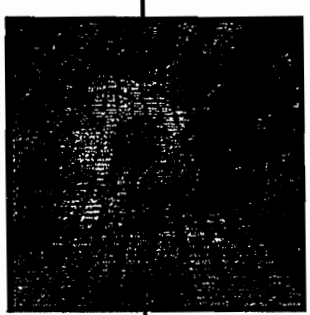

Stability Hydraulic conditions and flow velocities determine the block size and layout design required to stabilize erosive forces. The Cable Concrete mats, with interwoven cable and mat-to-mat clamping, become one homogeneous control system. Cables are precast through each block, assuring both lateral and vertical stability.

Flexibility The pyramidal shape of the blocks provides for large angular variability. This flexibility allows the system to adapt to abrupt changes in grade contours.

Permeability The open area of the mat allows for sufficient transfer of water between the subgrade and the system surface. The attached geotextile fabric allows for relief of hydrostatic pressure without permitting migration of subgrade fines.

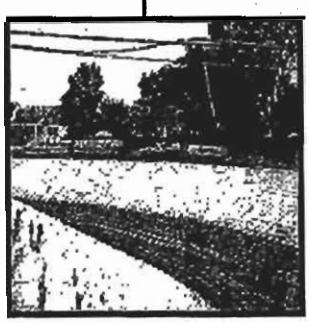

Vegetation Native and exotic grasses, broadleaf plants and shrubs will grow in the open area of the mat if desired. Plants' root systems actually enhance the stability of the system over time. Because the cables are precast into the system, blocks can be removed for larger plantings without compromising system integrity. In addition, the smooth surface allows for pedestrian and vehicle access, as well as easy maintenance of vegetation.

Reusable Cable Concrete mats can be used for temporary erosion control, for construction traffic or emergency situations. The mats can then be lifted for more permanent placement elsewhere or put into storage for the next project.

applications

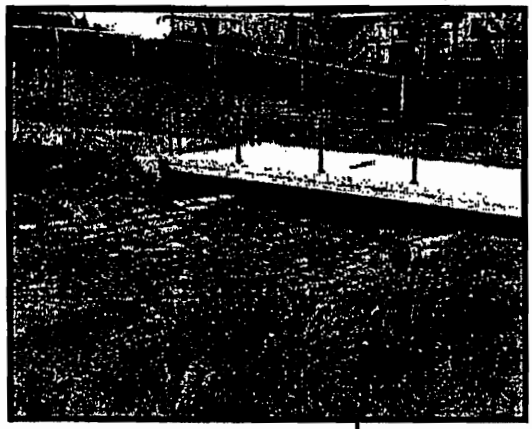

- Channel linings
- Dam/spillway overflow protection
- Lakeshore protection
- Landfill drainage systems
- Boat ramps
- Stream and river bank stabilization
- Slope protection
- Bridge pier and abutment scour protection
- Stormwater pipe and box culvert outlets
- Fire lanes
- Access roads and low-water crossings
- Temporary/emergency erosion control

"Camp Ripley uses Cable Concrete block mat system to control erosion in several locations around our training facility - riverbank, lakeshore and water crossings. We are very pleased with its performance and intend to continue using Cable Concrete for our erosion control needs in the future."

JAY BREZINKA - Environmental Specialist
US Army/National Guard, Camp Ripley, MN

benefits

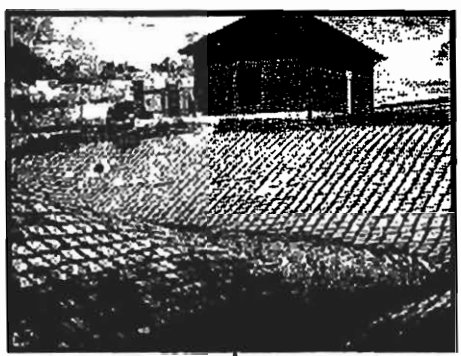

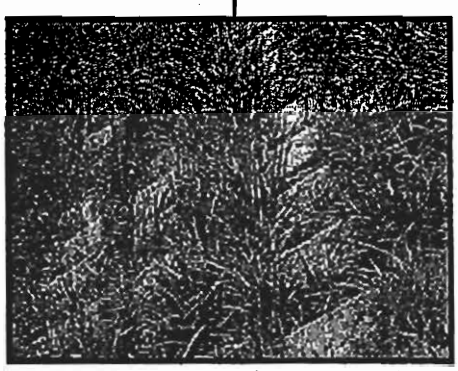

- Innovative design gives the system the flexibility to adapt to ground movement and grade changes while maintaining stability.
- Subgrade preparation time and costs are reduced due to the flexible properties of the mats.
- Hydraulic conditions and flow velocities are considered when determining block size and layout design, so you get the optimal vertical and lateral stability.
- Permits sufficient water transfer between the subgrade and system surface while the geotextile fabric allows hydrostatic pressure relief.
- Open areas within the mats permit plant growth which enhances the system's stability over time.
- Loop cables on mat edges for mat-to-mat connection or optional anchoring.
- Air-entrained concrete for durability and freeze-thaw fracture resistance.
- Royal will supply detailed engineering expertise to aid in the design of your project.
- Remove individual blocks for larger vegetation plantings without compromising structural integrity.
- Exceeds both federal and state D.O.T. requirements.
- Complete engineering analysis, with flume testing, has been conducted by the University of Windsor, Ontario, Canada and the University of Minnesota.

For more information, call:

1-800-817-3240

Royal
EROSION CONTROL SYSTEMS, L.L.C.
A Division of Royal Enterprises America

Original Block - Closed Cell

Cable Concrete Block Specifications

		CC 20 23 lbs. / s.f.		CC 35 41 lbs. / s.f.		CC 45 50 lbs. / s.f.		CC 70 77 lbs. / s.f.	
MAT	AREA	64 s.f.	128 s.f.	64 s.f.	128 s.f.	64 s.f.	128 s.f.	64 s.f.	128 s.f.
	WEIGHT	1455 lbs.	2910 lbs.	2620 lbs.	5240 lbs.	3200 lbs.	6400 lbs.	4950 lbs.	9900 lbs.
	BLOCKS / MAT	36	72	36	72	36	72	36	72
BLOCKS	SPACING @ BASE	0.5 in.		0.5 in.		0.5 in.		0.5 in.	
	SPACING @ TOP	4.5 in.		4.5 in.		4.5 in.		4.5 in.	
	WEIGHT	40 lbs.		73 lbs.		89 lbs.		137 lbs.	
	HEIGHT	2.5"		4.5"		5.5"		8.5"	
CABLE		LENGTH	WIDTH	LENGTH	WIDTH	LENGTH	WIDTH	LENGTH	WIDTH
	DIAMETER	1/8 in.	1/8 in.	5/32 in.	5/32 in.	5/32 in.	5/32 in.	3/16 in.	5/32 in.
	CONSTRUCTION	1 x 19	1 x 19	1 x 19	1 x 19	1 x 19	1 x 19	1 x 19	1 x 19
	BREAKING STRENGTH	2100 lbs.	2100 lbs.	3300 lbs.	3300 lbs.	3300 lbs.	3300 lbs.	4700 lbs.	3300 lbs.
OPEN AREA		8.2%.							

Cable Concrete Mat Design

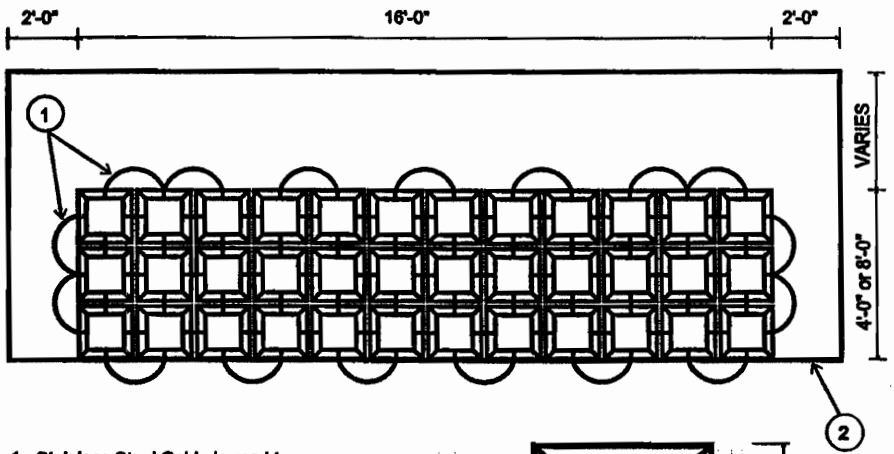

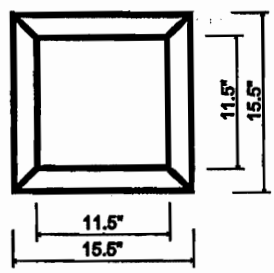

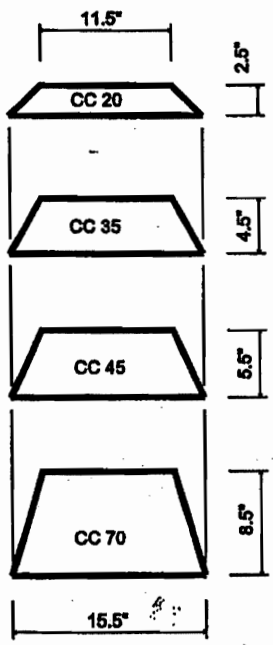

1 - Stainless Steel Cable is used to connect the concrete blocks within the mat. See project specifications.

2 - Geotextile material manufactured on the base of the concrete mat system. See project specifications.

protect TODAY by building for TOMORROW

Royal Enterprises America™

Royal Concrete Pipe, Inc. • Royal Environmental Systems, Inc. • Royal Erosion Control Systems, L.L.C.

Royal Enterprises America • 30622 Forest Blvd • P.O. Box 430 • Stacy, MN 55079

Office: 651 462-1766

Fax: 651 462-6990

Toll Free: 1-800-817-3240

E-5– LSF Cathodic Protection System

Contact Information:

Allied Corrosion Industries, Inc.
1550 Cobb Industrial Drive, N.E.
P.O. Box 9098
Marietta, GA 30065-2098
770-425-1355
www.alliedcorrosion.com

ALLIED CORROSION INDUSTRIES INC.

CATHODIC PROTECTION SYSTEM

MAXEY FLATS DISPOSAL SITE

FLEMING COUNTY, KENTUCKY

OPERATION AND MAINTENANCE MANUAL

JULY 2002

CORPORATE HEADQUARTERS:
1550 Cobb Industrial Drive, N.E.
P.O. Box 9098
Marietta, GA 30065-2098
Tel: 770-425-1355
Fax: 770-425-1354

HOUSTON OFFICE:
P.O. Box 41333
Houston, TX 77241-1333
Tel: 713-467-6003
Fax: 713-467-1174

WWW.ALLIEDCORROSION.COM

Cathodic Protection System Description:

The four (4) components of the system are the Rectifier, Anodes, Junction Box and Reference Electrodes, and are described as follows:

Rectifier:

The rectifier used on this cathodic protection system is an air-cooled single-phase rectifier. The rectifier will be mounted inside the building on the wall. This rectifier is used to supply the DC current that travels from the anodes to the protected structure, which in this case are the stainless steel tanks #1 and 2. The rectifier is powered by standard 120-volt single phase AC

Anodes:

The anode bed for each tank consists of 5 strings of 1.5mm anode wire spliced to a header cable. These anode strings are buried at varying elevations around the tank and the two ends of each cable are run to a junction box, as shown on the enclosed drawings.

Junction Box:

The junction box is will be located on the concrete slab above tank #1. This junction box contains all cable terminations from the anodes and reference cells around the tanks. It contains shunts to measure the amount of current being produced from each anode string. The reference cell lead wires are terminated in the junction box along with test leads from each tank to measure the structure to soil potentials of the tank.

Reference Electrodes or Reference Cells:

The reference cells are used to test, adjust, and monitor the structure-to-soil potentials, which relate to certain levels of Cathodic Protection. There are four (4) reference cells per tank at the locations shown on the drawings.

Minimum Performance Criteria:

The criteria used to determine the status of the cathodic protection system is found in the National Association of Corrosion Engineers (N.A.C.E.) Standard Recommended Practice #RPO285-95. In section 4.2 it states one of the following must be meet:

- 4.2.1.1 A negative cathodic potential of at least 850mV with the cathodic protection current applied. This potential is measured with respect to a saturated copper/copper sulfate reference electrode contacting the electrolyte. Voltage drops other than those across the structure/electrolyte boundary must be considered for valid interpretation of this voltage measurement.

- 4.2.1.2 A negative polarized potential of at least 850mV relative to a saturated copper/copper sulfate reference electrode.

- 4.2.1.3 A minimum of 100mV of cathodic polarization. The formation or decay of polarization can be used to satisfy this criterion.

A description of how to correctly measure to meet these criteria is included later in this report.

MAINTENANCE SPECIFICATIONS:

A) Rectifier:

a. Specifications:

The rectifier is an ALCO model ASAI-50-5AC. The unit contains a silicone diode bridge, and manual adjusting tap bars. A catalog and a schematic of this rectifier are included at the end of this manual.

b. Operation Instructions:

A picture (figure #1) of a similar rectifier is included at the back of this manual detailing the components of the rectifier.

Energizing the rectifier:

The rectifier is energized using the main AC breaker located to on the left side of the panel (See Figure #1). The output is monitored using the voltage and current gauges on the front panel.

First Time Use:

The first time the rectifier is energized, ensure that the tap bars are at the lowest setting. (Course bar at 1, Fine bar at 1) When energized, monitor the voltage and current meters, the readings should be very low at the lowest setting. If the current or the voltage meter pegs out when the rectifier is energized, turn the rectifier off immediately and determine the cause of the short.

If there is no output, refer to section **(c)** for troubleshooting tips.

Adjustment:

Note: Every time the rectifier tap bars are adjusted, the rectifier must be turned off.

The rectifier is classified as a voltage controlled current device. The rectifier current output is increased by increasing the voltage output. The voltage is increased by changing the tap settings at the top of the rectifier. The "FINE" tap bar is increased from 1 – 5, increasing the voltage output each increment. The next tap setting is set by setting the "FINE" back to 1 and increasing the "COURSE" to 2. This output is increased until the desired current output is achieved. The highest tap setting is therefore "COURSE" 3 and "FINE" 6

Calibrating the Meters:

The meters are calibrated as follows:

- Voltmeter: The voltmeter output can be checked by using a multimeter set to the right scale. The voltage is read across the structure and positive terminals at the bottom of the rectifier. Using the screw in the voltmeter face, turn clockwise or counterclockwise to adjust the reading to match that of the multimeter

- Ammeter: The ammeter output can be checked using the provided shunt on the front of the rectifier and a multimeter. Use the multimeter to obtain a voltage across the provided shunt, which will be in millivolts. The shunt has a factor, (noted in Amperes) engraved on the side, which will correspond to a 50mV reading on the multimeter. The current is calculated by the following:

  (Measurement) x (Shunt factor) / 50

  This will give the actual current being output from the rectifier

c. Troubleshooting:

If there is no output from the rectifier the following should be checked:

- Breaker: Check the main breaker in the rectifier to make sure that it is not tripped.

- Fuses: Check all of the fuses using an ohmmeter to ensure that they are not faulty

- Check the actual voltage and current output from the rectifier using the techniques described in the previous section. If there is output, then the meters should be replaced.

- Using a voltmeter, check the main AC input to the rectifier. It should be either 120 volt, or 240 volt. If there is no input voltage, check the main breaker at the breaker panel in the building.

- Check for obvious signs of damage on the rectifier. If there is any severe burn marks, or physical damage, DO NOT RE-ENERGIZE. Send the unit to a qualified person to conduct repairs.

- If the breaker continues to trip, or the fuse blows, have the rectifier inspected by a qualified technician, as this indicates possible diode failure or transformer failure.

d. Parts List and Replacement Costs:

Silicone Diode Bridge:	Model MB12A35S60	$12.85

B) Junction Box:

a. Specifications:

The junction box contains the following:

- 5 resistors to adjust the current output of each anode string
- 5 ea. 0.01ohm shunts to measure the current output of each anode string
- Terminals to connect the anode strings to the appropriate resistor and shunt
- Structure lead terminals from the tank, and negative cable terminal bonded together using a strap
- Test lead terminals for test leads from each tank
- Terminals for each reference cell on the tanks
- Fuse in the positive circuit

A drawing of this junction box is included at the end of the manual (Figure #2).

b. Adjustment and Testing:

The current output of each anode string can be read using the shunts on each of the resistors. To obtain a current reading, a multimeter is required.

- Using the millivolt scale of a multimeter, obtain a reading across the shunt. The reading will be in millivolts. Calculate the current by moving the decimal point one place to the left as follows:

10 Millivolts = 1 Amp

The current produced from each anode string can be adjusted using the resistors in the junction box.

- To increase the current from an anode string, move the slider towards the top until the desired current is produced.
- To decrease the current, move the slider down towards the bottom of the resistor until the desired current is produced.
- Ensure that the slider is tight on the resistor to prevent it from overheating.

Tank to soil potentials are obtained in the junction box by the following method:

- Use a high resistance multimeter
- Place the test lead from the positive terminal on the multimeter to the structure being tested (ie: tank 1 or tank 2)
- Place the test lead from the common terminal on the multimeter to the appropriate reference cell (ie: FF1, FF2, etc.)
- The meter is to be set to the DC VOLTS scale. The reading obtained should be a negative value.

c. Troubleshooting

If no current is being produced from any of the strings, the following should be checked:

- Check the fuse in the junction box using a multimeter
- Check for obvious burn marks on the resistors
- Check the connections, including the slider to ensure that everything is tightly connected
- Check the rectifier to ensure that there is current being produced.

d. Parts Replacement and Prices:

Fuse:	Model L15S20	20A fuse	$5.13

Inspecting the System:

The recommended interval for checking the rectifier output is once a month, not to exceed 2 months. Testing of the status of the cathodic protection should be tested a minimum of once per year.

The annual inspection should include the following:

- Use a multimeter to determine the output of the rectifier and calibrate the meters.
- Check the current produced from each of the anode strings
- Test the continuity between tanks 1 & 2
    - This is obtained by selecting a reference cell in the junction box (ie: FF1) and checking the potential of Tank 1 and Tank 2 with this reference cell. The potentials of tank #1 and tank #2 should be nearly identical.

- Obtain structure to soil potentials for each reference cell location
    - This is completed by leaving the positive test lead from the multimeter on the structure being tested (ie: tank 1) and placing the common lead on each of the 4 reference leads for the tank being tested
    - These readings should be compared to the previous test results. The minimum required potential will be provided after the initial energizing of the cathodic protection system. This minimum potential will satisfy the NACE criteria 4.2.1.1 as described previously in this manual.
    - If the potential is below this minimum potential, increase the amount of current from the anode strings or increase the output of the rectifier. Do not exceed the rated output of the rectifier.

Optional Accessories:

If the rectifier becomes subject to damaging power surges, additional surge protection is available for both the AC input and the DC output.

DC Output:	Pipeline Transmission Protector model #13508	$160.00
AC Input:	Zone Defender model #14101	$195.00-

Product specification sheets have been provided in the back of this manual.

DRAWINGS

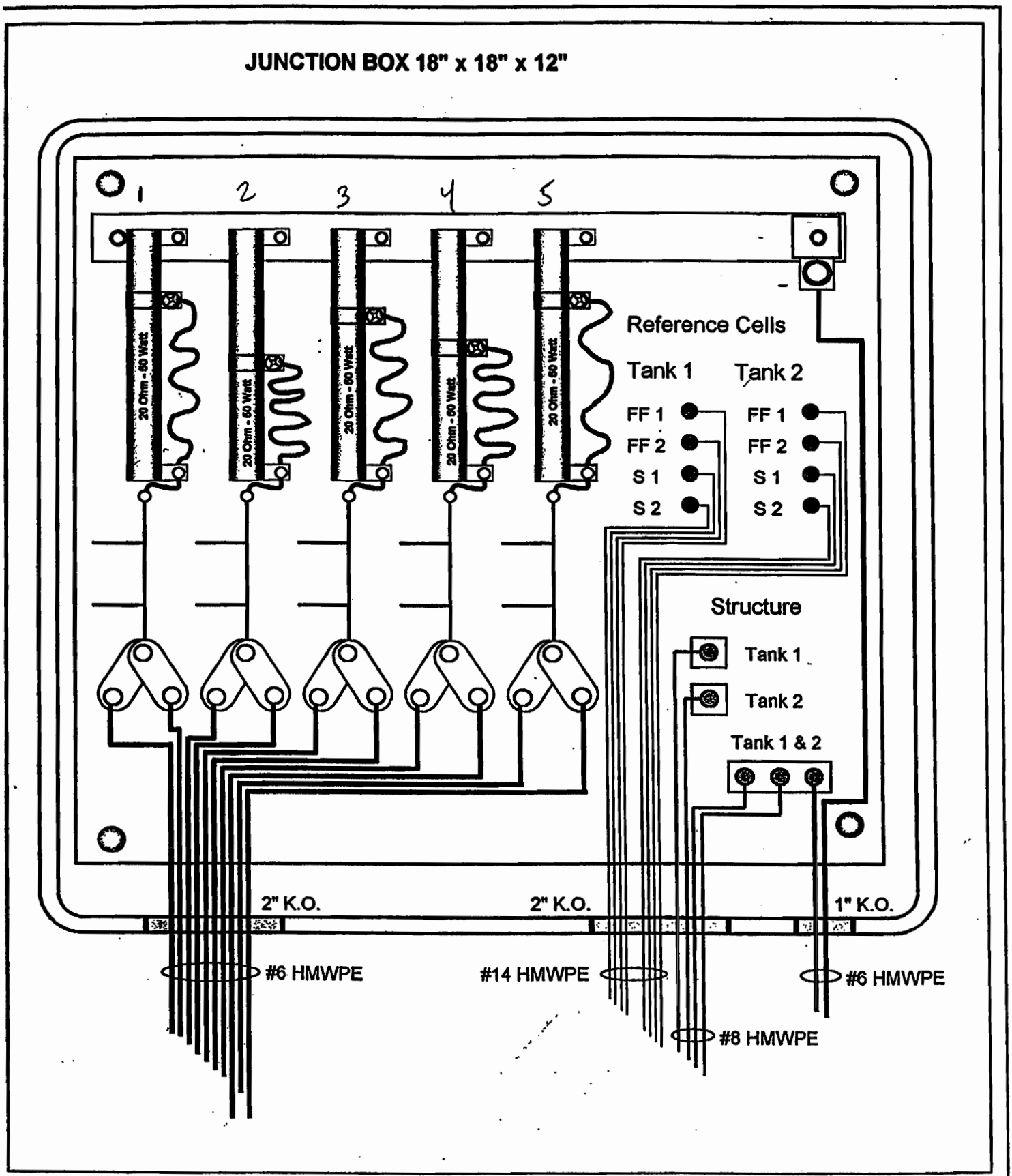

DATE 07/02/02	CHECK BY BWT	Cathodic Protection Circuit Junction Box for Maxey Flats Disposal Site	ALLIED CORROSION INDUSTRIES, INC.	
SCALE NONE			1550 COBB INDUSTRIAL DRIVE, N.E.	
DESIGN BY BWT	APPROVED BWT		MARIETTA, GEORGIA 30066-6611	
DRAWN BY LAM	FILE NO. 2002046		TEL: 770-425-1355 FAX: 770-425-1354	

THIS INFORMATION IS PROPOSED TO MEET REQUIREMENTS BASED UPON DATA FURNISHED BY THE CUSTOMER

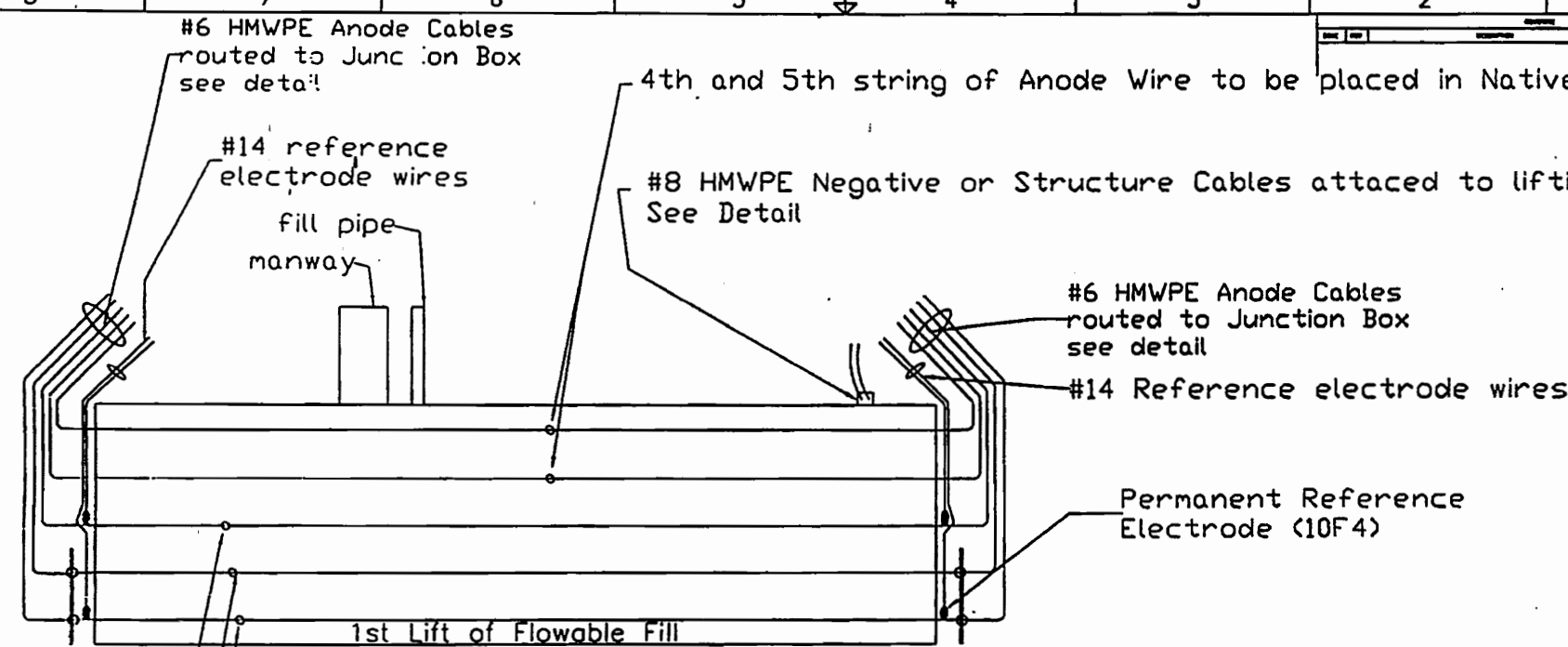

1st string of Anode Wire placed on top of 1st lift of Flowable fill.
1.5mm Elgard Lida Wire spliced to #8 HMWPE Header Cable.
See detail #

2nd string of Anode Wire will be embeded in the 2nd lift of Flowable Fill.

3rd string of Anode Wire will be placed on top of the 2nd lift of Flowable Fill.

#5 x 4' long rebar embeded in first lift of Flowable Fill.
2nd string of Anode wire and cable assembly secured to rebar with cable ties.

All Anode strings except the 2nd string to be secured to the soil or Flowable Fill with U-shaped soil pins.

ALLIED CORROSION INDUSTRIES, INC.

SHAW ENVIRONMENTAL & INFRASTRUCTURE, INC.

PROPOSED CATHODIC PROTECTION ELEVATION
FOR
TANKS #A2
MAXEY FLATS DISPOSAL SITE
FLEMING COUNTY, KENTUCKY

2002-048-02

SHEET 2 OF 4

RECTIFIER

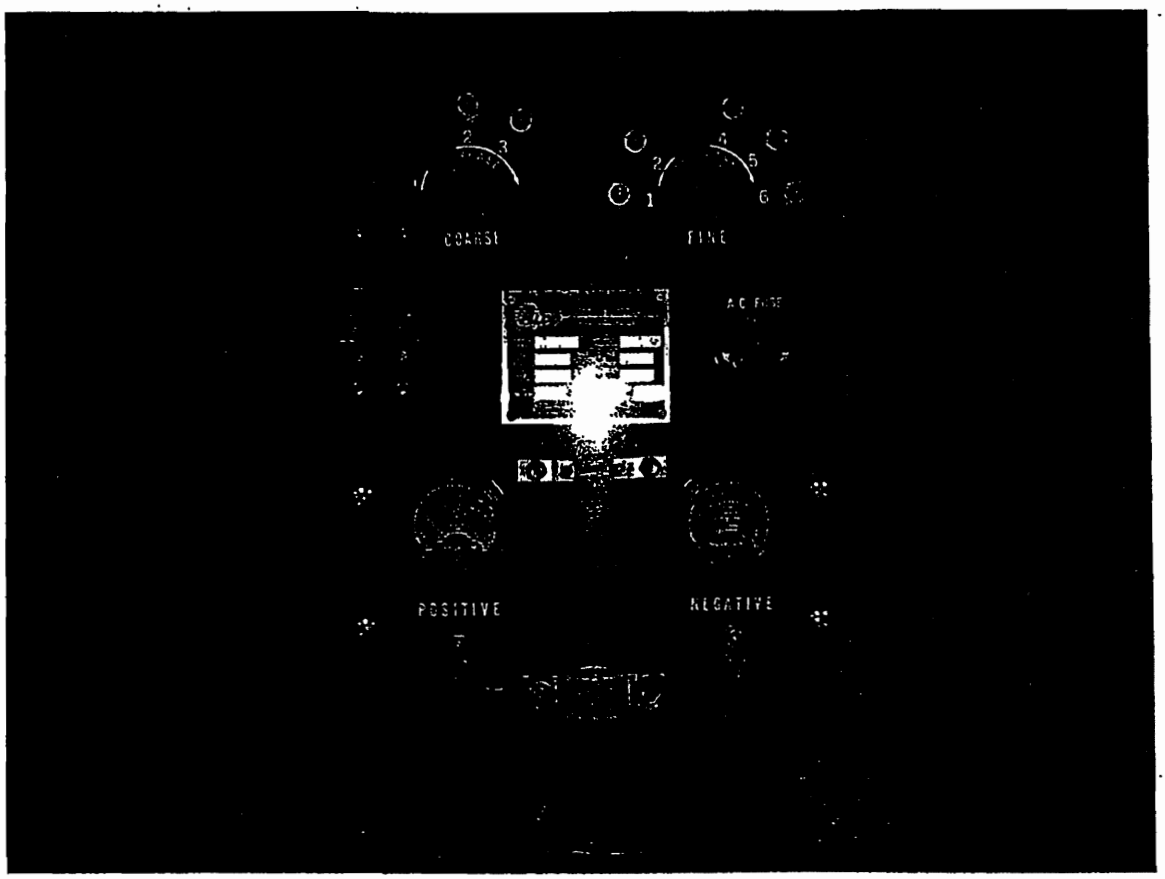

Figure #1 Internal Components of a Rectifier

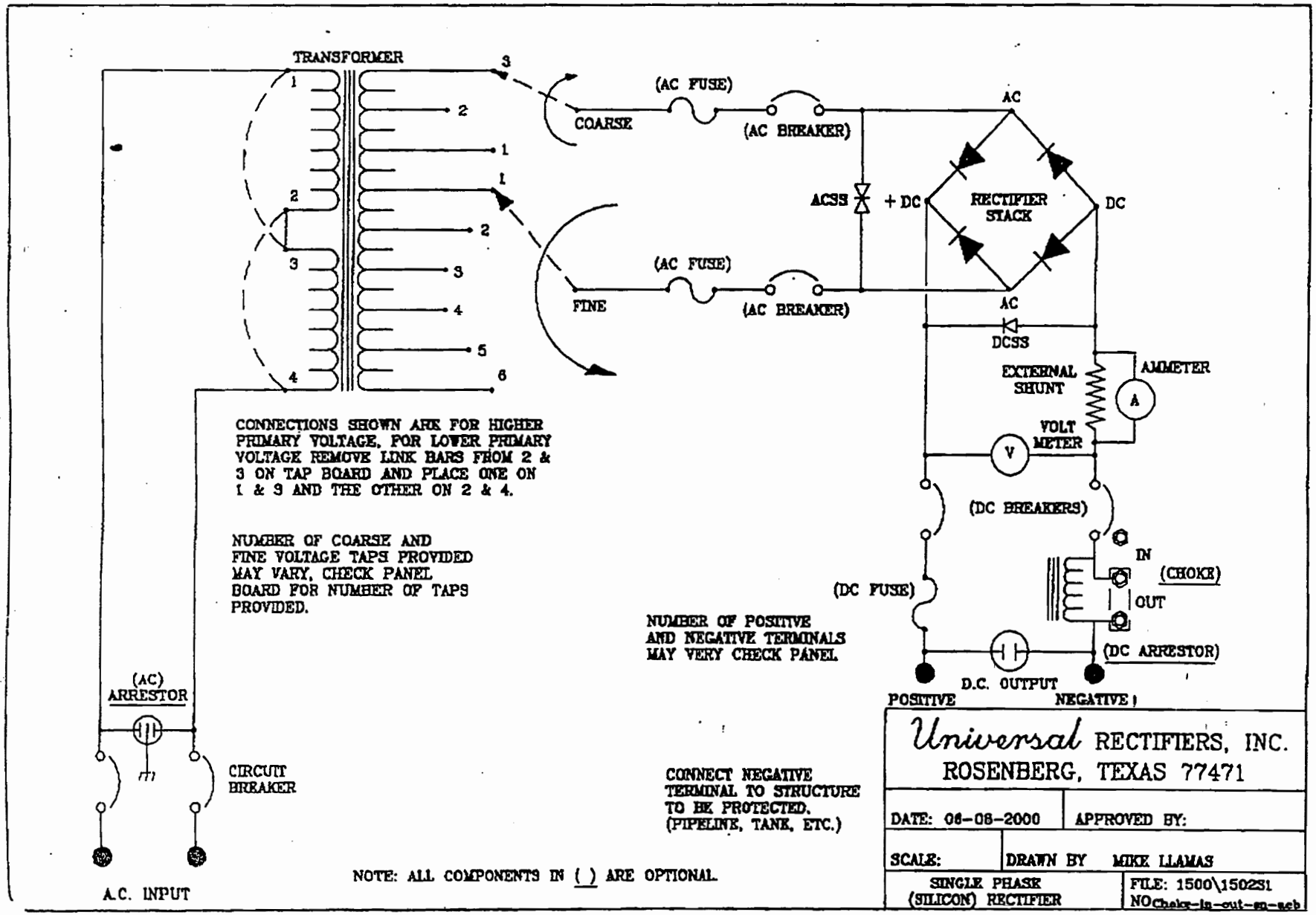
TRANSFORMER
COARSE
FINE
(AC FUSE)
(AC BREAKER)
(AC FUSE)
(AC BREAKER)
ACSS
+ DC
RECTIFIER STACK
AC
DC
AC
DCSS
EXTERNAL SHUNT
AMMETER
A
VOLT METER
V
(DC BREAKERS)
IN
(CHOKE)
OUT
(DC FUSE)
(DC ARRESTOR)
D.C. OUTPUT
POSITIVE
NEGATIVE
CONNECTIONS SHOWN ARE FOR HIGHER PRIMARY VOLTAGE, FOR LOWER PRIMARY VOLTAGE REMOVE LINK BARS FROM 2 & 3 ON TAP BOARD AND PLACE ONE ON 1 & 3 AND THE OTHER ON 2 & 4.
NUMBER OF COARSE AND FINE VOLTAGE TAPS PROVIDED MAY VARY, CHECK PANEL BOARD FOR NUMBER OF TAPS PROVIDED.
NUMBER OF POSITIVE AND NEGATIVE TERMINALS MAY VERY CHECK PANEL
(AC) ARRESTOR
CIRCUIT BREAKER
A.C. INPUT
CONNECT NEGATIVE TERMINAL TO STRUCTURE TO BE PROTECTED. (PIPELINE, TANK, ETC.)
NOTE: ALL COMPONENTS IN ( ) ARE OPTIONAL.
Universal RECTIFIERS, INC.
ROSENBERG, TEXAS 77471
DATE: 06-06-2000
APPROVED BY:
SCALE:
DRAWN BY MIKE LLAMAS
SINGLE PHASE (SILICON) RECTIFIER
FILE: 1500\150231
NOChoke-in-out-sn-seb

OPTIONAL SURGE PROTECTION ACCESSORIES

Atlantic Scientific
MTL Surge Technologies

Manufacturers of Transient Voltage Surge Suppression Products

Proven to cut downtime and replacement part costs

PRODUCT SERIES: ZoneDefender 70kA Series (ZDS)

APPLICATION: The ZoneDefender Series protects sensitive electronic equipment from transients caused by direct or indirect lightning strikes, utility switching and heavy machinery cycling.

Features

- 70,000A per phase
- Solid State Diagnostics
- Ten Mode Protection (L-N, L-G, L-L & N-G)
- Metal Oxide Varistor Technology
- Flush Mount Models Available
- Remote Indication
- Low Impedance Construction
- UL1449 2nd Edition Listed*
- Thermal and Short Circuit Fusing for Safety
- Close Nipple Mount
- Ten Year Warranty*

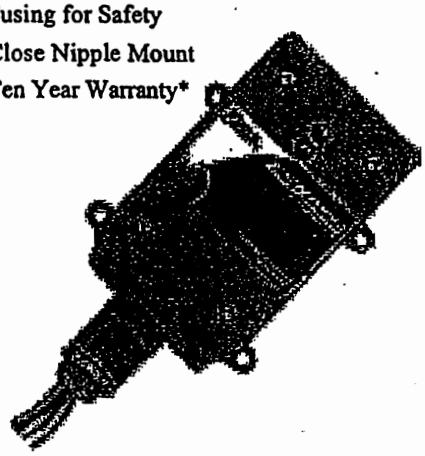

Mechanical Specifications

Enclosure: ..... Durable , lightweight, corrosion resistant high impact plastic
NEMA 1, 2, 3, 3R, 4, 4X, 12, and 13

Dimensions:... 3 phase 5.3" X 5.3" X 2.3"
2 phase 4.5" X 2.9" X 2.5"
1 phase 4.5" X 2.9" X 2.5"

Weight: ..... 3 phase 3.6 lb.
2 phase 2.0 lb.
1 phase 1.9 lb.

Connection: ... #12 AWG solid (approx. 18")

Mounting: ..... Surface Mount via 4 x 0.21" diameter holes
Close Nipple via ½" nipple
Flush Mount via Mounting Plate (optional at time of ordering)

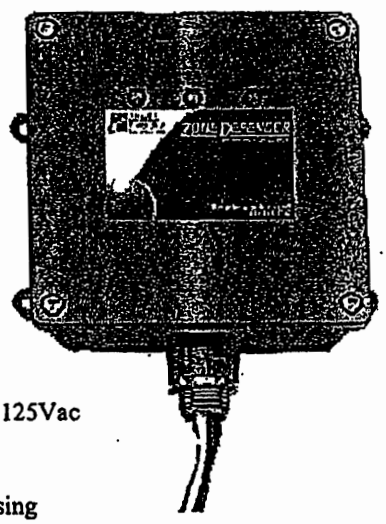

Electrical Specifications

Maximum Surge current Capacity per Phase:		70,000A (8/20µs)
Maximum Surge Capacity:	L-N	35,000A (8/20µs)
	L-L	35,000A (8/20µs)
	L-G	35,000A (8/20µs)
	N-G	18,000A (8/20µs)
Duty Cycle Performance:	70,000A 8/20µs	1 impulse
	10,000A 8/20µs	>2500 impulses
	100A 8/20µs	infinite
Remote Indication:		Normally Closed Rated 2A, 125Vac
Status Indication:	Protection Present:	Green LED ON
	Internal Failure:	Green LED OFF
Safety Fusing		Thermal & Short Circuit Fusing

Part#	Service Voltage	UL 1449	500A 8/20µs	Cat B3 3000A 8/20µs	CAT C3: 10kA	200A Ring	MCOV
*14100	120V 1Ø 2 Wire	400V	310V	435V	730V	315V	140VAC
*14101	120/240V Split Ø 3 Wire	400V	310V	435V	730V	315V	140VAC
*14102	120/208V 3Ø 4 Wire WYE	400V	310V	435V	730V	315V	140VAC
*14104	277/480V 3Ø 4 Wire WYE	700V	690V	890V	1200V	690V	320VAC
*14106	480V 3Ø 4 Wire Delta	1500V	1480V	1600V	2100V	1430V	550VAC
14107	220/380V 3Ø 4 Wire WYE	------	600V	790V	1200V	650V	275VAC
*14108	240/415V 3Ø 4 Wire WYE	700V	690V	890V	1200V	650V	320VAC
14109	220V 1Ø 2 Wire	------	600V	790V	1200V	650V	275VAC

Tested per ANSI/IEEE C62.45 and ANSI/IEEE C62.41

4300 Fortune Place Suite A Melbourne, FL 32904 • (800) 544-4737 Fax: (407) 727-0726 • email: sales@atlanticscientific.com

Atlantic Scientific
MTL Surge Technologies

Manufacturers of Transient Voltage Surge Suppression Products
For: AC Power and Data/Signal/Telephone Lines...

13508

PIPELINE TRANSMISSION PROTECTOR

ASC ORDER # 13508

DESCRIPTION: This suppressor protects electronic metering and monitoring equipment from lightning induced transients that are often present on transmission pipelines. The suppressor is a shunt type employing high energy gas discharge tubes as the primary suppression element. An internal fuse is used to signal device failure (for more information see installation instructions). This model is fully encapsulated for safety and to ensure both mechanical and environmental integrity.

SPECIFICATIONS

Circuit Type:	Parallel Gas Tube Shunt
Surge Capacity:	80kA 8/20 impulse
Clamp Voltage:	Peak Residual Voltage (with load) less than 20V Peak Residual Voltage (unloaded) less than 800V
MCOV:	245V peak
Dimensions:	5.3" x 2.9" x 1.7" overall
Enclosure:	High Impact Phenolic
Price:	$160.00

INSTALLATION

The Suppressor can be mounted to a wall or enclosure using the four holes in the backplate or the backplate can be removed and it can be mounted using the close nipple. The suppressor is installed with the BLACK wire connected to the pipeline and GREEN wire connected to the equipment ground.

Atlantic Scientific Corporation: 4300 Fortune Place Suite A W. Melbourne, FL 32904 Phone:(800) 544-4737 Fax: (321) 727-0736 email: sales@atlanticscientific.com

OUR FACILITIES

Universal
RECTIFIERS, INC.

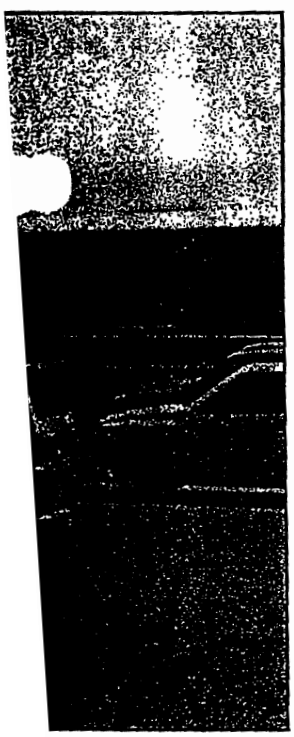

Universal Rectifiers, Inc. is located in Rosenberg, Texas, 30 miles west of Houston. Our plant consists of 17,000 square feet of assembly area, and an additional 2,000 square feet of office and engineering space. Our personnel are experienced, skilled craftsmen, hand picked from the industry. Six of our senior employees have a combined experience of over 80 years and have been instrumental in the production of over 85,000 rectifiers.

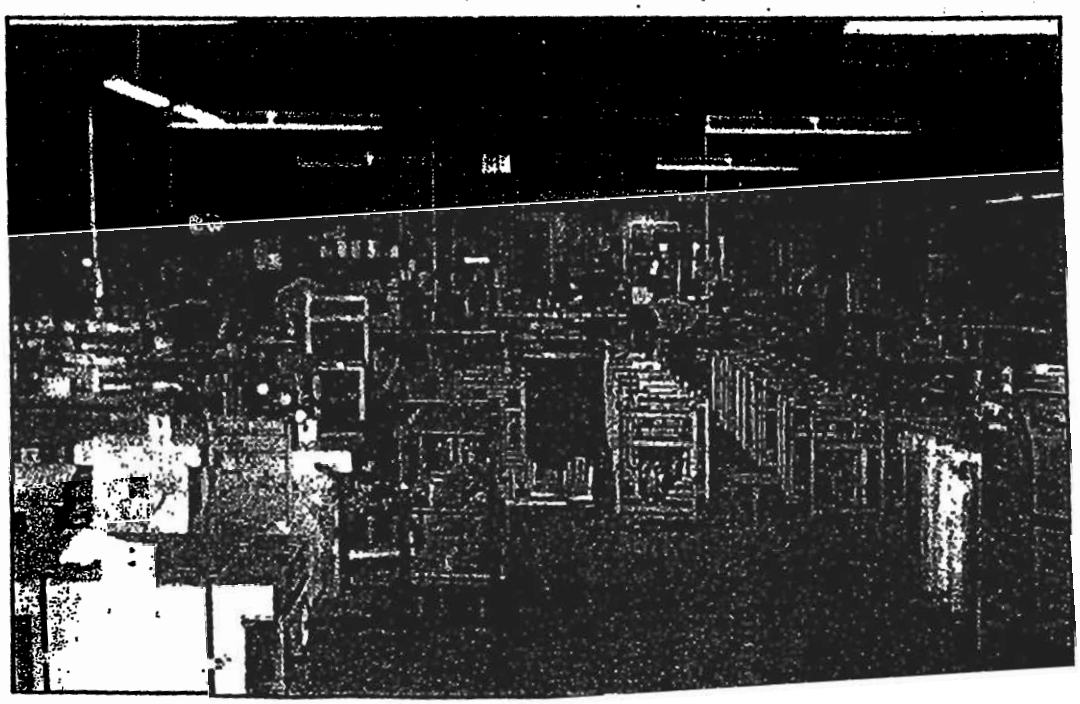

AIR COOLED STANDARD LINE

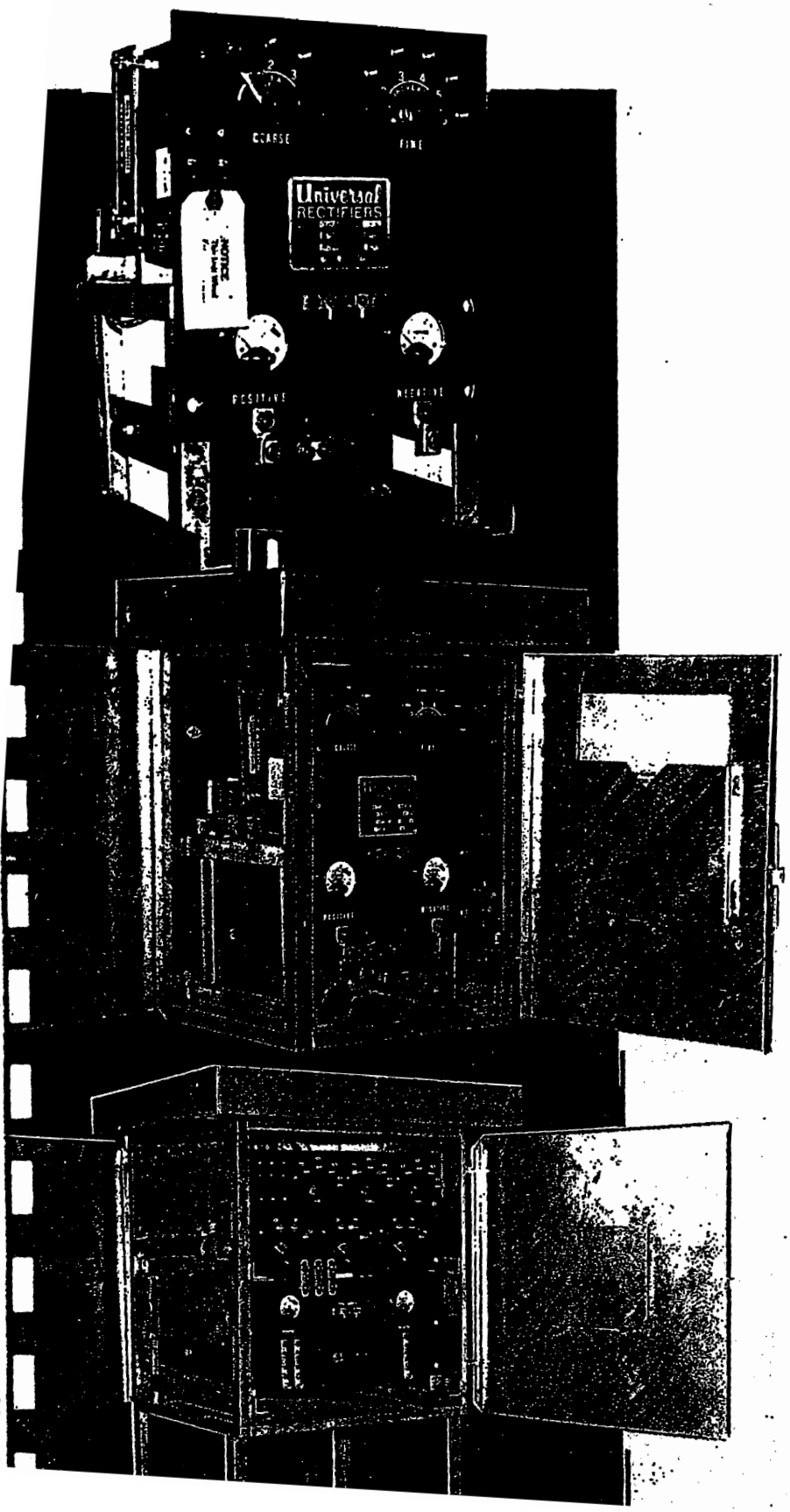

THE "STANDARD" LINE

The Universal Standard Line Cathodic Protection rectifiers are recognized as the leader in quality and workmanship. Many years of field proven service has led to the design of our rectifiers. Conservative ratings, controlled manufacturing techniques, plus many extra features insure long and trouble free operation.

Standard features found in the "Standard Line" Series

- 11 gauge hot dipped galvanized case.
- Front & side opening doors.
- Heavy-duty draw-pull latch.
- Slide out racks
- Heavy duty transformer with 15% over design for reserve capacity.
- 18 step voltage control taps.
- Engraved bakelite panel.
- Quick change heavy duty knobs for changi tap link bars.
- Minimum 5/16" diameter soldered tap changing studs.
- Accessible shunt, plainly marked.
- Heinemann magnetic circuit breaker.
- Hoyt Model 17-3 Meters.
- Tri-amp high density selenium.
- Microsemi avalanche silicon diodes protected by surge suppressors and current limiting fus
- All electrical connections double nutted or soldered.
- Multi-strand high temperature extra flexible w
- Terminal block for AC input wires.
- Primary tap change panel for dual input voltages.
- Dead front panel supplied on all units over 6 volts D.C.

Universal
RECTIFIERS, INC.

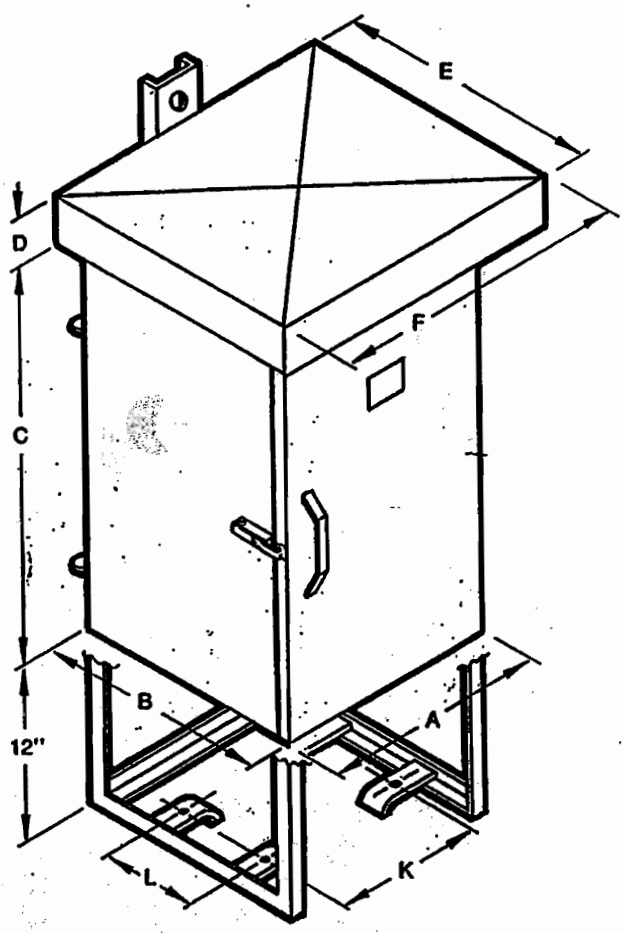

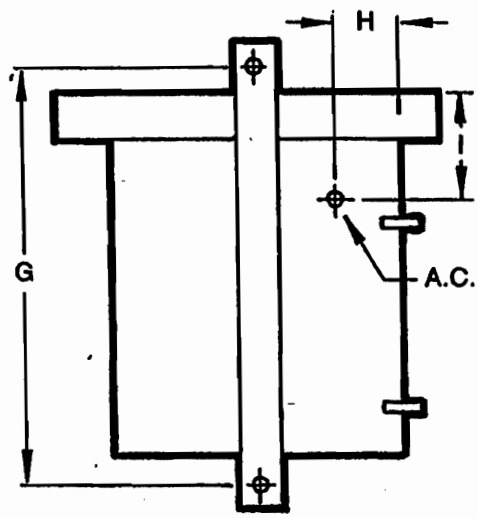

REAR VIEW

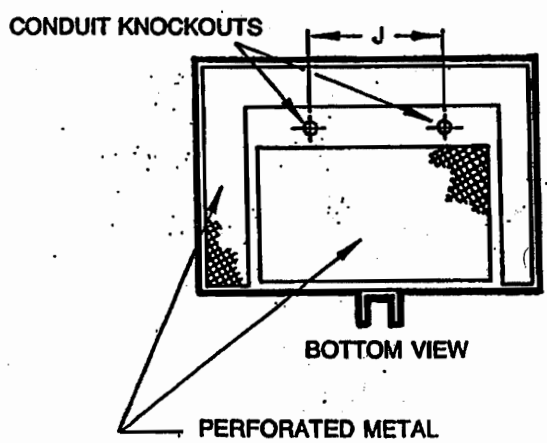

BOTTOM VIEW

CASE SIZE	DIMENSIONS - INCHES											
	A	B	C	D	E	F	G	H	I	J	K	L
A	14	12	20	3	15	20	26¼	3	7½	6	7½	5½
B	17	15	24	3½	18	23	32	3	9	8	10	8½
C	22	21	24	3½	24	28	32	3	9	10	15	14
D	28	22	23	3½	25	34	32	3	9	12	21	15

OIL COOLED

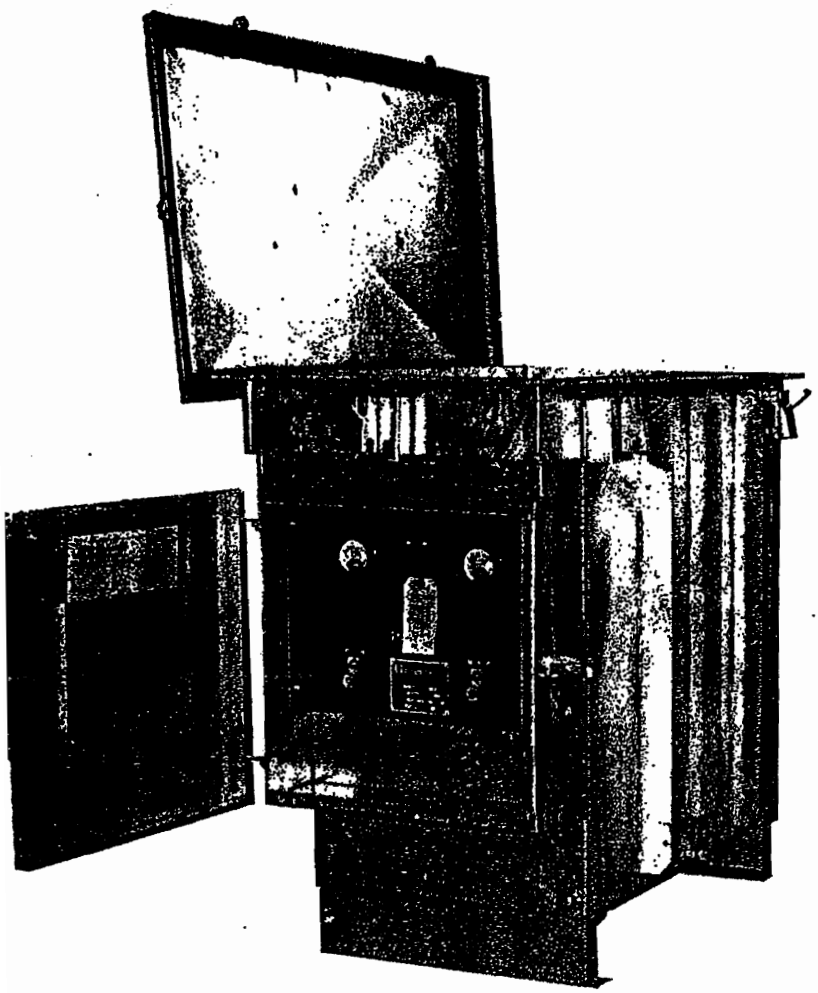

The Universal oil cooled rectifier is a heavy duty rugged rectifier designed to operate under severe conditions. The cabinet is constructed of minimum 11 gauge material reinforced with external fins for added strength and cooling. All units are equipped with hinged lid, lid brace and heavy duty draw pull latches as standard features.

Explosion proof models for Class 1, Group D environments comply to U.L. Standard 698.

REPLACEMENT PARTS

Universal RECTIFIERS, INC.

Universal stocks a complete line of industry standard components for replacement purposes.

- Transformers
- Silicon stacks
- Selenium stacks
- Meters
- Circuit Breakers
- Fuses
- Shunts
- Solid State Relays
- AC & DC arrestors

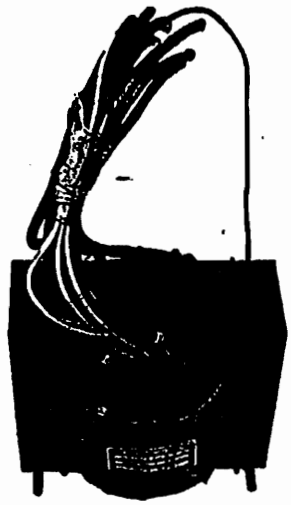

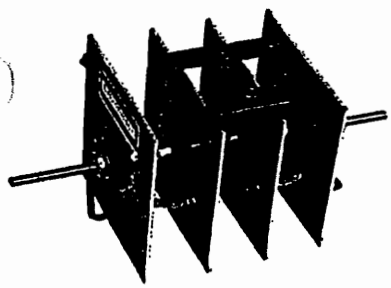

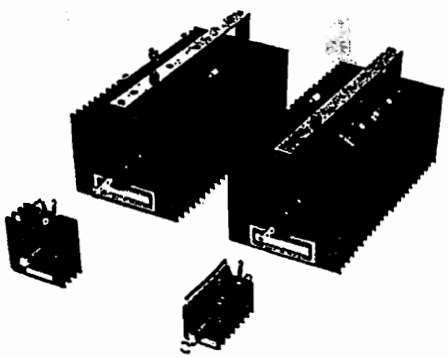

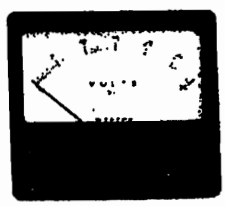

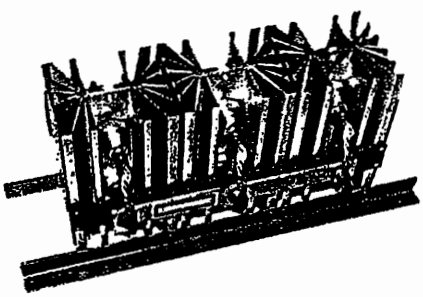

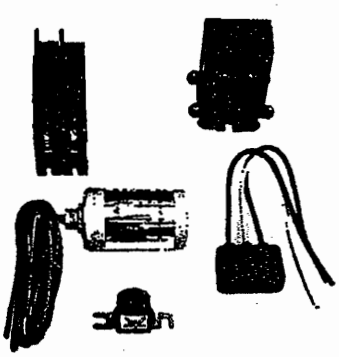

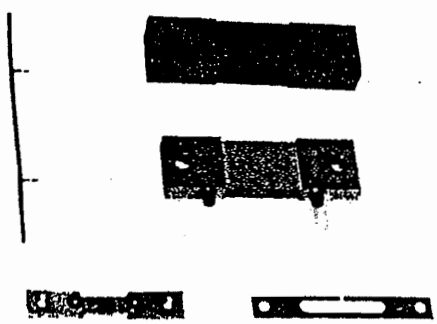

RECTIFIER ORDERING CODE

MODEL

- A = Standard line, Air cooled
- O = Standard line, Oil immersed
- S = Swing Out Series
- U = Utility Series
- G = Gas Station
- E = ES
- P = Proline

TYPE

- S = Standard Rectifier (Manual taps)
- C = Constant Current (Reactor style)
- D = Constant Current (Solid state)
- E = Constant Voltage (Solid state)
- P = Constant Potential (Solid state)
- I = Constant Potential IR Free (Solid state)
- M = Multiple Modes (Solid state)
- V = Variac Control

COOLING

- A = Air Cooled
- O = Oil Immersed
- X = Oil Immersed, Explosion Proof

STACK TYPE

- E = Selenium
- I = Silicon
- C = Selenium, Center Tap
- S = Silicon, Center Tap

DC VOLTS List Max. DC Volts Desired

DC AMPS List Max. DC Amps Desired

AC INPUT

- A = 115/230 1Ø
- B = 230/460 1Ø
- C = 230/460 3Ø
- D = 208 3Ø
- E = 115/480 1Ø
- F = Specify

SPECIAL FEATURES

A	Dual input wired for low voltage
B	Dual input wired for high voltage
C	AC and DC arrestors
D	DC arrestor
E	AC arrestor
F	Filter choke
G	Communications filter
H	Meter switches
I	Base mounting
J	Pilot light
K	DC failure light
M	DC fuse
R	115 VAC convenience outlet
N	Painted cabinet (Galv. std. on most models)
O	Aluminum cabinet
T	Anodized aluminum cabinet
U	Anodized aluminum cabinet with clear coat
P	Other than standard taps
S	Multiple circuits (qty.)
Q	Other, specify

A	S	A	E	20	20	A	BCF	EXAMPLE

Universal
RECTIFIERS, INC.

This chart is useful for calculating A.C. line current. Multiply D.C. volts times the D.C. amperes to obtain the figures across the bottom of the chart and follow a vertical line up until the A.C. voltage and phase selected is intersected. Read across the chart for the A.C. line current.

Example: A 24 volt 100 amp rectifier operating on 230 volts A.C. three phase will draw 8 A.C. Amperes.

For units less than 10,000 D.C. watts, divide all figures by 10.

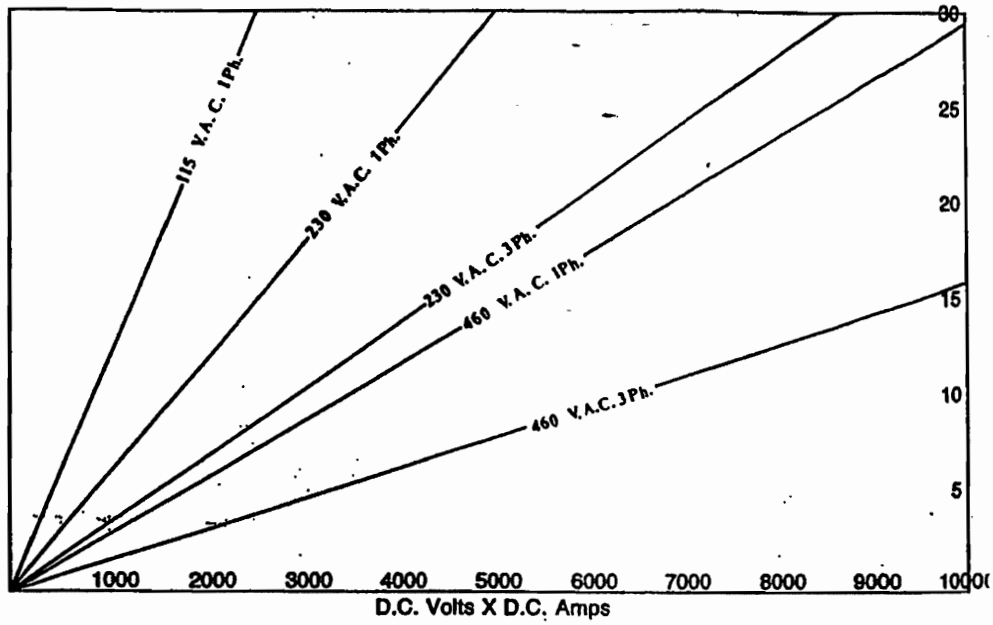

MAXIMUM ALLOWABLE CABINET WATTAGE OIL IMMERSED

CASE SIZE	OIL CAPACITY US GALLONS	DC WATTS SINGLE PHASE	DC WATTS THREE PHASE
PMO	5	200	——
MAO	20	500	——
AO	55	501 to 1900	0 to 3600
BO	110	1901 to 3400	3601 to 6400
CO	165	3401 to 4250	6401 to 8000
DO	213	4251 to 5300	8001 to 10000
EO	300	5301 to 6400	10001 to 12000
FO	465	6401 to 8500	12001 to 16000
GO	600	8501 to 10,600	16001 to 20000

MAXIMUM ALLOWABLE CABINET WATTAGE — AIR COOLED

CASE SIZE	SINGLE PHASE	THREE PHASE
A	1200	——
B	2800	2000
C	6000	6500
D	10000	12000
E	——	18000

AVERAGE SHIPPING WEIGHTS FOR RECTIFIERS BY CABINET SIZE

CASE SIZE	PMO	MAO	AO	BO	CO	DO	EO	FO	GO
SINGLE PHASE	60 lbs.	200	450	594	731	935	1020	1200	1400
THREE PHASE	N/A	N/A	518	660	860	1100	1200	1400	1600

CASE SIZE	A	B	C	D	E
SINGLE PHASE	135 lbs.	185	300	410	505

Universal Rectifiers, Inc. manufactures cathodic protection junction boxes to meet all needs. A full line catalog is available upon request.

STANDARD ENCLOSURES AVAILABLE

- Galvanized steel
- Painted steel
- Stainless steel
- Aluminum
- Anodized Aluminum
- Fiberglass
- Non Metalic

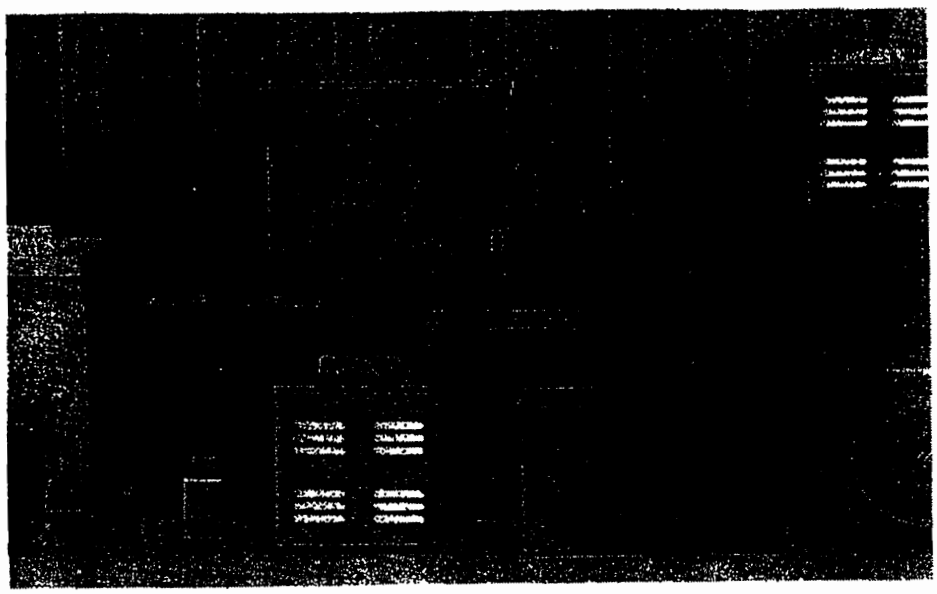

TYPICAL JUNCTION BOX INSTALLATION

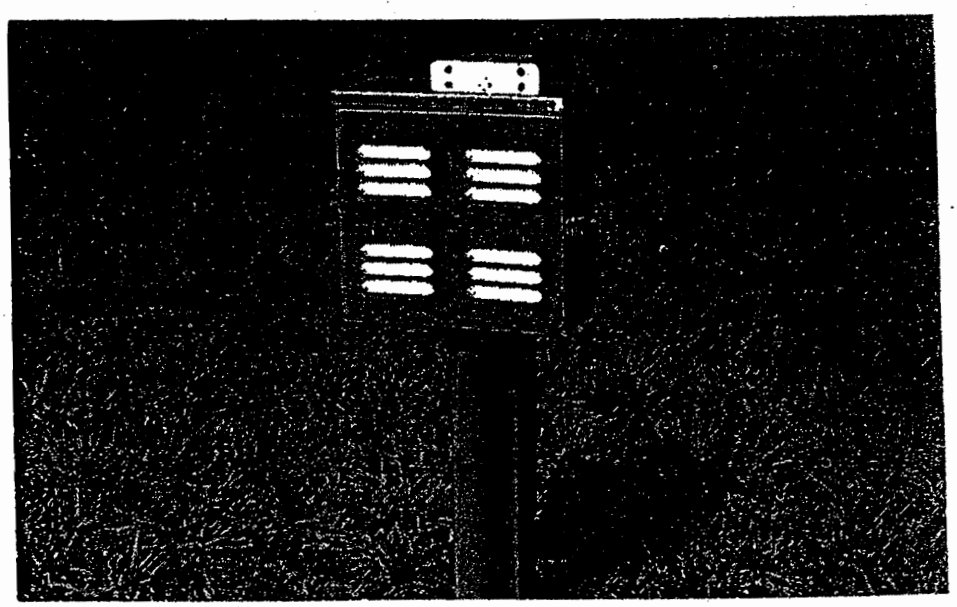

Universal Rectifiers, Inc.
1613 Cottonwood Rd.
P.O. Box 1640
Rosenberg, Texas 77471

ALLIED CORROSION INDUSTRIES INC.

CATHODIC PROTECTION SYSTEM POST INSTALLATION SURVEY

ON

TWO (2) UNDERGROUND STAINLESS STEEL WASTE STORAGE TANKS

AT

MAXEY FLATS DISPOSAL SITE HILLSBORO, KY

PREPARED FOR:

SHAW ENVIRONMENTAL AND INFRASTRUCTURE KNOXVILLE, TN

PREPARED BY:

ALLIED CORROSION INDUSTRIES INC. MARIETTA, GA

CORPORATE HEADQUARTERS:
1550 Cobb Industrial Drive, N.E.
P.O. Box 9098
Marietta, GA 30065-2098
Tel: 770-425-1355
Fax: 770-425-1354

HOUSTON OFFICE:
P.O. Box 41333
Houston, TX 77241-1333
Tel: 713-467-6003
Fax: 713-467-1174

TABLE OF CONTENTS

INTRODUCTION.....2

SYSTEM DESCRIPTION.....2

BASIC THEORY OF CORROSION.....2

A) Dissimilar Metal Corrosion Cells.....3
B) Dissimilar Electrolyte Corrosion Cells.....3
C) Differential Aeration Corrosion Cells.....4
D) New Structure/Old Structure Corrosion Cell.....4

RESULTS AND ANALYSIS.....4

RECOMMENDATIONS.....4

DATA SHEETS.....5

TANK AND JUNCTION BOX DRAWINGS.....6

INTRODUCTION

The Cathodic Protection System for the two (2) buried stainless steel waste storage tanks at the Maxey Flats Disposal site was designed and installed by Allied Corrosion Industries, Inc. The anodes, reference electrodes and structure connections were installed in July 2002, as the flowable fill and native soil backfill were being placed around and over the tanks. The rectifier and junction box installation and the testing were completed during the week of November 2002.

SYSTEM DESCRIPTION

The system consists of five (5) strings or mixed metal oxide anode wires, eight (8) permanent reference electrodes, a junction box and a rectifier. The anode wires, reference cells and all connections to the tanks are terminated in the junction box. The anode (positive) and the structure (negative) cables from the junction box to the rectifier are contained in one armour cable placed on top of the liner. The system was installed per the enclosed tank and junction box drawings. These drawings were also enclosed in the previously submitted Operation Maintenance Manual, which also describes the system in more detail. Prior to discussing the results of the survey, it might be helpful to briefly discuss the Basic Theory of Corrosion.

BASIC THEORY OF CORROSION

Corrosion is basically an electrochemical process in which four conditions must be present:

(1) There must be a positive or anodic area, referred to as the "anode."

(2) There must be a negative or cathodic area, referred to as the "cathode."

(3) There must be a path for ionic current flow, or electrolyte."

(4) There must be a path for electronic current flow, which is normally a "metallic path."

The electrical potential between the anode and cathode causes the corrosion current to flow. The anode is the area that suffers metal loss and corrosion. The amount of metal that will be removed is directly proportional to the amount of current flow. As an example, one ampere of direct current discharging into a soil electrolyte can remove approximately 20 pounds of steel in one year. This rate would vary from metal to metal, and the corrosion current normally encountered is recorded as thousandths of an ampere, or milliamperes.

If one of the four conditions mentioned above can be eliminated the corrosion process and metal loss can be prevented. Cathodic Protection, one of the most common methods of corrosion mitigation, in the pipeline and storage tank industry, mitigates corrosion by eliminating all anodic areas on an underground metallic structure.

Cathodic Protection is usually accomplished through one of two methods: the first method would be to connect a sacrificial metal (with a higher natural electromotive force) through a metallic conductor or wire to the structure intended to be protected. Magnesium is a common sacrificial or galvanic anode. This type of galvanic cathodic protection relies on the natural electrical potential between the two metals to cause the cathodic protection current to flow. Since the driving voltage is limited to the very small potential difference existing between the metals, and the current output is relatively low, this type of cathodic protection is normally associated with very small or very well coated structures.

The second common type of cathodic protection is referred to as impressed current cathodic protection. This type of cathodic protection relies on an external direct current source such as a rectifier or battery. An anode material is placed in the electrolyte, with the structure intended to be protected, and is made more positive than the structure by connecting both to the direct current supply. Any conductive materials can be utilized as an impressed current anode, but since corrosion takes place at the anode, materials with very low consumption rates are most desirable.

The four conditions required for corrosion to occur can involve two separate structures or can be present on one structure. The following are four common types of corrosion cells.

A) Dissimilar Metal Corrosion Cells

This type of corrosion is more commonly referred to as galvanic corrosion. It occurs when two metals of different compositions are metallically contacting each other in a common electrolyte. The magnitude of potential difference between the two metals, and which of the metals has the more negative potential, will determine which metal will be the cathode, which will be the anode, and the rate at which corrosion will occur at the anode.

B) Dissimilar Electrolyte Corrosion Cells

This type of corrosion occurs when a structure passed through an electrolyte of varying properties. Normally, the electrolyte varies in chemical composition or electrical resistivity. When variations of resistivity occur along the same structure, normally the area of the structure in contact with the lower resistive electrolyte will be the anodic area. The natural electrical potential of a metal in an electrolyte can vary significantly with differences in electrolyte compositions. The development of a potential difference, even between two points on the same structure, can provide the criteria necessary for corrosion to occur.

C) Differential Aeration Corrosion Cells

Another important source of corrosion activity on a structure is differential aeration of the electrolyte (commonly soil). In a situation where part of a structure is in soil having a free supply of oxygen (well aerated), and an adjacent area is in oxygen-starved (poorly aerated) soil, the part of the structure in the well-aerated soil will be the cathode and the part of the structure in the poorly aerated soil will be the anode.

D) New Structure/Old Structure Corrosion Cell

This type of corrosion is very similar to dissimilar metal corrosion in that you have an electrical potential between two metals in a common electrolyte. New sections of the same type of metal are commonly used when making repairs or additions to a structure. The unfortunate thing about this type of corrosion is that the newer structure will normally become the anode.

We would like to make it known that there are many other types of corrosion cells, and the corrosion mechanism is far more involved than stated here; but the above is provided as information and reference for structure owners.

RESULTS AND ANALYSIS

All of the tank-to-soil potentials satisfy the 100 mV cathodic polarization criteria, and all tank-to-soil potentials except, the SI (Reference electrodes at the flowable fill-soil interface) on tank #1, satisfy the 850-millivolt criteria The rectifier output could have been increased to satisfy the 850-millivolt criteria at this location; however, all other potentials would have been excessive.

With the impermeable liner over the backfill, it is probable that moisture levels in both the native soil and the flowable fill backfill will decrease with time. This decrease will cause an increase in anode-to-structure resistance. This was anticipated during the system design, and the rectifier has ample reserve voltage capacity to compensative for increased circuit resistance.

On site systems owner personnel were briefed on system operations and recommendation for monthly rectifier monitoring and having an annual survey conducted.

RECOMMENDATIONS

Read and record the rectifier DC volts and amps output on a monthly basis. This should be done by on site owner personnel.

Have an annual survey conducted by a NACE certified corrosion technician. Any adjustments to the individual anode string resistors, or rectifier outputs would be made during the annual survey.

If, at any time the monthly rectifier readings show a 20% or greater decrease in current output since the last annual survey, contact Allied Corrosion Industries, Inc. for instructions on rectifier and/or resistor adjustment.

RECTIFIER DATA

MANUFACTURER:	**Alco/Universal**
MODEL NUMBER:	**ASAI 50-5 AC**
SERIAL NUMBER:	021901
AC RATED INPUT	
VOLTS	**115/230**
AMPS	**3.1/1.5**
DC RATED OUTPUT'	
VOLTS	**50**
AMPS'	**5**
DC SHUNT RATING	**50 Mv 5 amps**

DATE	TAP SETTING	DC VOLTS	DC AMPS	RESISTANCE
11/20/02	C1, F2	6.21	1.71	3.63

JUNCTION BOX DATA

CURRENT OUTPUT OF INDIVIDUAL ANODE STRINGS

ANODE STRING #	CURRENT IN MILLIAMPS	% RESISTOR	DATE
1	390	85	11/20/02
2	380	90	
3	330	0	
4	330	0	
5	300	80	

Tank-to-Soil Potential Measurements with the Permanent Cu/Cuso4 Reference Electrode (All Measurements are in –DC millivolts)

TANK#	REFERENCE CELL #	NATIVE	ON	INSTANT OFF
1	FF1	-537	-1185	-1063
1	FF2	-547	-1138	-1101
1	S1	-454	-950	-804
1	S2	-493	-1306	-972
2	FFF1	-568	-1160	-1054
2	FF2	-520	-1153	-1095
S	1	-429	-1104	-912
S	2	-499	-1163	-959

TANK AND JUNCTION BOX DRAWINGS

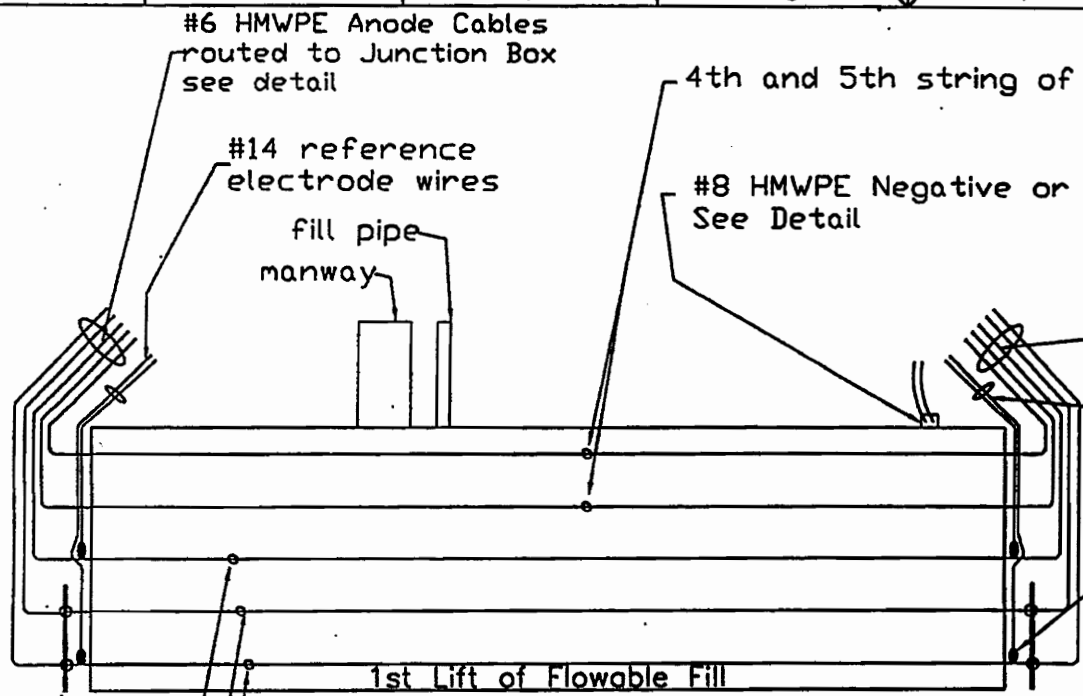
#6 HMWPE Anode Cables
routed to Junction Box
see detail
#14 reference
electrode wires
fill pipe
manway
4th and 5th string of Anode Wire to be placed in Native soil.
#8 HMWPE Negative or Structure Cables attaced to lifting lug.
See Detail
#6 HMWPE Anode Cables
routed to Junction Box
see detail
#14 Reference electrode wires
Permanent Reference
Electrode (10F4)
1st Lift of Flowable Fill
1st string of Anode Wire placed on top of 1st lift of Flowable fill.
1.5mm Elgard Lida Wire spliced to #8 HMWPE Header Cable.
See detail #
2nd string of Anode Wire will be embeded in the 2nd lift of Flowable Fill.
3rd string of Anode Wire will be placed on top of the 2nd lift of Flowable Fill.
#5 x 4' long rebar embeded in first lift of Flowable Fill.
2nd string of Anode wire and cable assembly secured to rebar with cable ties.
All Anode strings except the 2nd string to be secured to the soil or Flowable Fill
with U-shaped soil pins.
ALLIED
CORROSION
INDUSTRIES, INC.

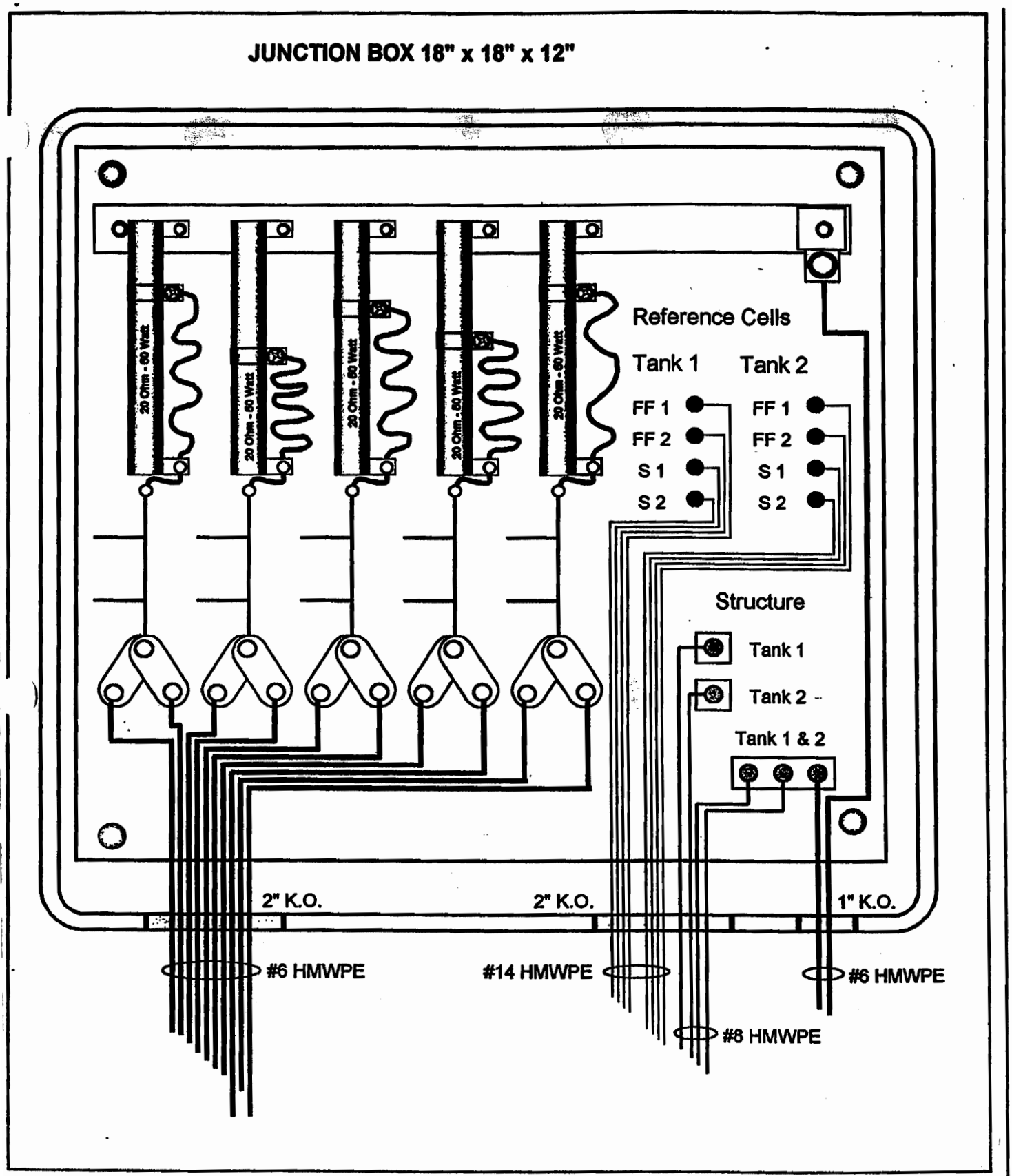

ATE 07/02/02	CHECK BY BWT	Cathodic Protection Circuit Junction Box for Maxey Flats Disposal Site	***ALLIED CORROSION INDUSTRIES, INC.***	
CALE NONE			1550 COBB INDUSTRIAL DRIVE, N.E.	
F N BY BWT	APPROVED BWT		MARIETTA, GEORGIA 30066-6611	
N BY LAM	FILE NO. 2002046		TEL: 770-425-1355 FAX: 770-425-1354	

THIS INFORMATION IS PROPOSED TO MEET REQUIREMENTS BASED UPON DATA FURNISHED BY THE CUSTOMER

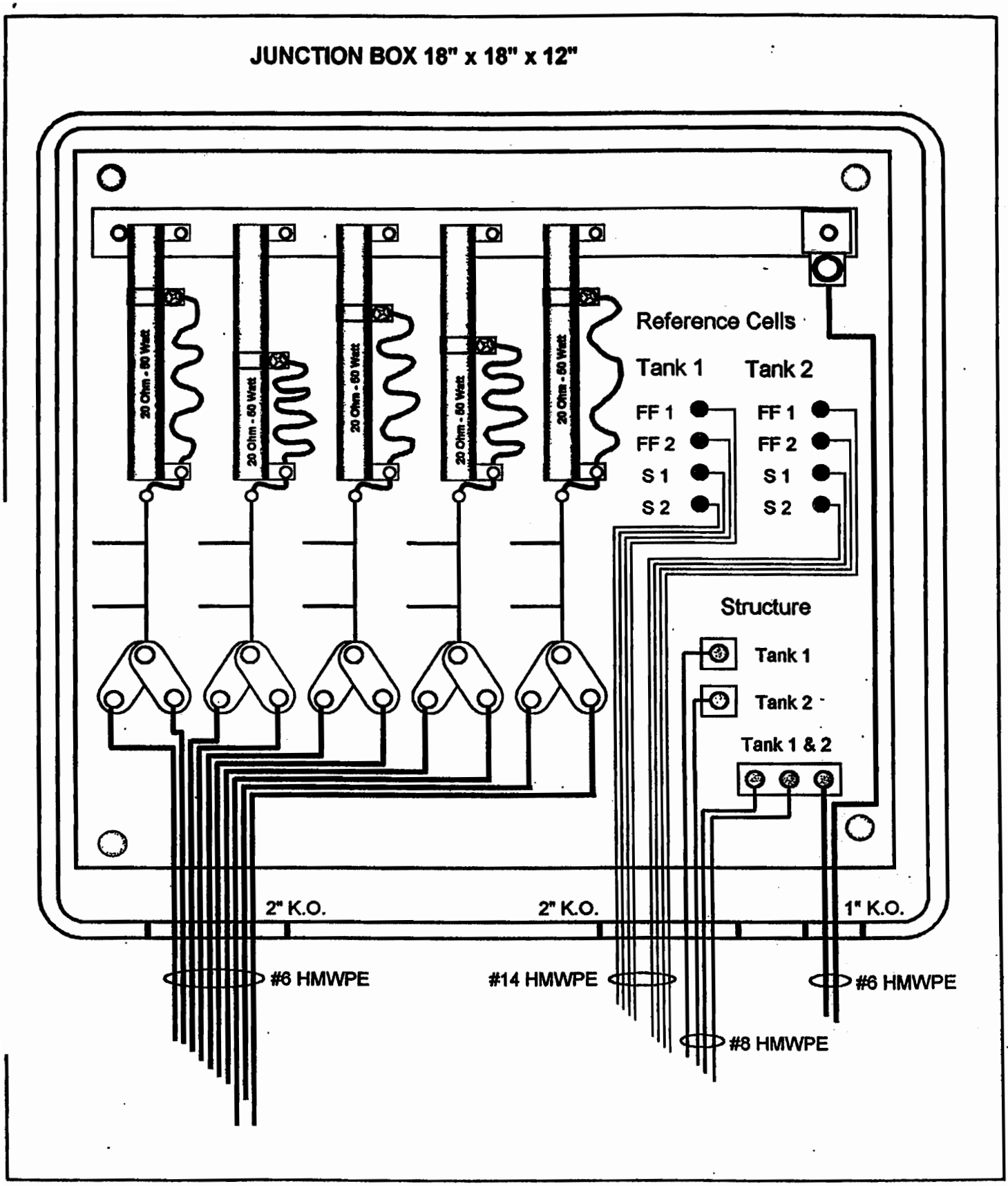

ATE 07/02/02	CHECK BY BWT	Cathodic Protection Circuit Junction Box for Maxey Flats Disposal Site	***ALLIED CORROSION INDUSTRIES, INC.*** 1550 COBB INDUSTRIAL DRIVE, N.E. MARIETTA, GEORGIA 30066-6611 TEL: 770-425-1355 FAX: 770-425-1354
CALE NONE			
ESIGN BY BWT	APPROVED BWT		
RAWN BY LAM	FILE NO. 2002046		

THIS INFORMATION IS PROPOSED TO MEET REQUIREMENTS BASED UPON DATA FURNISHED BY THE CUSTOMER

E-6 – Riser Pipe Manufacturer Data

Contact Information:

Steel Plate Fabricators
3703 Papermill Road
Knoxville, TN 37909
888-522-5177
www.steelplatefab.com

CONCENTRIC TRASH RACK AND ANTI-VORTEX DEVICE DESIGN TABLE

RISER DIAM., IN.	CYLINDER DIAMETER, INCHES	CYLINDER THICKNESS, GAUGE	HEIGHT, INCHES	MINIMUM SUPPORT BAR	MINIMUM TOP THICKNESS	MINIMUM TOP STIFFENER
12	16	16	6	NO. 6 REBAR OR 1.5 X 1.5 X 0.19 ANGLE	16 GA. (FAC)	-
15	21	16	7	NO. 6 REBAR OR 1.5 X 1.5 X 0.19 ANGLE	16 GA. (FAC)	-
18	27	16	8	NO. 6 REBAR OR 1.5 X 1.5 X 0.19 ANGLE	16 GA. (FAC)	-
21	30	16	11	NO. 6 REBAR OR 1.5 X 1.5 X 0.19 ANGLE	16 GA. (C) 14 GA. (F)	-
24	34	16	13	NO. 6 REBAR OR 1.5 X 1.5 X 0.19 ANGLE	16 GA. (C) 14 GA. (F)	-
27	42	16	15	NO. 6 REBAR OR 1.5 X 1.5 X 0.19 ANGLE	16 GA. (C) 14 GA. (F)	-
30	54	16	17	NO.8 REBAR	14 GA. (C) 12 GA. (F)	-
42	60	16	19	NO.8 REBAR	14 GA. (C) 12 GA. (F)	-
48	72	16	21	1.25" PIPE OR 1.25 X 1.25 X 0.25 ANGLE	14 GA.(C) 10 GA.(F)	-
54	78	16	23	1.25" PIPE OR 1.25 X 1.25 X 0.25 ANGLE	14 GA.(C) 10 GA.(F)	-
60	90	14	29	1.5" PIPE OR 1.5 X 1.5 X 0.25 ANGLE	12 GA. (C) 8 GA. (F)	-
66	96	14	33	2" PIPE OR 2 X 2 X 0.19 ANGLE	12 GA.(C) 8 GA.(F) W/STIFFENER	2 X 2 X 0.25 ANGLE
72	102	14	36	2" PIPE OR 2 X 2 X 0.19 ANGLE	12 GA.(C) 8 GA.(F) W/STIFFENER	2.5 X 2.5 X 0.25 ANGLE
78	114	14	39	2.5" PIPE OR 2 X 2 X 0.25 ANGLE	12 GA.(C) 8 GA.(F) W/STIFFENER	2.5 X 2.5 X 0.25 ANGLE
84	120	12	42	2.5" PIPE OR 2.5 X 2.5 X 0.25 ANGLE	12 GA.(C) 8 GA.(F) W/STIFFENER	2.5 X 2.5 X 0.31 ANGLE

NOTE : THE CRITERION FOR SIZING THE CYLINDER IS THAT THE AREA BETWEEN THE INSIDE OF THE CYLINDER AND THE OUTSIDE OF THE RISER IS EQUAL TO OR GREATER THAN THE AREA INSIDE THE RISER. THEREFORE, THE ABOVE TABLE IS INVALID FOR USE WITH CONCRETE PIPE RISERS.

NOTE : CORRUGATION FOR 12" THRU 36" PIPE MEASURE 2.67" X 0.5"; FOR 42" THRU 84" THE CORRUGATION MEASURES 5" X 1" OR 6" X 1".

NOTE : C = CORRUGATED; F = FLAT.

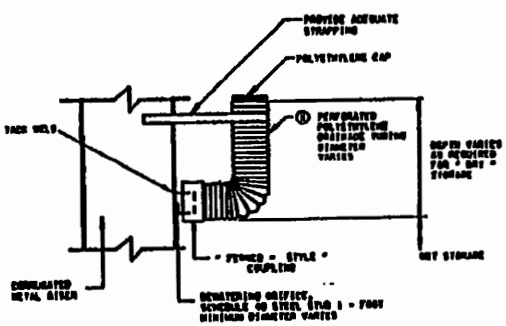

NOTE : WITH CONCRETE RISER, USE PVC SCHEDULE 40 STUB FOR DEWATERING ORIFICE

(1) DRAINAGE TUBING SHALL COMPLY WITH ASTM F667 AND AASHTO M294

DEWATERING SYSTEM DETAIL FOR SEDIMENT BASINS

ANTI - VORTEX DEVICE DETAIL

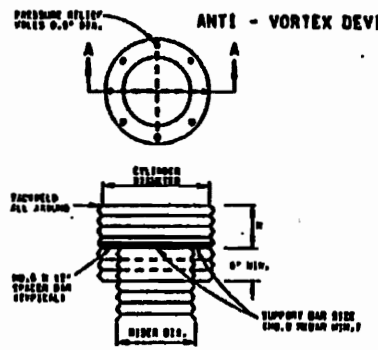

SECTION A - A

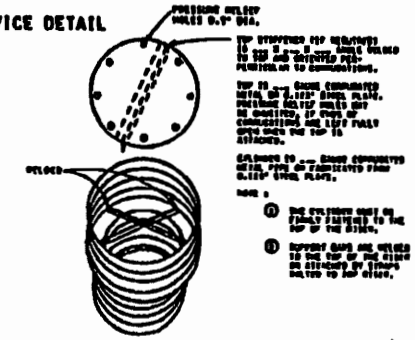

ISOMETRIC

NOTE :

(A) THE CYLINDER MUST BE FIRMLY FASTENED TO THE TOP OF THE RISER.

(B) SUPPORT BARS ARE WELDED TO THE TOP OF THE RISER OR ATTACHED BY STRONG BOLTS TO TOP RISER.

ANTI - SEEP COLLAR DIAPHRAGM DIMENSION TABLE

DIA (IN)	GAUGE	MINIMUM DIAPHRAGM SIZE (IN)	FABRICATION DIM. FOR DIAPHRAGM (IN) WIDTH	LENGTH
6	[illegible]	[illegible]	[illegible]	[illegible]
8	[illegible]	[illegible]	[illegible]	[illegible]
10	[illegible]	[illegible]	[illegible]	[illegible]
12	[illegible]	[illegible]	[illegible]	[illegible]
15	[illegible]	[illegible]	[illegible]	[illegible]
18	[illegible]	[illegible]	[illegible]	[illegible]
21	[illegible]	[illegible]	[illegible]	[illegible]
24	[illegible]	[illegible]	[illegible]	[illegible]
27	[illegible]	[illegible]	[illegible]	[illegible]
30	[illegible]	[illegible]	[illegible]	[illegible]
36	[illegible]	[illegible]	[illegible]	[illegible]
42	[illegible]	[illegible]	[illegible]	[illegible]
48	[illegible]	[illegible]	[illegible]	[illegible]
54	[illegible]	[illegible]	[illegible]	[illegible]
60	[illegible]	[illegible]	[illegible]	[illegible]
66	[illegible]	[illegible]	[illegible]	[illegible]
72	[illegible]	[illegible]	[illegible]	[illegible]
78	[illegible]	[illegible]	[illegible]	[illegible]
84	[illegible]	[illegible]	[illegible]	[illegible]

ANTI-SEEP COLLAR DETAIL ASSEMBLY NOTES

(A) UNASSEMBLED DIAPHRAGMS SHALL BE MARKED OR PAINTED OR TAGGED WHEN NECESSARY TO IDENTIFY MATCHING PARTS TO SECURE A PROPER INSTALLATION.

(B) THE GAP BETWEEN THE PIPE WALL SECTIONS AND BETWEEN THE PIPE AND COUPLING BAND SHALL BE SEALED WITH BITUMINOUS MASTIC AT TIME OF INSTALLATION. MEASURED BASED 0.375" OR 9" MINIMUM WIDTH MAY BE USED IN LIEU OF MASTIC.

(C) ALL WELDS AND ALL PAINT AFFECTED AREAS ON ZINC COATED METAL SHALL BE THOROUGHLY CLEANED AND TREATED IN ACCORDANCE WITH SPECIFICATIONS (SEDIM. GALV).

(D) EACH DIAPHRAGM SHALL BE FURNISHED WITH TWO RODS AND NUTS AND TWO STANDARD TANK LUGS OR "L" LUGS FOR SECURING DIAPHRAGMS TO PIPE.

(E) RODS FOR COLLAR COUPLING BANDS AND DIAPHRAGMS FOR 6" THRU 15" DIAMETER PIPE SHALL BE 0.375" DIAMETER AND FOR PIPE LARGER THAN 15" DIAMETER THE RODS SHALL BE 0.5" DIAMETER.

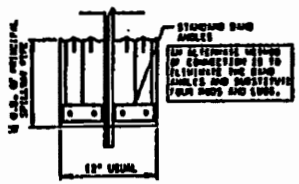

SIDE VIEW OF ANTI - SEEP COLLAR

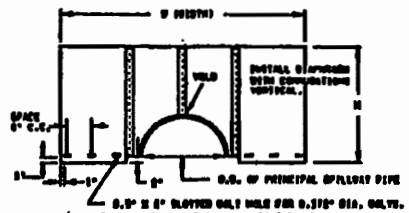

PLAN VIEW OF ANTI - SEEP COLLAR

NOTE : UPPER ONE HALF DIAPHRAGM SHOWN, OTHER HALF SAME EXCEPT SLOTS ARE VERTICAL

ANTI - SEEP COLLAR DETAIL

ANTI-SEEP COLLAR GENERAL NOTES

1. THE ANTI-SEEP COLLAR IS TO BE USED ON THE BARREL OF THE PRINCIPAL SPILLWAY TO REDUCE SEEPAGE LOSS AND PIPING FAILURE.
2. USE IF PIPE IS LARGER THAN 10 INCHES IN DIAMETER.
3. USE A MINIMUM OF ONE ANTI-SEEP COLLAR, IF THE DAM IS 10 FEET OR LESS IN HEIGHT AND A MINIMUM OF TWO ANTI-SEEP COLLARS, IF THE DAM IS GREATER THAN 10 FEET IN HEIGHT.
4. USE MAXIMUM SPACING BETWEEN COLLARS OF FOURTEEN TIMES THE PROJECTION OF THE COLLAR ABOVE THE PIPE. FROM THE DETAILS - THE COLLAR SPACING WOULD BE ONE - HALF THE DIAMETER OF THE PRINCIPAL SPILLWAY PIPE TIMES FOURTEEN.
5. COLLARS SHOULD NOT BE CLOSER THAN 2 FEET TO A PIPE JOINT.
6. PRECAUTIONS SHOULD BE TAKEN TO ENSURE GOOD COMPACTION IS ACHIEVED AROUND THE COLLAR.

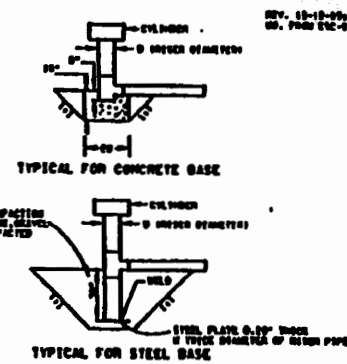

TYPICAL FOR CONCRETE BASE

TYPICAL FOR STEEL BASE

TYPICAL ANTI-FLOTATION BLOCK DETAILS FOR RISERS TEN FEET OR LESS IN HEIGHT

NOTE :

THE BASE OF THE PRINCIPAL SPILLWAY MUST BE FIRMLY ANCHORED TO PREVENT FULL FLOTATION. IF THE RISER OF THE SPILLWAY IS GREATER THAN 10 FEET IN HEIGHT, COMPUTATIONS MUST BE MADE TO DETERMINE THE ANCHORING REQUIREMENTS. A MINIMUM FACTOR OF 1.25 SHALL BE USED (DOWNWARD FORCES = 1.25 X UPWARD FORCES).

SEDIMENT BASIN GENERAL NOTES

(A) THE DRAINAGE AREA FOR A SEDIMENT BASIN SHALL NOT EXCEED 20 ACRES. BASINS SERVING FOR DRAINAGE AREAS LARGER THAN 20 ACRES NEED CARE OF CARE SECTION.

(B) THE SEDIMENT BASIN VOLUME SHALL BE BASED UPON A SEDIMENT LOADING RATE OF 134 CUBIC YARD PER ACRE.

(C) THE SEDIMENT SHALL BE REMOVED AND THE SEDIMENT BASIN RESTORED TO ITS ORIGINAL DIMENSIONS WHEN THE SEDIMENT HAS ACCUMULATED TO 1/2 THE DESIGN VOLUME OF THE BASIN.

(D) THE OPEN CROSS-SECTIONAL AREA SHALL BE A DETERMINED BY THE DESIGN INFLOW CURVES SHOWN IN THE EROSION AND SEDIMENT CONTROL MANUAL.

(E) THE BASIN CAPACITY SHALL BE BASED UPON BASINS THE 100 YEARS WHEN A SPILLWAY IS USED OR TWENTY - FIVE (25) YEARS WHEN A SPILLWAY IS NOT USED. IF THE PERMANENT SPILLWAY IS USED IT SHALL BE DESIGNED FOR A TWENTY-FIVE (25) YEAR FLOW.

(F) SEDIMENT BASINS MAY REMAIN IN PLACE AS PERMANENT BASINS, AS INDICATED ON THE PLANS OR AS DIRECTED BY THE ENGINEER. THE HYDRAULIC CALCULATIONS FOR PERMANENT BASINS SHALL BE APPROVED BY THE STRUCTURE DEPARTMENT OF TRANSPORTATION, STRUCTURES DIVISION, HYDRAULIC AND PERMITS SECTION.

(G) SEDIMENT BASIN VOLUME IS MEASURED FROM THE CREST OF THE SPILLWAY TO THE BOTTOM OF THE BASIN.

(H) BAND THAT CAN STORE AT LEAST 10 ACRE-FEET OF RUNOFF OR ARE TWENTY (20) FEET OR MORE IN HEIGHT MUST MEET REQUIREMENTS ESTABLISHED BY THE TENNESSEE DAM SAFETY ACT.

(I) BAFFLES SHALL BE 4 FEET X 8 FEET X 3/4 INCH EXTERIOR PLYWOOD, TYPE "PLYFORM" GRADE B2, C AND B3.

(J) PAYMENT FOR DETAILS SHOWN ON THIS SHEET SHALL BE PAID FOR UNDER THE PAYSCALE BID FOR ITEM NOS. 209-11.01 THRU 209-11.06, SEDIMENT BASIN RISER [illegible] FOR EACH.

(K) THE PIPE USED IN THE CONSTRUCTION OF THE PRINCIPAL SPILLWAY BARREL SHALL BE PAID FOR IN ACCORDANCE WITH STANDARD SPECIFICATIONS, SECTION 609, PIPE CULVERT AND STORM SEWERS.

(L) SEE STANDARD DRAWING NOS. EC-STR-13 AND EC-STR-17 FOR ADDITIONAL DETAILS AND GENERAL NOTES NOT SHOWN ON THIS DRAWING.

STATE OF TENNESSEE
DEPARTMENT OF TRANSPORTATION

SEDIMENT BASINS RISER AND COLLAR APPURTENANCES

10-26-99 | EC-STR-16

Grinnell:
Pipe Fitters
Handbook

COMMERCIAL PIPE SIZES AND WALL THICKNESSES

The following table lists the pipe sizes and wall thicknesses currently established as standard, or specifically:

1. The traditional standard weight, extra strong, and double extra strong pipe.
2. The pipe wall thickness schedules listed in American Standard B36.10, which are applicable to carbon steel.
3. The pipe wall thickness schedules listed in American Standard B36.19, and ASTM Specification A409, which are applicable only to corrosion resistant materials. (NOTE: Schedule 10S is also available in carbon steel in sizes 12" and smaller.)

ASA-B36.10 and B36.19

NOMINAL PIPE SIZE	OUT-SIDE DIAM.	NOMINAL WALL THICKNESS FOR																	
		SCHED. 5S*	SCHED. 10S*	SCHED. 10	SCHED. 20	SCHED. 30	STANDARD†	SCHED. 40	SCHED. 60	EXTRA STRONG‡	SCHED. 80	SCHED. 100	SCHED. 120	SCHED. 140	SCHED. 160	XX STRONG
1/8	0.405	—	0.049	—	—	—	*0.068*	0.068	—	*0.095*	0.095	—	—	—	—	—
1/4	0.540	—	0.065	—	—	—	*0.088*	0.088	—	*0.119*	0.119	—	—	—	—	—
3/8	0.675	—	0.065	—	—	—	*0.091*	0.091	—	*0.126*	0.126	—	—	—	—	—
1/2	0.840	0.065	0.083	—	—	—	*0.109*	0.109	—	*0.147*	0.147	—	—	—	0.188	0.294
3/4	1.050	0.065	0.083	—	—	—	*0.113*	0.113	—	*0.154*	0.154	—	—	—	0.219	0.308
1	1.315	0.065	0.109	—	—	—	*0.133*	0.133	—	*0.179*	0.179	—	—	—	0.250	0.358
1 1/4	1.660	0.065	0.109	—	—	—	*0.140*	0.140	—	*0.191*	0.191	—	—	—	0.250	0.382
1 1/2	1.900	0.065	0.109	—	—	—	*0.145*	0.145	—	*0.200*	0.200	—	—	—	0.281	0.400
2	2.375	0.065	0.109	—	—	—	*0.154*	0.154	—	*0.218*	0.218	—	—	—	0.344	0.436
2 1/2	2.875	0.083	0.120	—	—	—	*0.203*	0.203	—	*0.276*	0.276	—	—	—	0.375	0.552
3	3.500	0.083	0.120	—	—	—	*0.216*	0.216	—	*0.300*	0.300	—	—	—	0.438	0.600
3 1/2	4.000	0.083	0.120	—	—	—	*0.226*	0.226	—	*0.318*	0.318	—	—	—	—	—
4	4.500	0.083	0.120	—	—	—	*0.237*	0.237	—	*0.337*	0.337	—	0.438	—	0.531	0.674
5	5.563	0.109	0.134	—	—	—	*0.258*	0.258	—	*0.375*	0.375	—	0.500	—	0.625	0.750
6	6.625	0.109	0.134	—	—	—	*0.280*	0.280	—	*0.432*	0.432	—	0.562	—	0.719	0.864
8	8.625	0.109	0.148	—	0.250	0.277	*0.322*	0.322	0.406	*0.500*	0.500	0.594	0.719	0.812	0.906	0.875
10	10.750	0.134	0.165	—	0.250	0.307	*0.365*	0.365	0.500	*0.500*	0.594	0.719	0.844	1.000	1.125	1.000
12	12.750	0.156	0.180	—	0.250	0.330	*0.375*	0.406	0.562	*0.500*	0.688	0.844	1.000	1.125	1.312	1.000
14 O.D.	14.000	0.156	0.250	0.250	0.312	0.375	0.375	0.438	0.594	0.500	0.750	0.938	1.094	1.250	1.406	—
16 O.D.	16.000	0.165	0.250	0.250	0.312	0.375	0.375	0.500	0.656	0.500	0.844	1.031	1.219	1.438	1.594	—
18 O.D.	18.000	0.165	0.250	0.250	0.312	0.438	0.375	0.562	0.750	0.500	0.938	1.156	1.375	1.562	1.781	—
20 O.D.	20.000	0.188	0.250	0.250	0.375	0.500	0.375	0.594	0.812	0.500	1.031	1.281	1.500	1.750	1.969	—
22 O.D.	22.000	0.188	0.250	0.250	0.375	0.500	0.375	—	0.875	0.500	1.125	1.375	1.625	1.875	2.125	—
24 O.D.	24.000	0.218	0.250	0.250	0.375	0.562	0.375	0.688	0.969	0.500	1.218	1.531	1.812	2.062	2.344	—
26 O.D.	26.000	—	—	0.312	0.500	—	0.375	—	—	0.500	—	—	—	—	—	—
28 O.D.	28.000	—	—	0.312	0.500	0.625	0.375	—	—	0.500	—	—	—	—	—	—
30 O.D.	30.000	0.250	0.312	0.312	0.500	0.625	0.375	—	—	0.500	—	—	—	—	—	—
32 O.D.	32.000	—	—	0.312	0.500	0.625	0.375	0.688	—	0.500	—	—	—	—	—	—
34 O.D.	34.000	—	—	0.312	0.500	0.625	0.375	0.688	—	0.500	—	—	—	—	—	—
36 O.D.	42.000	—	—	0.312	0.500	0.625	0.375	0.750	—	0.500	—	—	—	—	—	—
42 O.D.	42.000	—	—	—	0.375	—	—	—	—	0.500	—	—	—	—	—	—

All dimensions are given in inches.

The decimal thicknesses listed for the respective pipe sizes represent their nominal or average wall dimensions. The actual thicknesses may be as much as 12.5% under the nominal thickness because of mill tolerance. Thicknesses shown in light face for Schedule 60 and heavier pipe are not currently supplied by the mills, unless a certain minimum tonnage is ordered.

*Schedules 5S and 10S are available in corrosion resistant materials and Schedule 10S is also available in carbon steel.

†Thicknesses shown in italics are available also in stainless steel, under the designation Schedule 40S.

‡Thicknesses shown in italics are available also in stainless steel, under the designation Schedule 80S.

Sheet 5 of 8

Sheet 4 of 8

USS Standard and Line Pipe Data
Seamless, Electric Weld, Plain End (Cont'd)

Size, Inches Nominal Size	Size, Inches OD	Wall Thickness, Inches	Weight Lbs./Ft. Plain End	Class	Schedule No.	Mill Test Pressure, psi Grade A	Mill Test Pressure, psi Grade B	Actual OD, Inches
24	24.000	0.250*	63.41			470	560	24
		0.281	71.18			530	630	
		0.312	78.93			580	680	
		0.344	86.91			640	750	
		0.375	94.62	Std.	20	700	820	
		0.406	102.31			760	890	
		0.438	110.22			820	960	
		0.469	117.86			880	1030	
		0.500	125.49	XS		940	1090	
		0.562	140.68		30	1050	1230	
		0.625	156.03			1170	1370	
		0.688	171.29		40	1290	1500	
		0.750	186.23			1410	1640	
		0.812	201.09			1520	1780	
		0.875	216.10			1640	1910	
		0.938	231.03			1760	2050	
		0.969	238.35		60	1820	2120	
		1.219	296.58		80	2280	2660	
		1.312	317.91			2340	2340	
26	26.000	0.250*	68.75			430	500	26
		0.281*	77.18			490	570	
		0.312	85.60			540	630	
		0.344	94.26			600	690	
		0.375	102.63	Std.		650	760	
		0.406	110.98			700	820	
		0.438	119.57			760	880	
		0.469	127.88			810	950	
		0.500	136.17	XS	20	870	1010	
		0.562	152.68			970	1130	
		0.625	169.38			1080	1260	
		0.656	177.56			1140	1320	
		0.688	185.99			1190	1390	
		0.750	202.25			1300	1510	
		0.875	234.79			1510	1770	
		1.188	314.81			2000	2000	
30	30.000	0.250	79.43			380	440	30
		0.281	89.19			420	490	
		0.312	98.93			470	550	
		0.344	108.95			520	600	
		0.375	118.65			560	660	
		0.406	128.32			610	710	
		0.438	138.29			660	770	
		0.469	147.92			700	820	
		0.500	157.53			750	880	
		0.562	176.69			840	980	
		0.625	196.08			940	1090	
		0.656	205.59			980	1150	
		0.688	215.38			1030	1200	
		0.750	234.29			1130	1310	
		0.812	253.12			1220	1420	
		0.875	272.17			1310	1530	

NOTE: Some OD's, walls and grades are listed for information only and are not necessarily regular production items.
Some OD's, walls and grades are non-API.
*Not available in seamless.

Size, Inches Nominal Size	Size, Inches OD	Wall Thickness, Inches	Weight Lbs./Ft. Plain End	Mill Test Pressure, psi Grade A	Mill Test Pressure, psi Grade B	Actual OD, Inches
36	36.000	0.250	95.45	310	360	36
		0.281	107.20	350	410	
		0.312	118.92	390	450	
		0.344	131.00	430	500	
		0.375	142.68	470	550	
		0.406	154.34	510	590	
		0.438	166.35	550	640	
		0.469	177.97	590	680	
		0.500	189.57	630	730	
		0.562	212.70	700	820	
		0.625	236.13	780	910	
		0.656	247.62	820	960	
		0.688	259.47	860	1000	
		0.750	282.35	940	1090	
		0.812	305.16	1020	1180	
		0.875	328.24	1090	1280	
		0.938	351.25	1170	1370	
		1.000	373.80	1250	1460	

Size, Inches Nominal Size	Size, Inches OD	Wall Thickness, Inches	Weight Lbs./Ft. Plain End	Mill Test Pressure, psi Grade A	Mill Test Pressure, psi Grade B	Actual OD, Inches
40	40.000	0.312	132.25	350	410	40
		0.344	145.69	390	450	
		0.375	158.70	420	490	
		0.406	171.68	460	530	
		0.438	185.06	490	570	
		0.469	198.01	530	620	
		0.500	210.93	560	660	
		0.562	236.71	630	740	
		0.625	262.83	700	820	
		0.688	288.86	770	900	
		0.750	314.39	840	980	
		0.812	339.84	910	1070	
		0.875	365.62	980	1150	
		0.938	391.32	1060	1230	
		1.000	416.52	1120	1310	
42	42.000	0.312	138.91	330	390	42
		0.344	153.04	370	430	
		0.375	166.71	400	470	
		0.406	180.35	430	510	
		0.438	194.42	470	550	
		0.469	208.03	500	590	
		0.500	221.61	540	630	
		0.562	248.72	600	700	
		0.625	276.18	670	780	
		0.688	303.55	740	860	
		0.750	330.41	800	940	
		0.812	357.19	870	1020	
		0.875	384.31	940	1090	
		0.938	411.35	1000	1170	
		1.000	437.88	1070	1250	
44	44.000	0.344	160.39	280	330	44
		0.375	174.72	310	360	
		0.406	189.03	330	390	
		0.438	203.78	360	420	
		0.469	218.04	380	450	
		0.500	232.29	410	480	
		0.562	260.72	460	540	
		0.625	289.53	510	600	
		0.688	318.25	560	660	
		0.750	346.43	610	720	
		0.812	374.53	830	970	
		0.875	403.00	890	1040	
		0.938	431.39	960	1120	
		1.000	459.24	1020	1190	
46	46.000	0.344	167.74	270	310	46
		0.375	182.73	290	340	
		0.406	197.70	320	370	
		0.438	213.13	340	400	
		0.469	228.06	370	430	
		0.500	242.97	390	460	
		0.562	272.73	440	510	
		0.625	302.88	490	570	
		0.688	332.95	540	630	
		0.750	362.45	590	680	
		0.812	391.88	640	740	
		0.875	421.69	680	800	
		0.938	451.42	730	860	
		1.000	480.60	780	910	
48	48.000	0.375	190.74	280	330	48
		0.406	206.37	300	360	
		0.438	222.49	330	380	
		0.469	238.08	350	410	
		0.500	253.65	380	440	
		0.562	284.73	420	490	
		0.625	316.23	470	550	
		0.688	347.64	520	600	
		0.750	378.47	560	650	
		0.812	409.22	610	710	
		0.875	440.38	660	770	
		0.938	471.46	700	820	
		1.000	501.96	750	880	

NOTE: Some OD's, walls and grades are listed for information only and are not necessarily regular production items.
Some OD's, walls and grades are non-API.

E-7 – H-Flume Manufacturer Data

Contact Information:

Tracom Inc.
6575-A Industrial Way
Alpharetta, Georgia 30004
877-435-8637
www.tracomfrp.com

TRACOM INC

P.O. BOX 1519
ROSWELL, GA 30077
(770) 664-6513
(770) 664-6906 (FAX)

H-FLUME SPECIFICATIONS

The flume shall be a __ inch H-flume designed to measure flows from ___ to ___. The flume shall be a molded structure of fiberglass reinforced polyester. The interior surface shall have a ten (10) to fifteen (15) mil white ultraviolet-resistant gel-coat backed by a rich layer of resin and chopped glass forming a water and chemical resistant surface. The remainder of the laminate shall be fiberglass reinforced polyester containing not less than thirty percent (30%) glass content by weight. The thickness of the walls and floor of the flume shall not be less than one-fourth inch (1/4"); and shall be reinforced with stiffeners down the sides and across the bottom on flumes twelve inches (12") deep or greater. The stiffeners shall be joined together at the knee to form a rigid dimensionally stable flume.

The flume shall be provided with anchoring clips fastened along the side of the flume to be used for anchorage into the concrete. Stiffeners made of FRP angle/channel shall be provided across the top of the flume to provide structural support during shipping and installation.

Flume dimensions shall be accordance with the United States Department of Agriculture, Handbook No. 224. The flume shall be as manufactured by TRACOM, Inc., of Roswell, Georgia.

OPTIONS

The flume shall be provided with ...

1.* a head gauge calibrated in tenths of a foot, molded into the side of the flume,

2.* a removable 1/4" x 0.035 T-304 stainless steel bubbler tube, mounted in groove in flume wall,

3.* a two-inch (2") PVC female threaded tap.

4.* a bottom cavity for ISCO pressure transducer,

* ... at the point of measurement as indicated on the plans.

5. An attached fiberglass approach section measuring _____ feet long shall be provided.

6. An inlet adapter shall be provided to provide transition between a round pipe and the approach section of the flume for a _____ inch _____ type pipe. (Requires above approach section.)

7. Inlet bulkheads shall be provided pre-drilled for connection to a _____ inch _____ type pipe flange

8. A detached 12" stilling well with two inch (2") PVC female threaded tap

H - FLUME

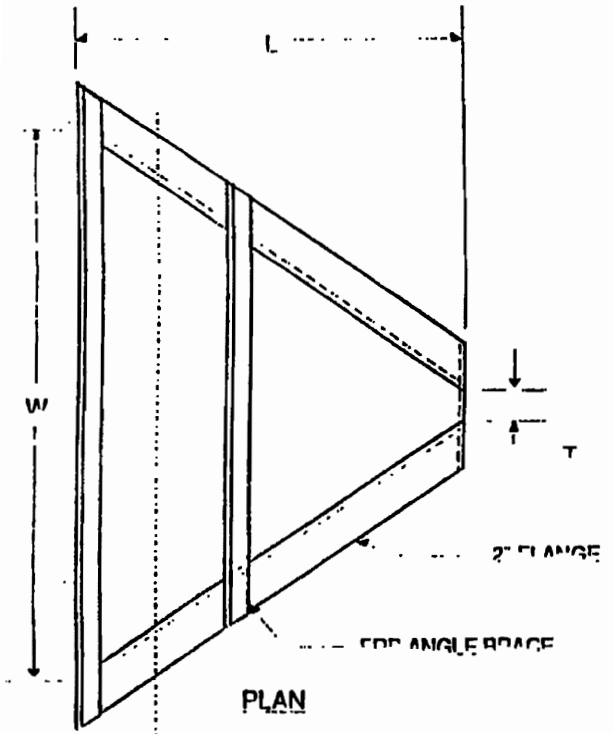

TYPE	SIZE	H	L	M	T	W	MIN. GPM	MAX. GPM
HS	0.4	4 13/16	7 3/16	2 7/16	1/4	5 1/16	0 071	36 08
HS	0.6	7 3/16	10 13/16	3 5/8	3/8	7 9/16	0 103	90.18
H	0.5	6	8 1/8	1 7/8	5/8	11 3/8	0 180	155 7
H	0.75	9	12 1/8	2 11/16	7/8	17 1/8	0.270	429 5
H	1.0	12	16 3/16	3 5/8	1 1/4	22 13/16	0.314	884.1
H	1.5	18	24 5/16	5 3/8	1 13/16	34 3/16	0 494	2,432
H	2.0	24	32 3/8	7 3/16	2 7/16	45 5/8	0.628	4,982
H	2.5	30	40 1/2	9	3	57	0.808	8,707
H	3.0	36	48 5/8	10 7/8	3 5/8	68 7/16	0.942	13,780
H	4.5	54	72 7/8	16 1/4	5 7/16	102 5/8	1.391	37,920

DIMENSIONS IN INCHES

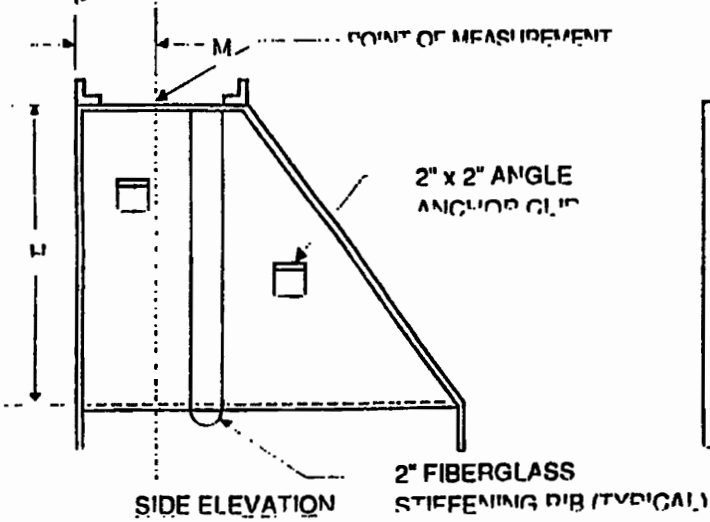

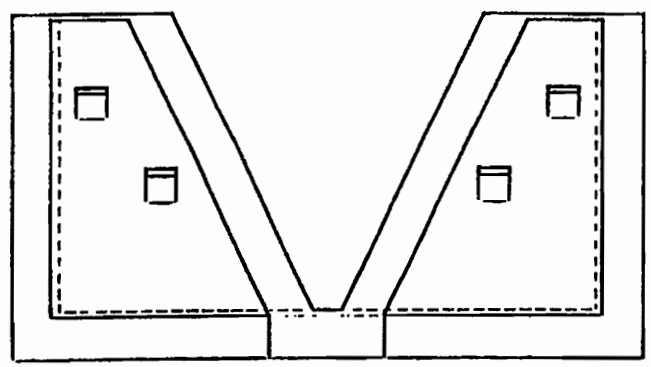

H-FLUME

DRAWING NO.	DATE	REVISION NO.
HF-TMP	May 1993	0

TRACOM

ROSWELL, GEORGIA

HL- FLUME

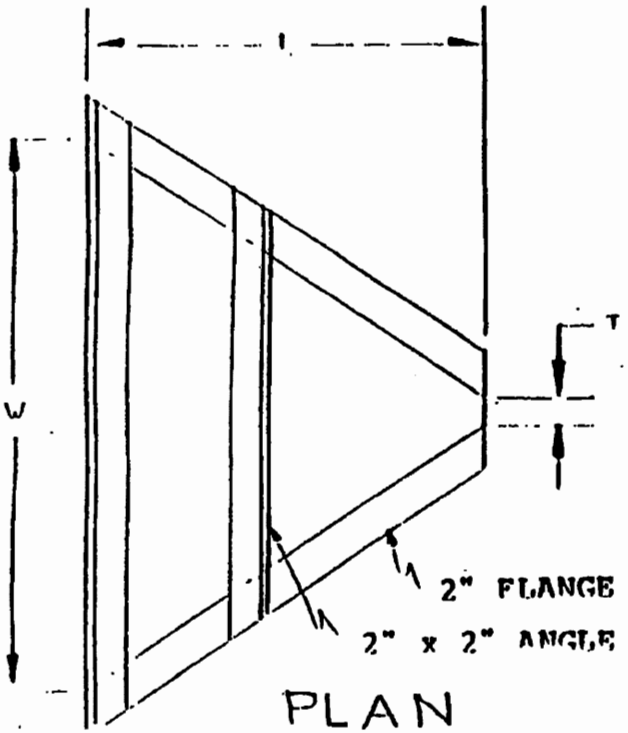

PLAN

SIZE-D	H	L	M	T	W	MAXIMUM GPM
2.0	2.0	3.0	0.5	0.4	6.4	9,290
2.5	2.5	3.75	0.625	0.5	8.0	16,246
3.0	3.0	4.5	0.75	0.6	9.6	25,581
3.5	3.5	5.25	0.875	0.7	11.2	37,654
4.0	4.0	6.0	1.0	0.8	12.8	52,509

DIMENSIONS IN FEET

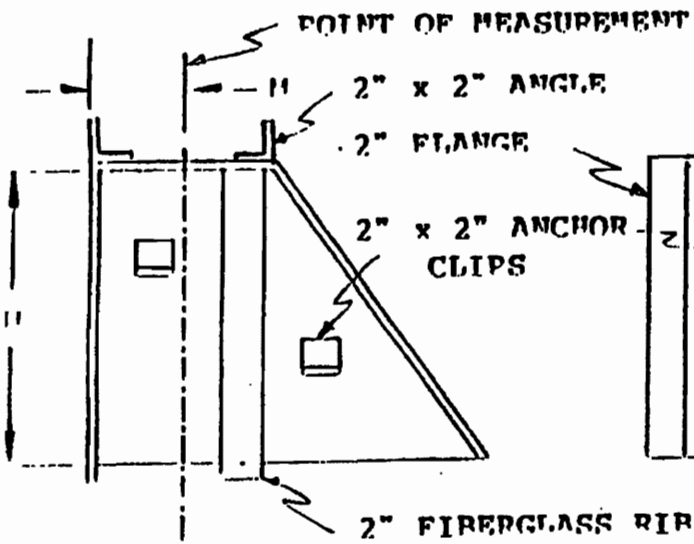

SIDE ELEVATION

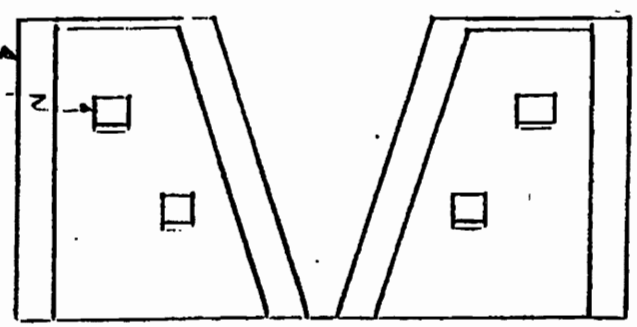

FRONT ELEVATION

TRACOM™

P.O. BOX 1519 ROSWELL, GA. 30077

HL- FLUME

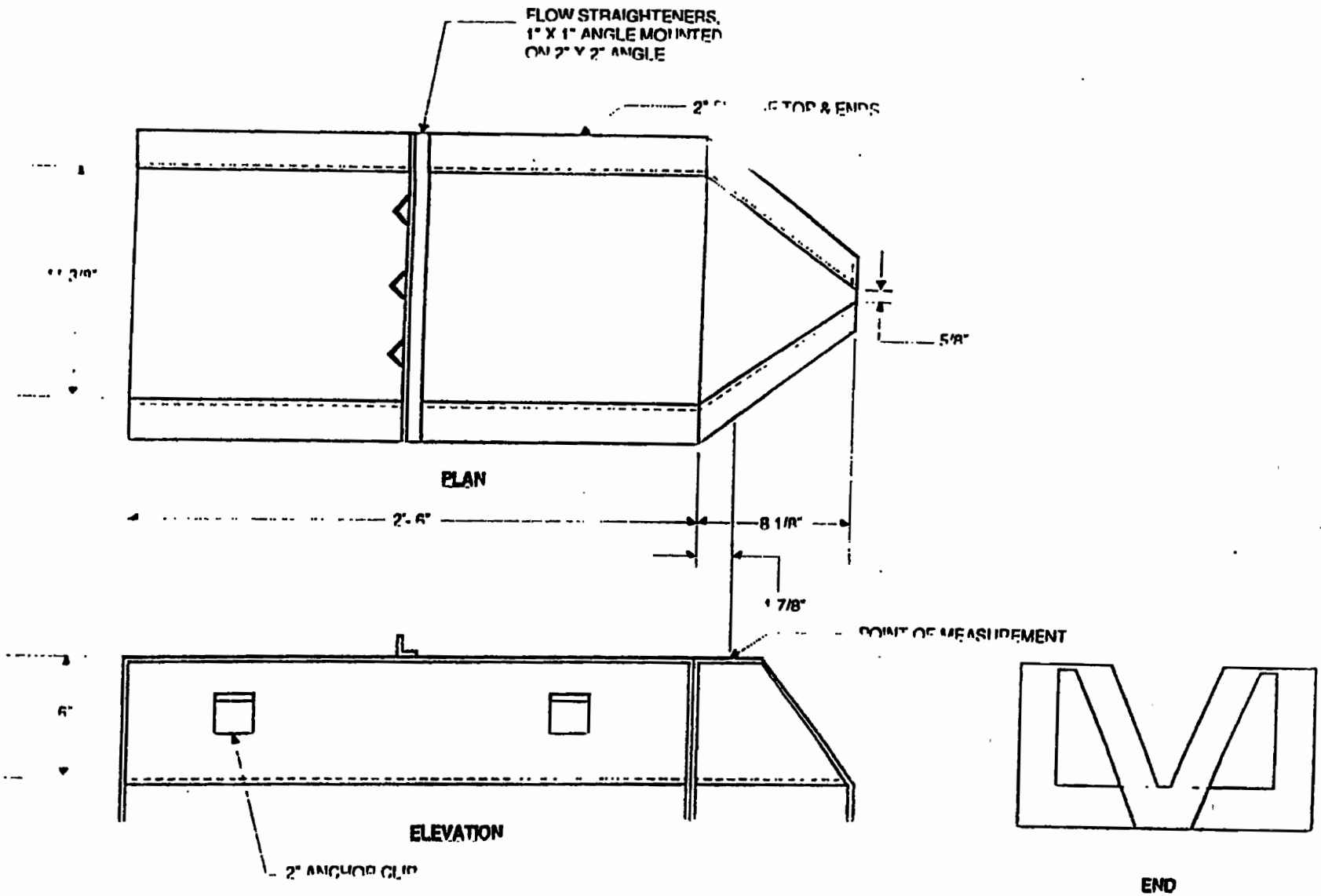

0.5' H-FLUME WITH APPROACH		
DRAWING NO.	DATE	REVISION NO
HF-0513	JAN.1994	0

TRACOM

ROSWELL, GEORGIA

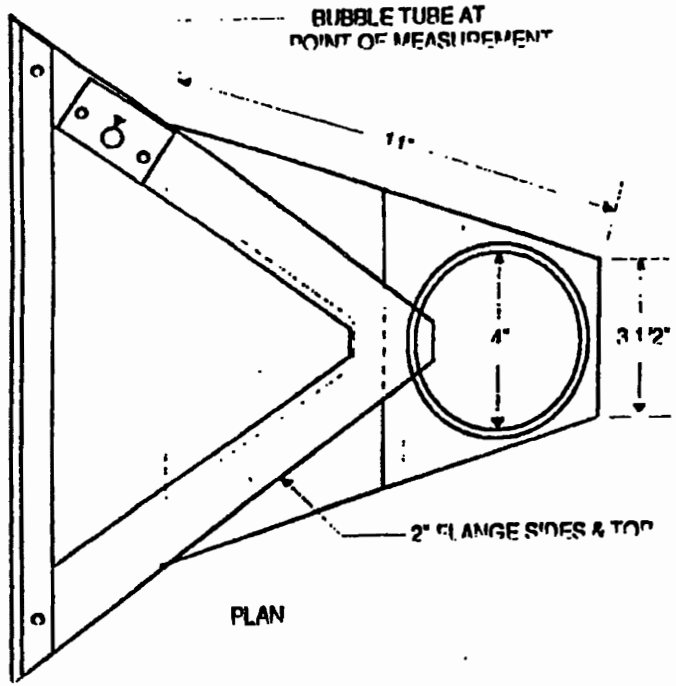

PLAN

1" X 1" FRP ANGLE

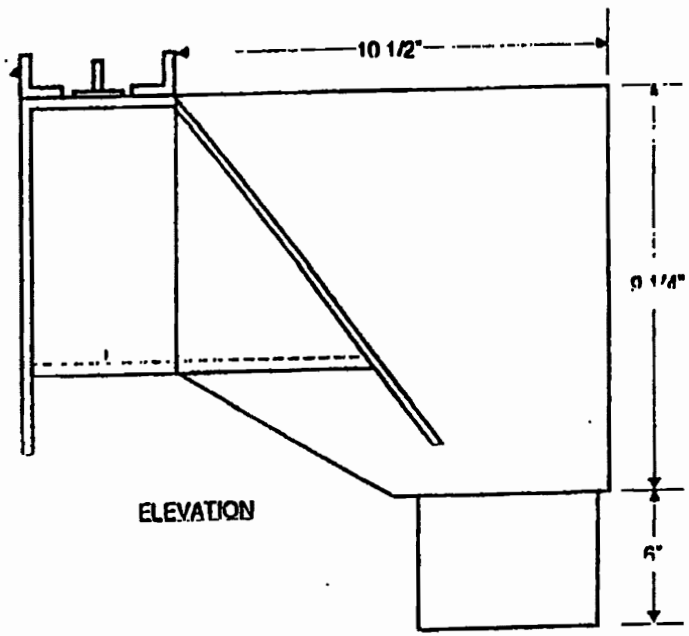

ELEVATION

0.5' H-flume, with bubble tube, and outlet catch box. Outlet box has 4" pipe stub in bottom. Sides of box are 1/4" FRP, 30% glass content.

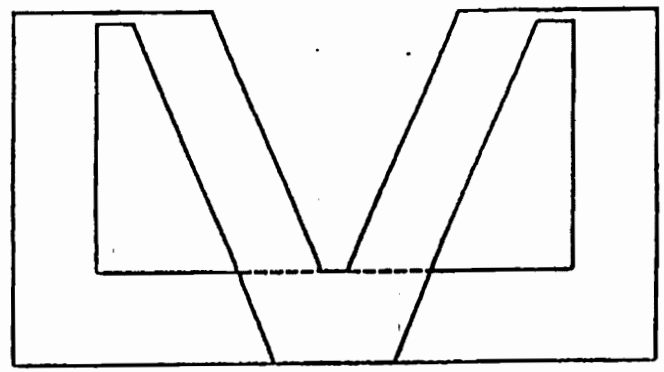

FRONT

0.5' H-FLUME WITH OUTLET ADAPTER		
DRAWING NO	DATE	REVISION NO
HF-0512	MAR. 1993	0

TRACOM

ROSWELL, GEORGIA

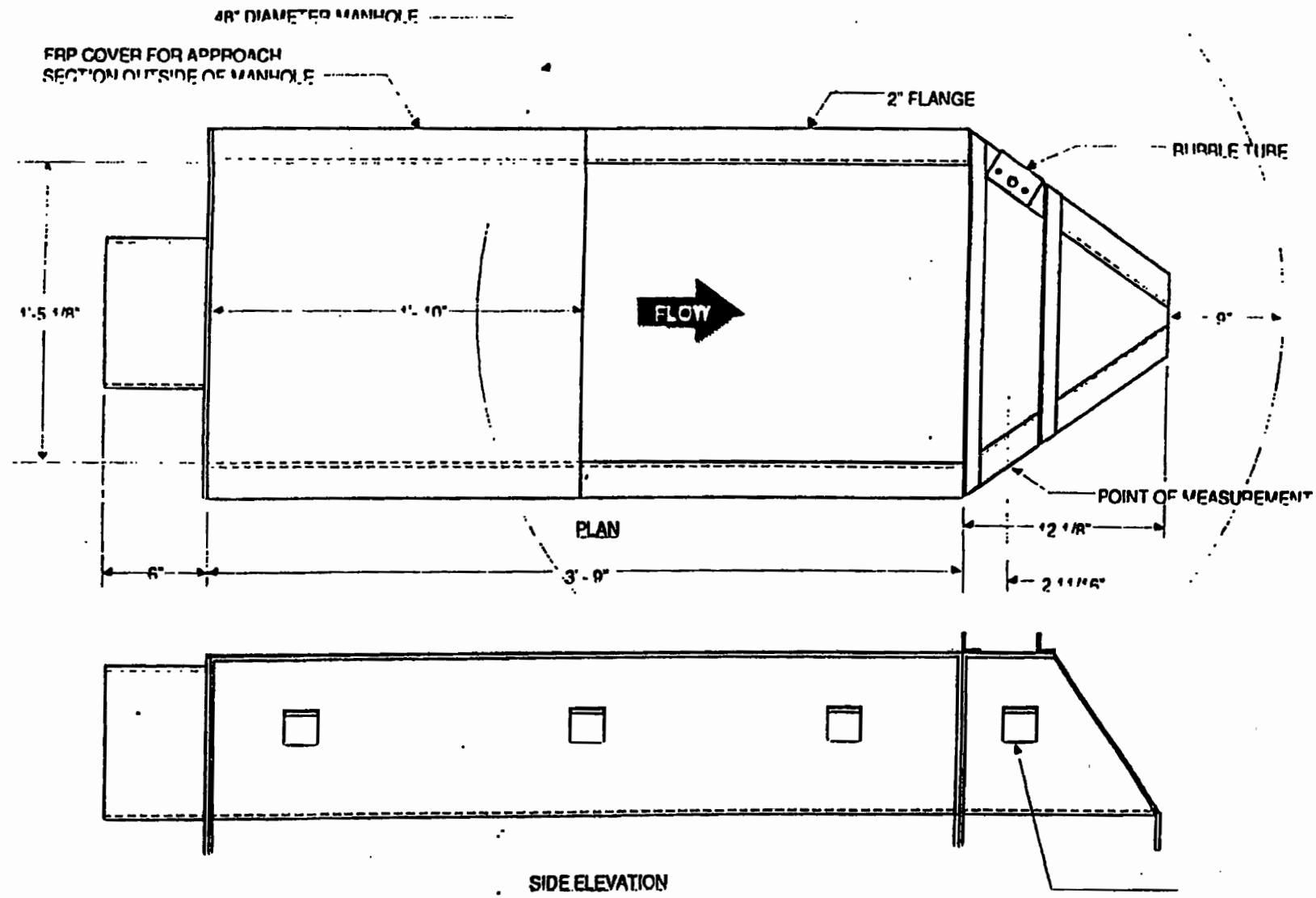

0.75' H-FLUME WITH APPROACH		
DRAWING NO.	DATE	REVISION NO
HF-07503	June 1994	0

TRACOM

ROSWELL, GEORGIA

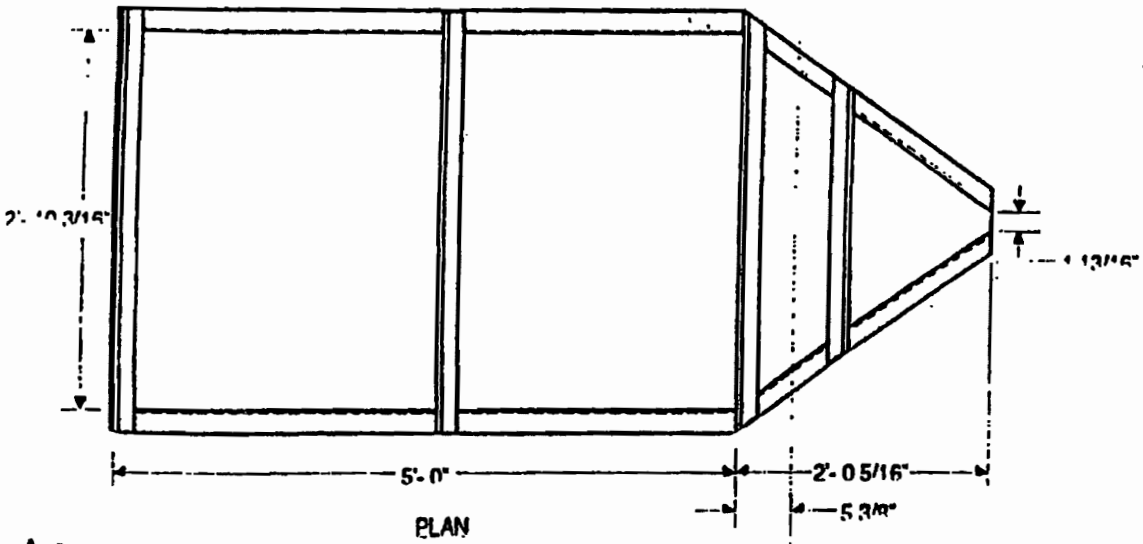

PLAN

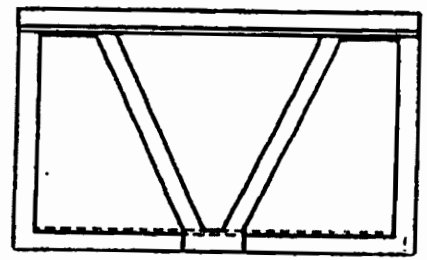

END ELEVATION

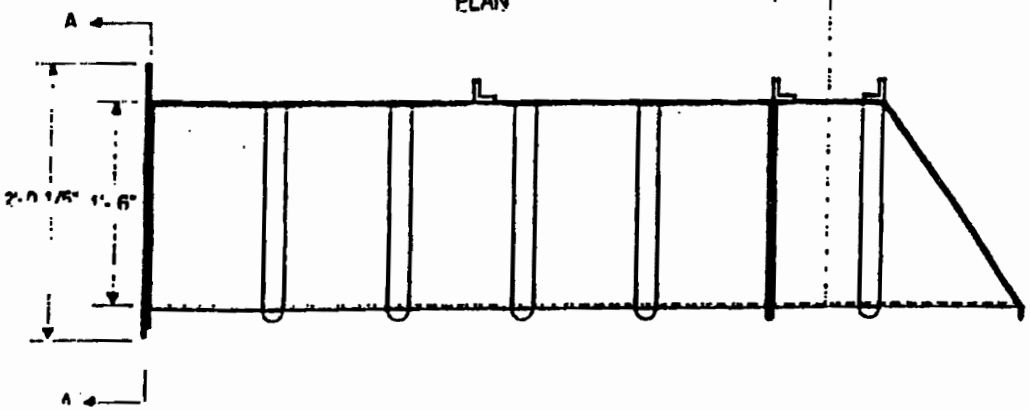

SIDE ELEVATION

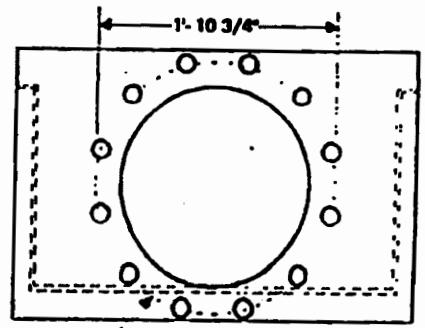

SIXTEEN 1 1/4" BOLT HOLES
STRADDLE A 1'- 10 3/4"
CENTERLINE

SECTION A - A

1.5 H-FLUME WITH APPROACH AND FLANGED BULKHEAD		
DRAWING NO.	DATE	REVISION NO.
HF-1503	JUNE 1993	0

TRACOM

ROSWELL, GEORGIA

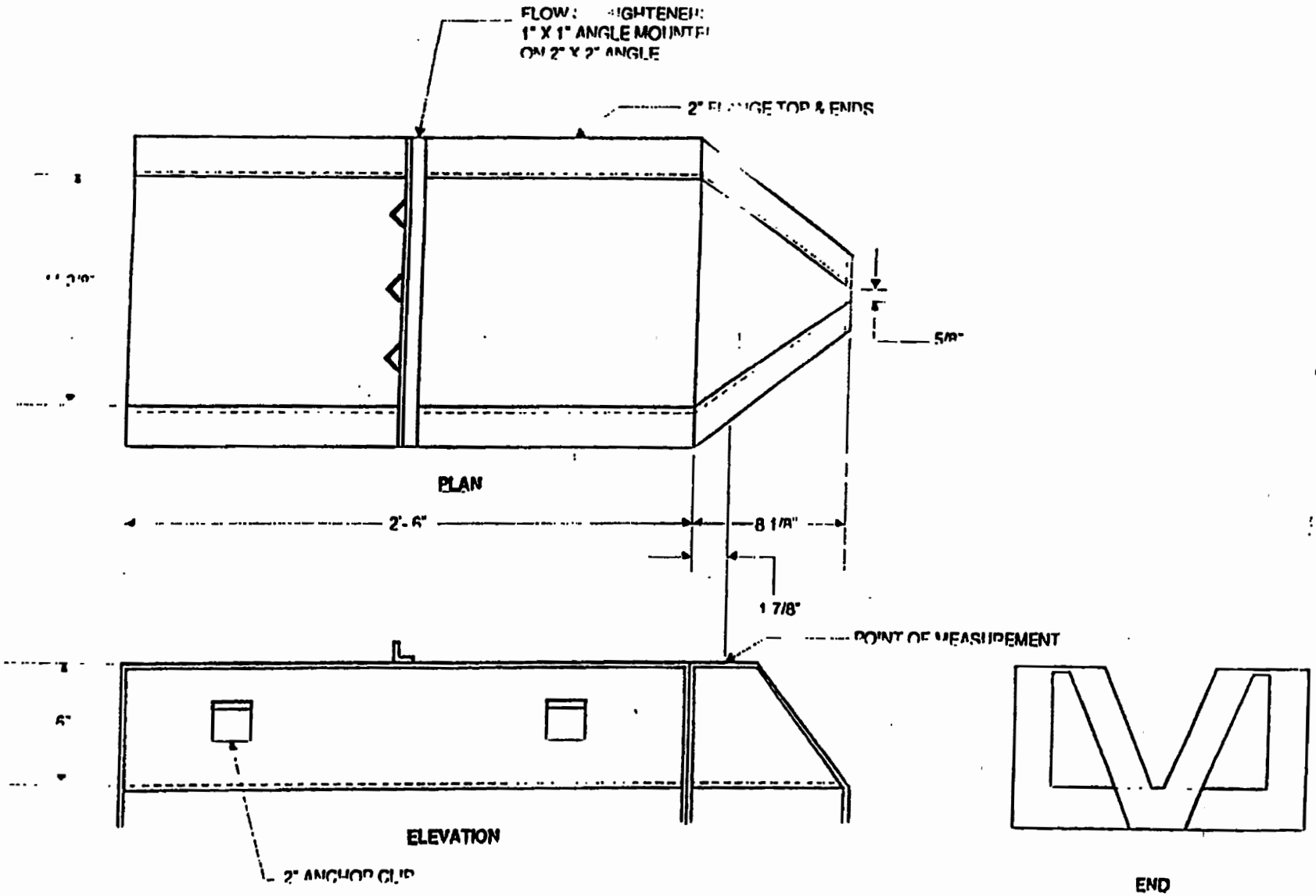

0.5' H-FLUME WITH APPROACH		
DRAWING NO.	DATE	REVISION NO
HF-0513	JAN.1994	0

TRACOM

ROSWELL GEORGIA

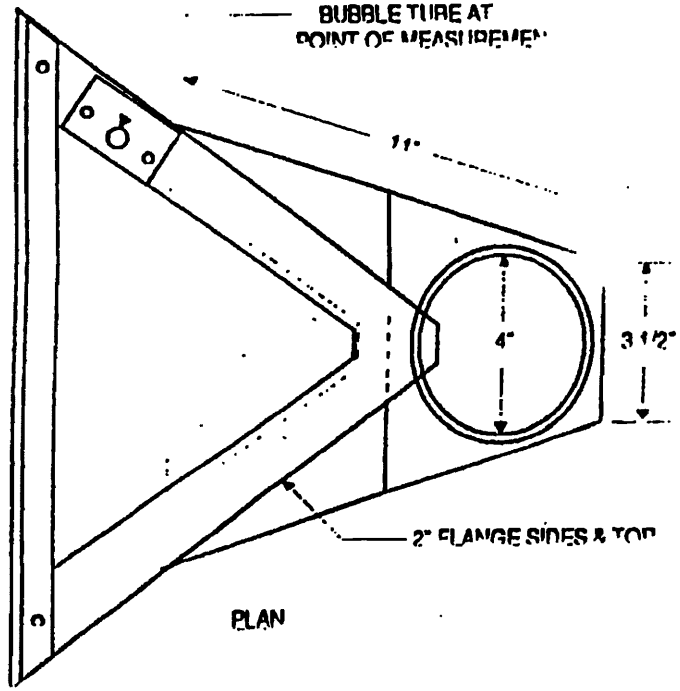

PLAN

0.5' H-flume, with bubble tube, and outlet catch box. Outlet box has 4" pipe stub-in bottom. Sides of box are 1/4" FRP, 30% glass content.

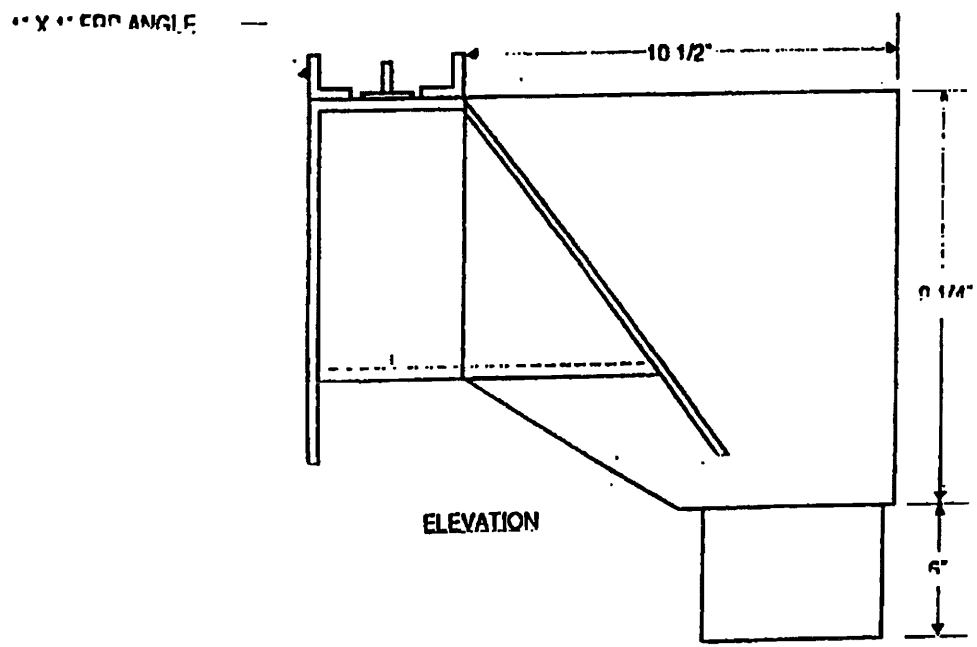

ELEVATION

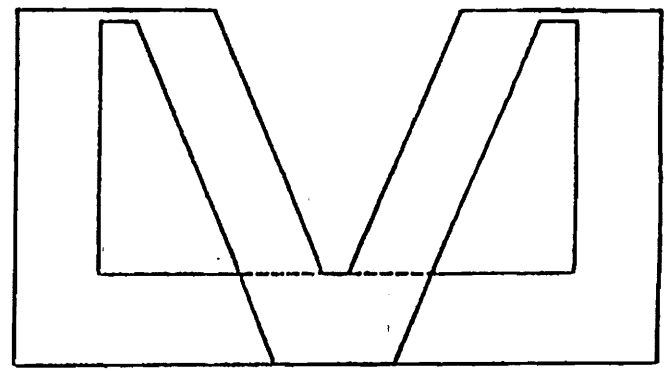

FRONT

0.5' H-FLUME WITH OUTLET ADAPTER		
DRAWING NO	DATE	REVISION NO
HF-0512	MAR. 1993	0

TRACOM

ROSWELL, GEORGIA

TRACOM INC

P.O. BOX 1519
ROSWELL, GA 30077
404/664-6513
FAX 404/664-6906

INSTRUCTIONS

**FOR INSTALLATION
OF H-FLUMES**

1. FOLLOW ALL INSTRUCTIONS PROVIDED BY PROJECT ENGINEERS IN THE FORM OF BLUE PRINTS, SPEC'S, ETC.

2. WHEN UNLOADING, USE SPREADER BAR AND **FABRIC** SLING FOR HANDLING. DO **NOT** USE CABLE OR CHAIN.

3. **LEVEL** FROM INLET TO OUTLET & SIDE TO SIDE. THE WALLS MUST BE VERTICALLY PLUME.

4. THE FLUME MUST BE INSTALLED WITH THE FLAT FLOOR LEVEL.

5. **ANCHOR** FLUME SECURELY BY USING SIDE CLIPS. RUN WIRE TO RE-BAR OR PUT ROD THROUGH CLIPS.

6. IF THE FLUME IS TO BE CAST IN CONCRETE OR BACK FILLED WITH EARTH, IT IS IMPORTANT TO AVOID DISTORTION. IT IS RECOMMENDED TO ROUGH IN AN OVERSIZED CHANNEL, THEN GROUT IN THE FLUME AFTER THE FIRST POUR HAS SET.

7. BE SURE TO **BRACE THE FLUME INTERNALLY** WHEN BACKFILLING. IF CONCRETE IS POURED AROUND FLUME, BE AWARE OF POSSIBLE BULGING DUE TO IMPROPER BRACING.

8. IT MAY BE NECESSARY TO PLACE SAND BAGS INSIDE THE FLUME TO PREVENT IT FROM FLOATING IN THE WET CONCRETE.

9. THE USE OF A VIBRATOR IS NOT RECOMMENDED.

10. WHEN FLUMES ARE SHIPPED IN TWO OR MORE PIECES, EACH PIECE IS PROVIDED WITH A TWO-INCH FLANGE. THE FLANGE HAS BEEN PREDRILLED FOR THE STAINLESS STEEL NUTS AND BOLTS PROVIDED. CAULK THE FLANGES WITH SILICONE RUBBER AND ASSEMBLE USING THE NUTS AND BOLTS. REMOVE ANY EXCESS SILICON FROM THE INSIDE OF THE FLUME. ALLOW THE SILICON TO CURE BEFORE SETTING THE FLUME.

E-8 – Ultrasonic Flow Recorder Manufacturer Data

Model 4210 Flowmeter and Model 674 Rain Gauge

Contact Information:

ISCO Inc./CM Kazmeir and Associates
1094 Mulberry Street
Loudon, TN 37774-1139
865-408-9500

ISCO Inc.
531 Westgate Boulevard
Lincoln, Nebraska 68528
800-228-4373
800-755-2965 (Technical Repair)
www.isco.com

INSTRUCTION MANUAL

MODEL 4210

FLOW METER

PART NO. 60-3214-110

Copyright 1994
By
Isco, Inc.
531 Westgate Boulevard
Lincoln, Nebraska, U.S.A. 68528
PHONE: (800) 228-4373; Technical Repair (800) 775-2965
FAX: (402) 474-6685

Outside the U.S.A., Canada, and Mexico
call (402) 474-2233
Issued: June 1, 1994
Rev. K, 11-97 (60-3213-285)

FOREWORD

This instruction manual is designed to help you gain a thorough understanding of the operation of the equipment. Isco recommends that you read this manual completely before placing the equipment in service.

Although Isco designs reliability into all equipment, there is always the possibility of a malfunction occurring. You can use this manual to help in diagnosing and repairing the malfunction, if possible.

If the malfunction persists, call or write the Isco Customer Service Department for assistance. (Address: Isco Inc., Environmental Division, 531 Westgate Boulevard, Lincoln, NE 68528-1586; Phone: [800] 228-4373 or [402] 474-2233 Fax: [402] 474-6685.) Simple difficulties can often be diagnosed over the phone. If it is necessary to return the equipment to the factory for service, please follow the shipping instructions provided by the Customer Service Department, including the use of the **Return Authorization Number** specified. **Be sure to include a note describing the malfunction.** This will aid in the prompt repair and return of the equipment.

Isco welcomes suggestions that would improve the information presented in this manual or enhance the operation of the equipment itself.

Table of Contents

CHAPTER 1 3

1. Introduction 3
2. Description 3
3. Compatible Equipment 4
4. Operating Principles 4
5. The Ultrasonic Level Sensor 4
6. How Battery Calculations Are Made 11

CHAPTER 2 13

1. Programming the Flow Meter 13
2. Keypad Functions 13
3. Programming Procedure 14
4. Description of Program Steps 15
5. Interpreting The Program Screens 18
6. Step 1 - Operating Mode 18
7. Step 2 - Flow Conversion (Level-to-Flow) 27
8. Enter Maximum Head - All Models 29
9. Step 3 - Port to Adjust 30
10. Step 4 - Reset Totalizer 32
11. Step 5 - Sampler Pacing 32
12. Step 6 - Sampler Enable 34
13. Step 7 - Alarm Dialout Mode 36
14. Step 8 - Printer Setup 37
15. Step 9 - Reports/History 38

CHAPTER 3 40

1. Installation 40
2. Connection to a Power Source 40
3. Flow Meter Mounting and Installation Procedures 43
4. Error Factors Affecting Performance of the Ultrasonic System 43
5. Accessories for the Ultrasonic Level Sensor 45
6. General Mounting Considerations for the Ultrasonic Level Sensor 46
7. Associated Equipment 51

CHAPTER 4 53

1. Optional Equipment 53
2. 4200T Modem 53
3. Connection to External Serial Device 54
4. 4 to 20 mA (Analog) Outputs (External & Internal 55
5. Tipping Bucket Rain Gauge 57
6. Isco FLOWLINK Software 57
7. High-Low Alarm Relay Box 57
8. Model 3200SH Short Haul Modem 58
9. Parameter Sensing with Isco 4200 Series Flow Meters 59
10. The Temperature Probe 60
11. The pH Probe 60
12. The Dissolved Oxygen (D. O.) Probe 64
13. Installation of Parameter Probes in Round Pipes 67
14. The YSI 600 Multiple Sensor Sonde 70
15. Mechanical Totalizer 71

CHAPTER 5 72

1. Routine Maintenance 72
2. Maintenance of the Internal Printer 74
3. Servicing and Troubleshooting 76
4. System Reset 77
5. Preliminary Troubleshooting Steps 78
6. Precautions for Servicing CMOS Circuitry 79

Replacement Parts List 83

Accessory/Options Parts List 87

Programming Worksheet 89

Appendix 1 - Safety Information 93

Safety Considerations 93
1. General Safety Procedures 93
2. Lethal Atmospheres in Sewers 96

Index 99

List of Illustrations

The Model 4210 Flow Meter 3
Model 3012 Ultrasonic Level Sensor 5
Model 4210 Front Panel, Showing Controls 6
Side View of Flow Meter Showing Connectors 7
Measuring Flow Meter Current 12
The YSI 600 Sonde 16
YSI Calibration Flow Chart 33
Flow Meter History Contents 39
Battery Installed on Flow Meter 41
Power Supply Installed on Flow Meter 42
Flow Meter Suspended by Harness 44
Ultrasonic Level Sensor "Dead Band" 47
Mounting the Ultrasonic Level Sensor 48
4-20 mA Output Interface 55
Model 674 Tipping Bucket Rain Gauge 57
Temperature Probe 60
pH Probe 61
pH Parameter Module 63
The D. O. Probe 64
D.O. Parameter Module 66
Spring Ring (15" and Under) 67
Four Foot Probe Extension 68
Scissors Ring 68
Scissors Ring Components 69
The YSI Multiple Sensor Sonde 70
Location of the Internal Desiccant Canister 73

Changing the Roll of Paper 74
Changing the Ink Ribbon 75
Lifting the Flow Meter from the Cabinet 77
Location of the Three Fuses 78
Illustrations for the RPL 81

List of Tables

Controls, Indicators, and Connectors of the Model 4210 Flow Meter 8
Technical Specifications of the Model 4210 Flow Meter 9
FLOWLINK and Level Sensor Specifications 10
Model 4210 Chart Longevity at Various Speeds 11
Battery Life Expectancy at Various Settings 11
4-20 mA Output Interface Specifications 56
Technical Specifications for the Short Haul Modem 59
pH Probe Specifications 63
D. O. Probe Specifications 66
YSI 600 Technical Specifications 70

IMPORTANT – PLEASE READ

WARNING

The installation and use of this product may require you to work in locations where you could be seriously injured or even *killed.* Take whatever precautions are necessary to ensure your safety before entering the installation. *Never* work alone or unsupervised. Install and operate this product in accordance with all applicable safety and health regulations, as well as any appropriate local ordinances.

This product is often installed in ***confined spaces***. Examples of confined spaces are manholes, pipelines, digesters, and storage tanks. These places can be dangerous ***or fatal*** if you are not suitably prepared. The primary hazards are the presence of poisoned air, the lack of ventilation, and the possibility of falls. Other hazards may be present, as well. Work in such places is governed by **OSHA 1910.146**, and may require a permit before entering.

Material Safety Data Sheets (MSDS) for chemical agents supplied or recommended for use with this product are in the ***MSDS Appendix.*** These sheets provide information about possible hazards from the chemicals. Additional MSDS, covering various ***proprietary agents*** (name-branded or trademarked mixtures) that can also be used with this product, are available from the manufacturers of those agents.

NOTE

FLOWLINK is a registered trademarks of Isco Inc. All other brand or product names used in this manual are trademarks or registered trademarks of their respective companies and/or organizations.

This manual uses the following notations to set apart hazard warnings and notes:

DANGER

DANGER describes situations which if not avoided, *will* result in loss of life or serious personal injury. The emphasis is on a clear and immediate threat to your life or safety.

WARNING

WARNING describes situations which if not avoided, *could* result in loss of life or serious personal injury. The emphasis here is on the *potential* for a serious accident.

CAUTION

CAUTION describes situations which if not avoided, may result in moderate personal injuries, property damage, or damage to the equipment.

NOTE

NOTES draw your attention to specific features, practices, or other information useful in setting up or installing the product.

CHAPTER 1

1. Introduction

This chapter provides a general introduction to the Model 4210 Ultrasonic Flow Meter. It includes a description, an explanation of how the unit operates, and technical specifications.

Manual Organization - This manual provides the information necessary to operate, maintain, and perform minor service on the Model 4210. The manual is organized into five chapters:

Chapter 1: Introduction, operation, and technical specifications for the flow meter.

Chapter 2: Keypad operation and programming.

Chapter 3: Installation and options application-specific to this flow meter.

Chapter 4: Options and accessories for all 4200 Series Flow Meters.

Chapter 5: Routine maintenance procedures and minor servicing information.

Following **Chapter 5** are appendices covering safety, accessory parts, replacement parts, etc.

2. Description

The Model 4210 uses ultrasonic reflection to measure level in flow stream. The flow meter is normally used with some type of primary measuring device to measure flow in an open channel. The Model 4210 has built-in level-to-flow conversions that cover the vast majority of open channel flow measurement situations.

Additionally, the flow meter lets you enter an equation, or data points. The Model 4210 supports the Isco data storage, acquisition, and retrieval system with the use of optional FLOWLINK software. The Model 4210 has enough memory to store 40,000 data readings. An optional 4200T Modem, with speech capability, is available to transmit stored data over standard dial-up telephone lines and call out on alarms.

Figure 1. The Model 4210 Flow Meter

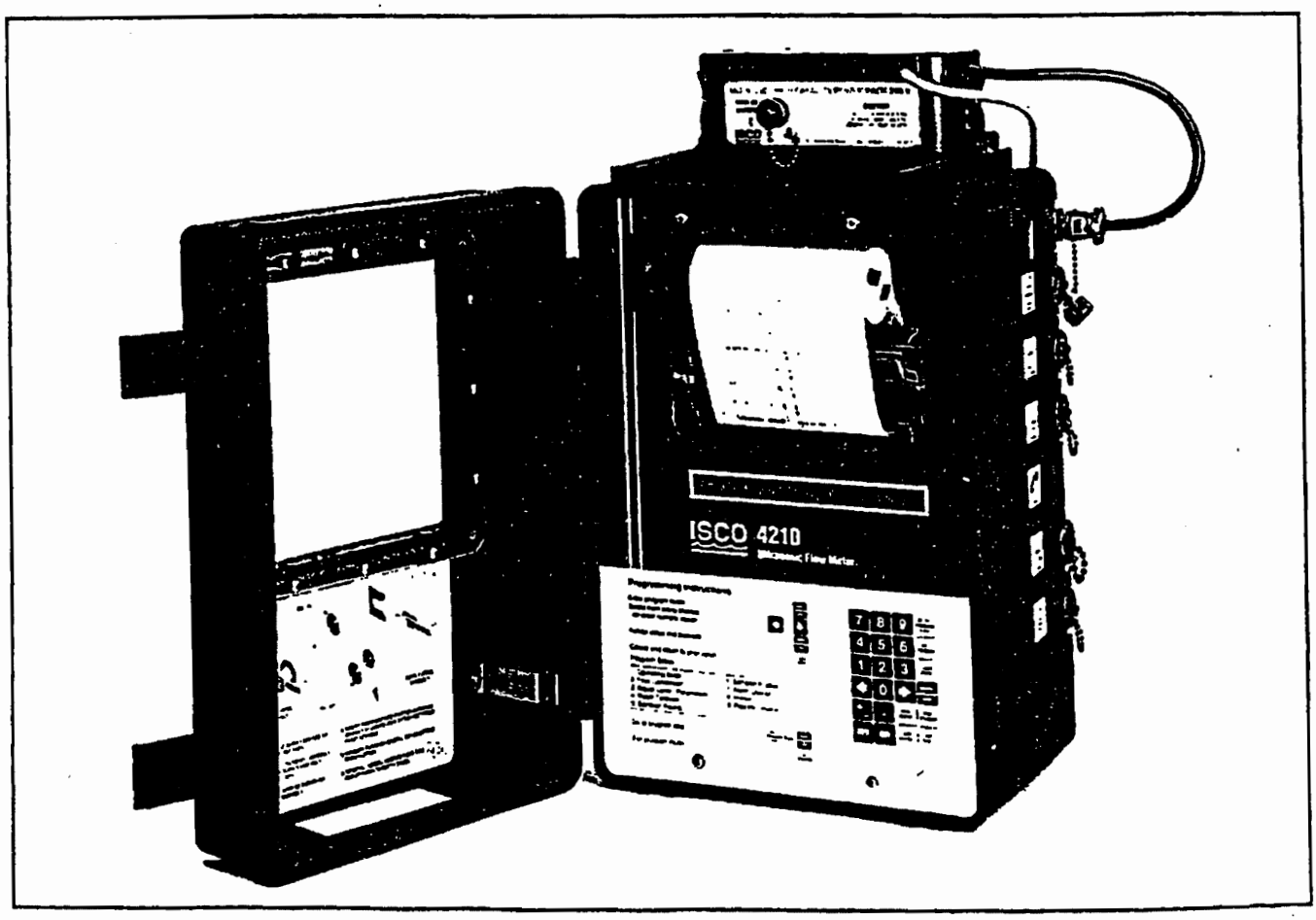

3. Compatible Equipment

The Model 4210 Flow Meter may be used with the following equipment:

Manufactured by Isco

- 2700 Series Sequential, Composite and Refrigerated Samplers
- 3700 Series Sequential, Composite and Refrigerated Samplers
- 2900 Series Sequential and Composite Samplers
- 4 - 20 mA Output Interface
- Model 674 Tipping Bucket Rain Gauge
- High Low Alarm Relay Box

Manufactured by Others

- IBM Personal Computer or compatible clone with Isco FLOWLINK software
- Laptop Computer with Isco software
- YSI 600 Multi-Parameter Sonde

Optional Accessories

- 4200T Modem - Speech-capable, with connector and cable
- Model 2312 Plotter
- Parameter Modules (pH and D. O.)
- Ultrasonic level sensor extension cable in length of 25 feet.
- Isco FLOWLINK Software
- Cable stiffener for the level sensor
- Mounting bracket for the level sensor
- Ultrasonic Sunshade
- Calibration Target
- Cable Clamp
- Floor Mount

4. Operating Principles

The Model 4210 normally measures flow rate with a primary measuring device (weir or flume) or other open-channel flow arrangement where there is a known relationship between liquid level and flow rate. The Model 4210 can also measure flow in round pipes by using the Manning equation. The level-sensing device is an ultrasonic transducer. The flow meter electronically converts the level reading into a properly scaled flow rate. The flow meter also provides standard or optional flow-related output signals to be used for:

Flow-proportional sampler pacing

Transmitting level and flow data to an external device on a serial communication loop

Data transfer through a modem

Control of a 4 - 20 mA device

Data transfer by a laptop computer

The flow meter contains a microprocessor that calculates level and flow rates from the signals produced by the ultrasonic level sensor, stores programming instructions and operates the display and internal printer. An alphanumeric liquid crystal display (LCD) shows total flow, level, and flow-rate. It also assists in programming the flow meter during initial set up or subsequent changes. An internal printer provides a "hard copy" printout of the information computed by the flow meter, plots level or flow rate, and generates reports. Connectors for other equipment used with the Model 4210 are on the side of the case.

5. The Ultrasonic Level Sensor

The ultrasonic level sensor mounts directly over the flow stream. The flow meter measures level by transmitting an ultrasonic pulse toward the liquid surface and then measuring the time it takes for the echo to return. The ultrasonic level sensor consists of an enclosure with a single transducer acting both as pulse transmitter and echo receiver. Since the speed of the pulse through the air varies with temperature, compensation is built-in. A temperature sensor inside the enclosure measures ambient temperature. The microprocessor program automatically compensates for speed-of-sound changes caused by air-temperature changes.

Transducer Operation

Several times a second, the ultrasonic level sensor emits a pulse. Between pulses the transducer becomes a receiver or microphone, ready to sense the echo reflected from the surface of the liquid. When the transducer receives the echo, the sound energy changes into a small electrical pulse, that is amplified and detected by the flow meter to produce an echo-received signal. The time between the transmitted pulse and echo-received signal is proportional to the distance between the transducer and the liquid surface. This distance determines the liquid level.

Validity Tests and Error Display

The flow meter checks the measured level for validity. If it cannot obtain a valid level, it will repeat the process. If the flow meter cannot obtain a valid reading after about one minute the level reading will drop to zero with an asterisk (*) to indicate there is an error.

Ambient Air Temperature Factor

The ultrasonic measurement technique used in the Model 4210 Flow Meter is based on the speed of sound in air.

Figure 2. Model 3012 Ultrasonic Level Sensor

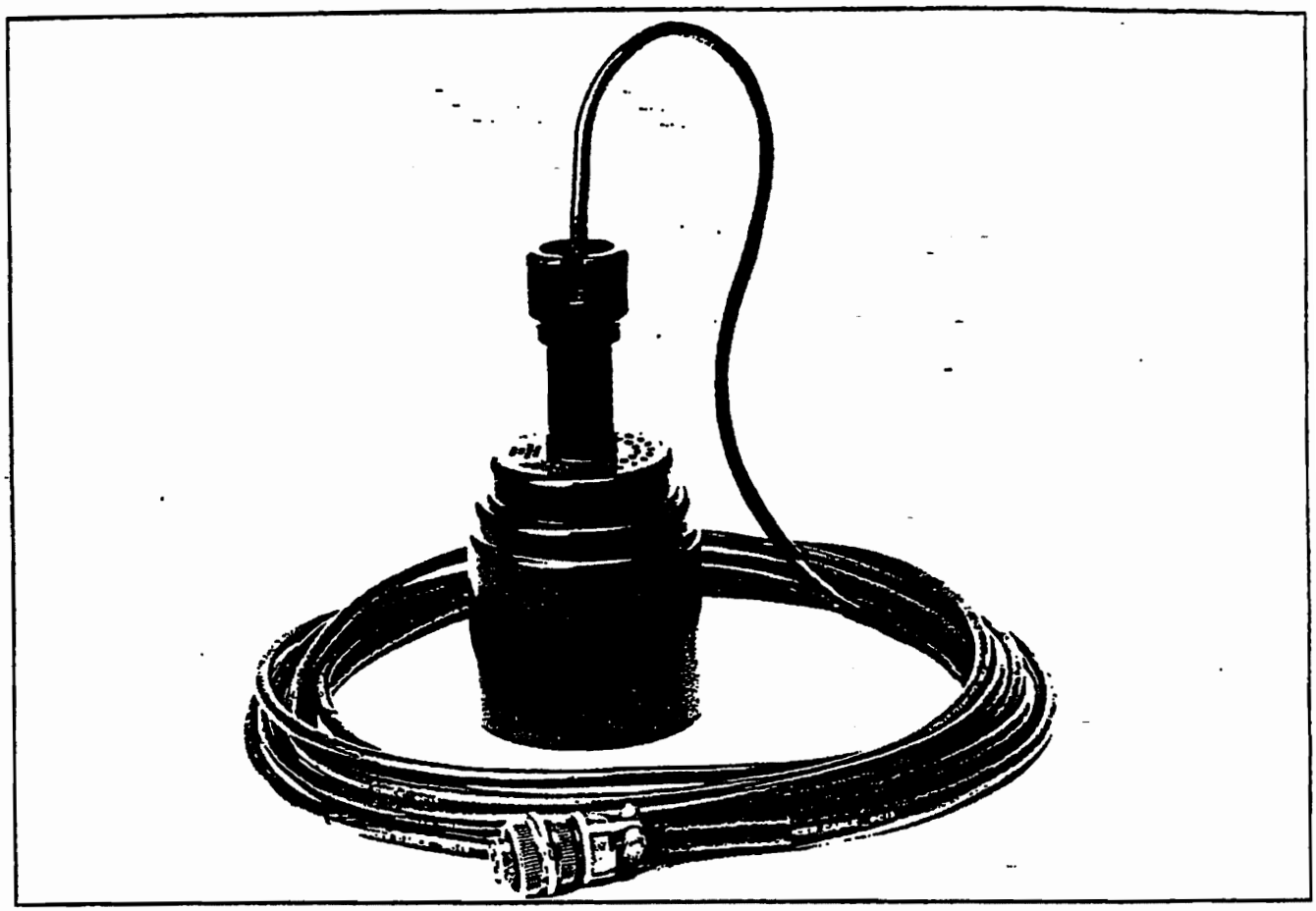

Since the speed of sound in air varies with temperature (approximately 1% for 10° variation), compensation must be provided. The ultrasonic level sensor uses both air temperature and microprocessor-based compensation to accurately account for air temperature variations.

Return Echo Amplifier Compensation

The strength of the echo depends on several factors, including the distance between the transducer and the water surface. For every 2½ foot increase in the distance between the transducer and the liquid surface, the strength of the returned echo decreases by half. Consequently, the flow meter must compensate the gain of the return echo amplifier for distance. As the distance increases between the transducer and the liquid surface, the gain of the echo amplifier increases with time to compensate for the decreasing signal strength of the echo. This type of amplifier, whose gain characteristic is based on a repeating time interval, is referred to as a ***ramp-gain amplifier.***

Software Upgrades

New with the 4200 Series Flow Meters is the capability of upgrading the flow meter's software without having to return the unit to the factory or change an EPROM. With Flash Memory, software updates can easily be installed in the field with a disk, a computer, and a cable. For more information about installing software upgrades in the Model 4210 Flow Meter, contact your Isco representative or call the factory.

Controls, Indicators, and Connectors

The controls, indicators and connectors of the Model 4210 Flow Meter are listed in **Table 1**, and their functions are briefly described. Refer to **Figure 3** for a view of the controls and indicators, and **Figure 4** for a view of the connectors.

Technical Specifications

The technical specifications for the Model 4210 are found in **Table 2 & 3.** Chart longevity for the Model 4210 internal printer is found in **Table 4. Battery life expectancy** is in **Table 5** followed by a section on making battery calculations.

NOTE

Various accessories are available for the Model 4210 Flow Meter. The part numbers for these items are listed on an **Accessory Parts List**, which will be found at the back of the **Replacement Parts List.**

Figure 3. Model 4210 Front Panel, Showing Controls

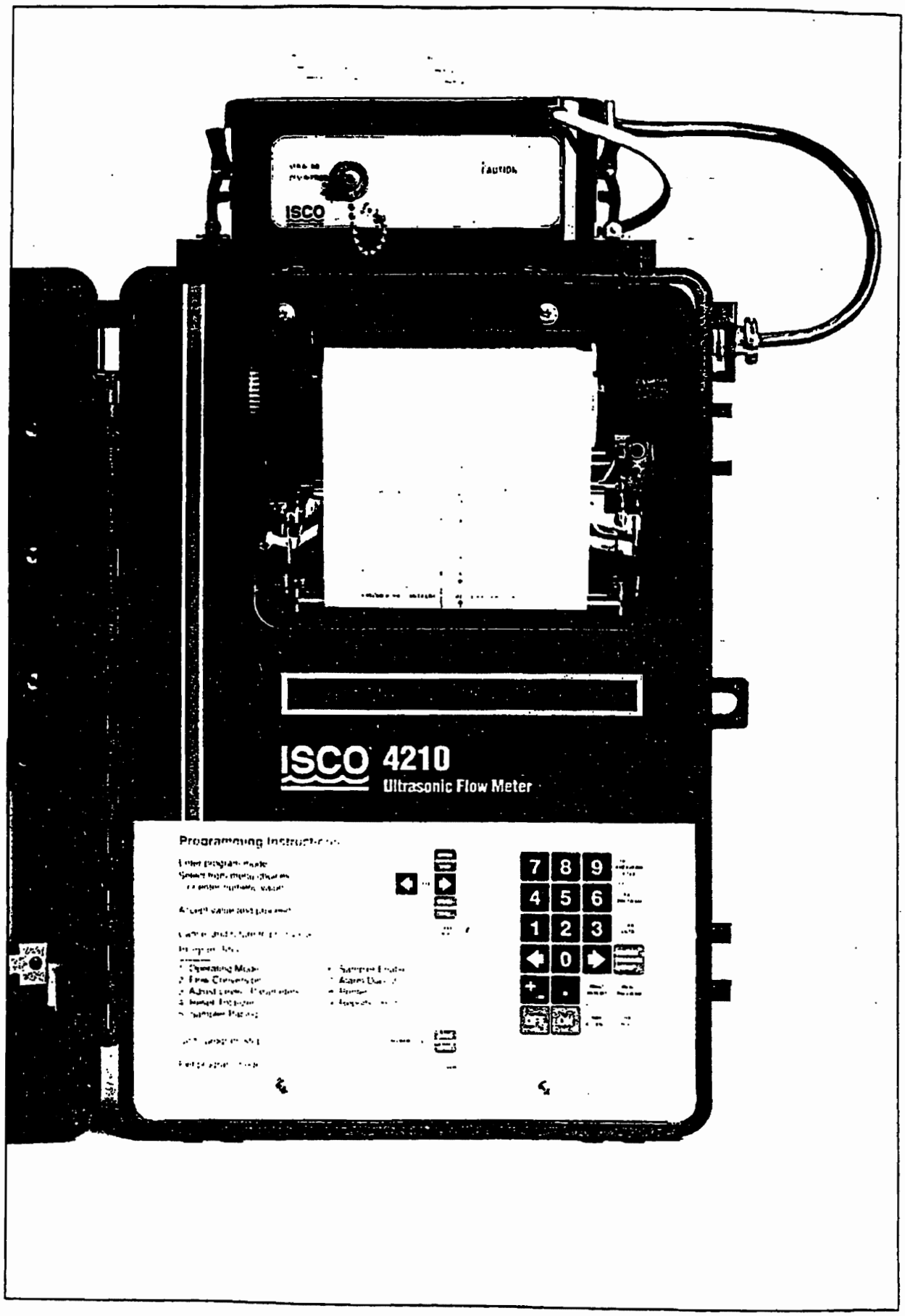

Side View of Flow Meter Showing Connectors

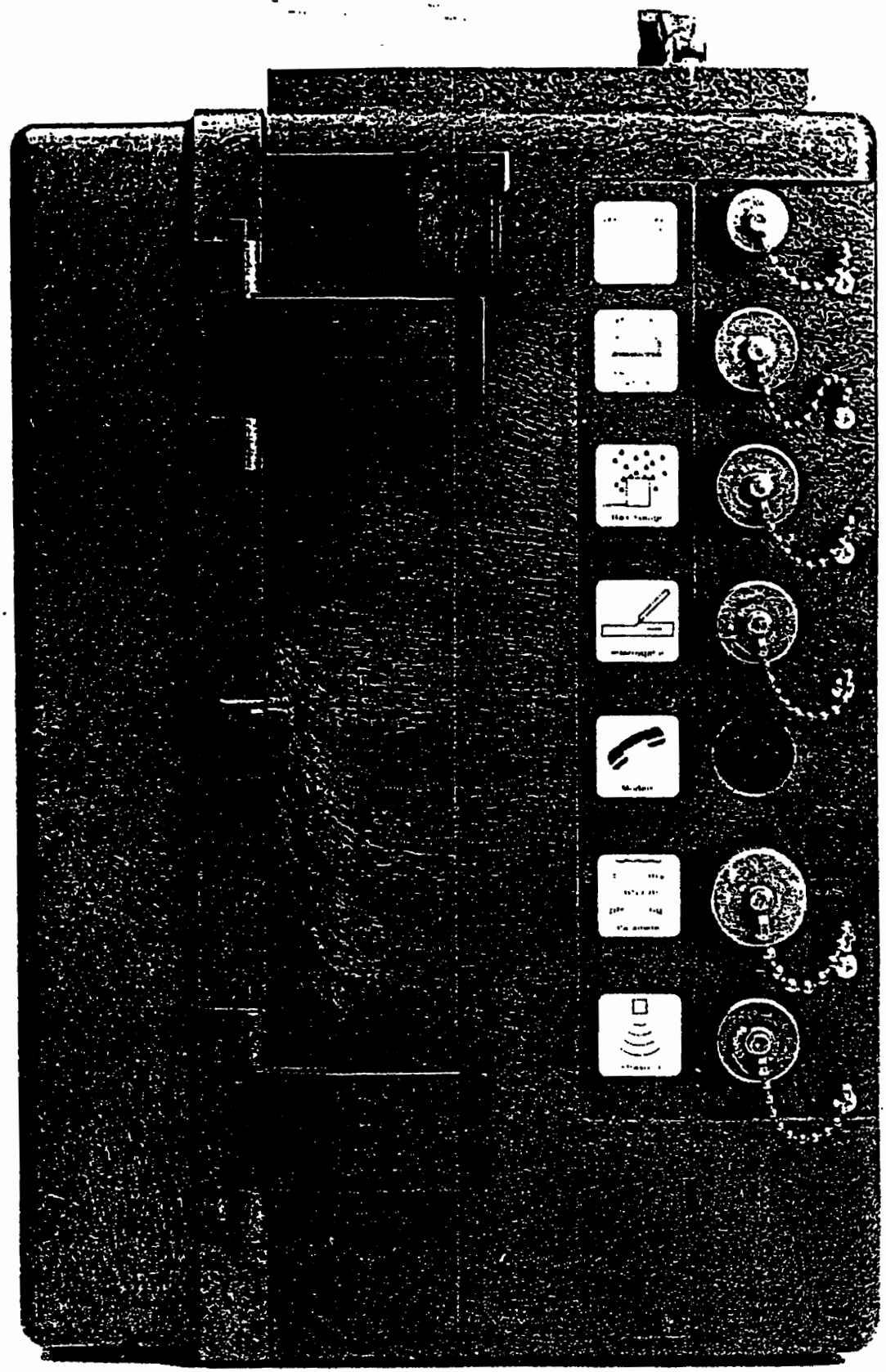

Table 1: Controls, Indicators, and Connectors of the Model 4210 Flow Meter

CONTROLS	SETTINGS	FUNCTION
ON/OFF	On - Off	Turns the flow meter on and off. Internal memory is protected with a standby battery. See Chapter 2.
Keypad	Momentary Switches	24-key. 4 column matrix - Program flow meter through series of keystrokes prompted by messages on the display. Certain keys perform specific functions, (printing reports or entering program choices into memory). Arrow keys move through menus. Number keys enter numeric values.See Chapter 2.
INDICATOR	**READING**	**FUNCTION**
Display	Multi-function	2-line, 40 characters per line, liquid crystal display (LCD.) Prompts you through program procedure; displays total flow,. present flow rate and level. May also display parameter readings, if sensors present.
Internal Printer	Various	Provides "hard copy" of total flow, level or flow rate variation over time; provides sampling information and a printout of the program. Prints reports. Generates up to 3 different linear data plots. Chart characters and plots are generated on plain paper roll with an ink ribbon.
CONNECTOR	**TYPE**	**FUNCTION**
12 VDC	2-pin male M/S	Connects 12 VDC power to flow meter
Sampler	6-pin male M/S	Connects flow meter to sampler; provides flow pulse to sampler; receives sampler bottle number, composite sample and event mark signal.
Ultrasonic Level Sensor	4-pin, male M/S	Connects ultrasonic level sensor to flow meter.
Rain Gauge/ YSI 600 Sonde	9-pin female M/S (Custom)	Connects flow meter to an Isco Rain Gauge or YSI 600 Multi-Parameter Sonde. Also provides output to High Low Alarm Relay Box or Model 2312 plotter.
Interrogator	6-pin female M/S	Provides serial data in/out and power. Can also be used with 4-20 mA Output Interface.
Modem (optional)	5-pin male M/S	Connects flow meter to telephone line for remote data transmission. This connector will only be present on units that have the optional modem installed.
Parameter	7-pin female M/S	Connects flow meter to parameter sensor: temperature, pH, or D. O. Note that you can only have temperature and one parameter (pH or D. O.) at the same time.

Table 2: Technical Specifications of the Model 4210 Flow Meter

Physical and Electrical	
Size:	16" high × 11 ½" wide × 10 ½" deep (41.9 cm × 29.2 cm × 26.7 cm) without power source.
Weight:	17 lb. 4 oz. (7.84 kg)
Material:	High-impact molded polystyrene structural foam.
Type:	Self-certified NEMA 4X Enclosure.
Display Type:	2-line, 40 character/line alphanumeric dot matrix liquid crystal.
Power:	12 -14 VDC, 16 mA average at 12.5 VDC (Printer set at 1" per hour).
Typical Battery Life:	7-10 days with printer at 1" per hour and 4 Ampere-hour Ni-Cd battery. 14 days with printer turned *off*, and *1 minute* level reading intervals.
Operating Temperature:	0° to 140°F (–18° to 60°C).
Storage Temperature:	–40° to 158°F (–40° to 70°C).
Additional Power Required for Optional Equipment	
Modem:	60 mA maximum during operation; 0.1 mA maximum standby.
Model 2312 Remote Plotter:	Less than 30 mA average current.
High-Low Alarm Relay Box:	10 mA standby, typical; 190 mA - maximum.
Internal Printer	
Chart Speeds:	Off, ½, 1, 2, or 4 inches per hour.(1.27, 2.54, 5.08 or 10.16 cm/h).
Ribbon:	19.7 ft. (6 m) black nylon - replaceable.
Operating Speed:	1.5 lines per second at 68° F. (20° C).
Character Size:	0.09" high × 0.07" wide (2.4mm × 1.7 mm), 12 pitch.
Printer Recording Span: (for level, other plots possible) Chart Resolution: Display Resolution:	User-selected from ¼ ft. (3.6 cm) to over 30 ft. (9.1 m) with multiple over-ranges. 1/240 of selected recording span 0.001 ft. (0.3 mm)
Paper:	4.5" wide × 65 ft. (11.4 cm × 19.8 m) plain white paper, replaceable.
Printer Reliability:	2.5 million lines MCBF (mean cycles before failure).
Reports Printed:	Program selections, interval activity reports, flow meter history.
Printer Recording Modes:	Level over time, flow rate over time; includes totalized flow, sampler events, rainfall, temperature, pH (or) D. O. (dissolved oxygen).
Plotted Linear Data:	3 different linear plots can be printed at the same time.

Table 3: Technical Specifications for the Model 4210 Flow Meter (FLOWLINK and Level Sensor Specifications)

Isco FLOWLINK Data Storage and Retrieval System	
Memory Partitions:	Maximum of 6 user-defined memory partitions for level or event storage.
Timing Interval:	Timing for level storage user-selected in 1, 2, 5, 10, 15, 30, 60, or 120 minute intervals.
Baud Rates:	Serial connection - 300, 1200, 2400, 4800, or 9600 baud. Serial connection with the optional internal modem - 2400 baud.
Storage:	80,000 bytes, apportioned per reading as follows: flow = 4 bytes, level = 2 bytes, sample = 4 bytes, pH or D. O. = 1 byte).
Level Data:	Level readings are stored as a 16-bit number representing 1/10,000 meter. (0.0394 inch); effective range is 0–65279 meters.
Ultrasonic Level Sensor	
Dimensions:	4 7/8" diameter × 8½" long (12.2 × 21.6 cm).
Weight:	3 lb, (including amplifier box and cable) (1.4 kg).
Body Material:	Xenoy® 6120 housing, stainless steel.
Cable Length:	25 ft. (7.6 m). PVC Jacket
Operating Temperature:	–13° to 140°F (–25° to 60°C).
Storage Temperature:	–40°to 158°F (–40° to 70°C).
Level Measurement Specifications	
Measurement Range:	Minimum: 2 ft. (0.3 m) from sensor to liquid surface. Maximum 12 ft. (3.6 m) from sensor to liquid at minimum level
Measurement Accuracy:	2 ft. (0.6 m) or less: ±0.02 ft. at 72°F (22°C). 2 to 12 ft. (0.6-3.6 m): ±0.03 ft. at 72°F (22°C)
Maximum Temperature Error Over Compensated Temperature Range:	±0.000085 × D per degree C ±0.000047 × D per degree F (Where "D" is the distance from the transducer to the liquid surface.)
Beam Angle:	8 degrees.
Level Resolution:	0.004 ft. (0.12 cm).
Optional:	Extension cable of 25 ft. (7.6 m) Custom lengths available by special order. Maximum distance is 1,000 ft. (304.8 m) if unit is AC-powered; 250 ft.(76.2 m) if unit is battery-powered.
Miscellaneous	
Flow Rate Calculations:	The flow meter creates a table of level-versus-flow rate from program selections; this table divides the level span into 256 equally-spaced level increments. Each level increment corresponds to a specific flow rate. During data collection, if the measured level falls between two table values, the flow meter will perform a linear interpolation to calculate the flow rate value.

Xenoy®, Registered trademark of G. E. Plastics, division of General Electric.

Table 4: Model 4210 Chart Longevity at Various Speeds

NOTE: Report Generator is turned off.

Chart Speed, Inch/Hour	Time to Empty Roll
4	195 Hours (8⅛ Days)
2	16¼ Days
1	32½ Days
0.5	65 Days

Table 5: Battery Life Expectancy at Various Settings

Flow Meter Settings	Minimum	Default[2]	Maximum
Reading Interval	5 Minutes	30 Seconds	Continuous
Printer	Off	Off	4" per Hour
Report Generator	Off	Off	Every Hour
Average Current	12 mA	40 mA	125 mA
Nickel-Cadmium[3]	12.5 Days[5]	3.7 Days	1.2 Days
Lead-Acid[4]	20.3 Days	6 Days	1.9 Days

Notes

1. These figures are approximations based on calculations; actual times for your flow meter may vary due to factors of battery age, charge condition, operating temperatures, and component differences. "Minimum" settings are those providing the lowest average current draw. "Maximum" settings are those requiring the highest current draw. Your program should draw somewhere between the two.
2. The default settings are the program entered at the factory. You can reset the flow meter to the default program at any time by pressing the 1 and CLEAR ENTRY keys at the same time.
3. The nickel-cadmium battery has a capacity of 4.0 ampere-hours at 20° C.
4. The lead-acid battery has a capacity of 6.5 ampere-hours at 20° C. (Both batteries are assumed to be fully-charged with at least 95% of rated capacity and in good condition. These calculations also assume a 5% safety factor at the end of discharge. Lead-acid batteries should never be completely discharged.)
5. All fractional times are rounded down, rather than up.

6. How to Make Battery Calculations

To calculate battery life expectancy for an installation, you must know two things:

- The ***capacity*** of the battery you are using
- The ***average current draw*** of the flow meter or (other device) powered.

Battery capacity is expressed in **ampere-hours.** The battery manufacturer provides this information for each battery. This value is the product of a load current times an arbitrary time period, ten hours for nickel-cadmium batteries, and twenty hours for lead-acid types. The terminal voltage of the battery at the end of this time period is the discharged cell voltage, 10 volts for nickel-cadmium and 10.5 volts for lead-acid types. Note that batteries are fully discharged well before the terminal voltage drops to zero volts.

Isco batteries are rated at 4 **ampere-hours** for the nickel-cadmium and **6.5 ampere-hours** for lead-acid types. Convert the battery current capacity into milliamperes and then divide this figure by the average current drawn by the unit. This will give you a number in hours. Divide that figure by 24, and you will have the number of days.

Note that the published ampere-hour figures do not mean that you can expect to draw 4 amperes from the nickel-cadmium battery (or 6.5 amperes from the lead-acid battery) for one hour. At the one-hour rate, discharges are typically ***less than half*** the ten- or twenty-hour rate.

To convert ampere-hours to milliamperes, multiply by 1,000. ***Examples:***

4 ampere-hours × 1,000 = 4,000 mAh.

6.5 ampere-hours × 1,000 = 6,500 mAh.

If you divide this figure by the average current of

the flow meter, say **15 mA**, you will have:

4,000 ÷ 15 = 266.67 hours.

Divide this number by twenty-four to get days:

266.67 hours ÷ 24 = 11.1 days.

For considerations of safety, we suggest you subtract 10% from this number (100% – 5% for 95% capacity and 5% for a reserve at the end of discharge).

11.1 – 1.1 = 10 days

This is the battery expectancy for a nickel-cadmium battery with a 15 mA continuous average drain, with a 10% derating factor. You can use the same method to calculate for lead-acid batteries, except the current will be 6,500 mA, and the period correspondingly longer, in this case a little over 16 days. You can run the full number of days calculated without derating if your batteries are new and at 100% capacity, but you will leave yourself no safety factor if you are in error on either of these assumptions. Remember, if the battery fails, there will be a period of time during which no measurements will be taken, (and no data stored, if you are also using FLOWLINK®software).

Batteries lose capacity as they age. Capacity also drops off as temperature falls. Low temperatures make less capacity available due to the slowing of the chemical reactions, while high temperatures accelerate the deterioration of battery plate separators, particularly if they are aged. Note also that nickel-cadmium batteries show fairly rapid rates of self-discharge. A battery that is fully charged and then placed in storage will lose some capacity each day. In a week, this could easily be 5% or more.

When using lead-acid batteries, you must be careful to avoid complete discharge, as this may cause cell reversal, which will ruin the battery. Also, complete discharge in low temperature ambients may cause the battery to freeze, which can deform the plates or even crack the case. Always operate these batteries with a reserve factor!

Calculating Current Draw

Calculating current draw for a Model 4210 Flow Meter is somewhat more difficult than calculating the battery capacity. You cannot simply measure the idle current of the unit unless the **printer** and **report generator** are turned off in the program. These functions require power periodically, but not all the time. If the figures given in the previous table are not satisfactory for your application, you can use the following procedure (shown in **Figure 6**) to measure the actual current draw.

NOTE

Do not attempt this procedure unless you have the proper equipment available and know how to make electrical measurements.

To measure current for a varying load requires a more-sophisticated type of multimeter, one that is capable of averaging high and low readings over a period of time. The ***Fluke®Model 87 Multimeter*** is one example of this type of meter. You should set the meter on **MIN/MAX** and let it run with your program for several hours or more. Other manufacturers' meters are also acceptable, but only if they are capable of **averaging current draw**. For a more representative test, the area-velocity sensor should be attached and submerged in water. You should run the test for at least **eight hours**, longer if necessary, or until the flow meter has exercised the entire program. The longer you run the test, the more accurate the average will be.

Figure 5. Measuring Flow Meter Current

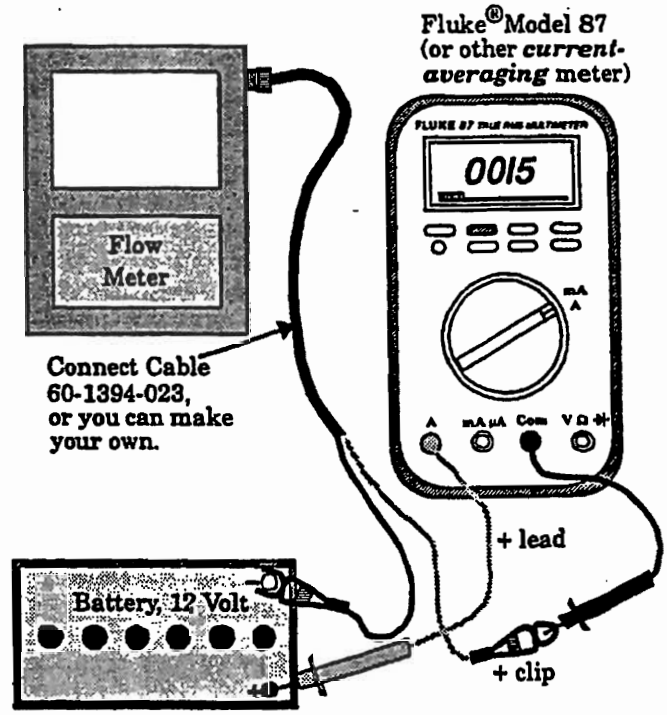

A good quality, adjustable, regulated DC power supply can be substituted for the 12-volt battery. The power supply should have at least 3 Amperes output, preferably more, and capable of overcurrent surges.

More information about batteries used to power Isco equipment is available from the Isco ***Power Products Guide***, which is shipped with this manual and any flow meter order.

CHAPTER 2

1. Programming the Flow Meter

Isco ships the flow meter with a program already installed called the ***default program***. You can use this program as an ***example*** to see the flow meter's capabilities. Note that the default program is just to test the unit at the factory. The flow meter's internal computer must always have something programmed into the unit, so that becomes the default program. Your flow situation will usually require other programming choices. The text provided with each screen explains the reasons for the various menu options.

Operation of the Keypad and Display

The display is a two-line, forty character-per-line liquid crystal (LCD). It has a backlight feature for easy viewing in low light situations. The display has three different operating modes, ***normal***, ***programming***, and ***messages***. In the ***normal mode***, the display shows such things as level, flow rate, total flow, parameter measurement, etc. In the ***programming mode***, the top line of the display shows each step as you work through the program while the bottom line shows the choices available for that step. In the ***message mode***, the display provides instructional information, such as how to leave programming, or what to do if you have entered a number that is out-of-range. Following is a "normal" display on the flow meter. This is typical of what the flow meter will display when it is in the normal operating mode and you are *not* programming it.

0000004.78 CF	1.13 FT	16-MAR-94
1.03 CFS	*(X X)*	8:25:37

An interpretation of the numbers on this display would be as follows: Time and date will be replaced by pH/D.O. and temperature if you are using parameter sensing. The *(X X)* to the right of the time indicates letters that may appear from time to time on the Model 4210 Flow Meter.

The letter **C** will appear when the flow meter is communicating with a remote computer (FLOW-LINK applications only). only). The letters **E** or **D** will appear (Enable or Disable) when the sampler enable function (step 6) is programmed by condition. (Programmed by condition means that the flow meter will enable the sampler only when a certain condition or set of conditions, sensed by the flow meter, are met.)

Total Flow	*Current Level*	*Date (or pH/D.O.)*
Flow Rate		*Time (temperature)*

Following is a typical programming display on the flow meter: (One of the items in the second line will be flashing. The item flashing is the selection currently held in memory.).

TOTALIZED VOLUME UNITS
• CF • • GAL • • M3 • • AF • • L • • MGAL •

Following is a typical display providing instructional information:

CHANGES HAVE BEEN MADE IN STEP
PRESS '0' TO CONTINUE, PRESS '1' TO DISCARD

NOTE

If you stop programming for more than two minutes, the flow meter will time out, and whatever is on the display, (message or program step) will revert to the "normal" display, shown previously.

The program consists of *steps* and *substeps*. The steps are listed on the flow meter front panel. Most steps contain several substeps. Generally, you need to complete all the substeps before stopping, or the flow meter will reject the changes you made for that step after it times out. There are some exceptions.

The flow meter keeps in memory any changes that you made for the finished steps (*all substeps completed before stopping*). Most steps *not* finished when you stop will return to the previous selection.

2. Keypad Functions

Programming is done on the flow meter's keypad with prompts from the display. The following sections describe the function of each key.

OFF and **ON** - These turn the flow meter off and on.

Go To Program Step - Pressing this key lets you go directly to a particular program step without passing through the all the steps of the entire program. The display will ask you to enter the number of the step you want to program. Enter the number by pressing one of the number keys. There are nine program steps, so numbers from one to nine are valid.

Exit Program - Press this key when you want to leave the programming mode and return to the normal operating mode.

Clear Entry - This key lets you return to the previous entry for a program step if you have changed the entry, but not yet pressed **Enter**.

Enter/Program Step - This key has two functions. One is to enter a program selection into the flow meter's memory (Enter). The other is to step

through the program (Program Step).

Print Program - Pressing this key will make the flow meter print out a complete list of the current program choices retained in memory.

Print Report - One function of the flow meter is to print reports of activity recorded on the flow meter at regular intervals. The contents of these reports are defined in step 1. If you set up the flow meter to generate these reports, you can have a report printed any time by pressing this key. The report will cover the time interval from the last scheduled report up to the time you press this key.

The flow meter will print the next report at the next scheduled time. Note that if power fails for five minutes or more, the flow meter will print a report when power is restored that will cover the interval between the last report and the time that the power failed. The next report will cover the time from the power failure to next scheduled report time.

Chart Advance - Pressing this key causes the paper chart to advance through the printer at the fastest possible speed. Nothing will be printed while you are holding this key.

Chart Reroll - It is possible to unroll the chart from the take-up roll on the flow meter by pulling it out with your hands. Pressing this key lets you rewind the chart onto the take-up roll.

Number keys - These keys let you enter numeric values into the flow meter when programming.

Decimal Point - This key lets you enter a decimal point into a numeric value when programming. On flow meters equipped with the optional modem only, you can use this character as a comma (delay) when entering dialout numbers.

Arrow keys - These keys, referred to as the **left** and **right arrow keys** let you select a programming option by moving across the menus shown on the second line of the display.

+/- key - This key lets you enter a plus or minus to a quantity entered. Its most common use is in entering values for the ***equation***, a method of flow conversion. On flow meters equipped with the optional modem only, you can use this character as a dash when entering dialout numbers.

3. Programming Procedure

Programming a Model 4210 Flow Meter is quite simple. All you need to do is press various keys on the keypad to select items from a menu appearing on the flow meter's display. To start programming, turn on the flow meter and wait for the display to settle. Then either press the **Enter/Program Step** key (generally referred to as **Enter**) or the **Go To Program Step** key.

The display will change to two lines of text; the first line describes the step you are programming and the second line shows the menu choices available. One of the choices shown will be flashing. The flashing indicates that this choice is the current one held in the flow meter's memory. If you are satisfied with this choice, just press **Enter**, and the flow meter will advance to the next step. If you want a different choice from the one flashing, you can move across the display by using the **left** and **right arrow** keys. Each time you press the **right arrow** key, the flashing selection will move one position to the right. This will continue until the flashing cursor is over the last display.

From time to time you will notice an ***arrow*** that points to the edge of the display. This indicates that additional choices are available beyond what you can see on the display. By continuing to press the **right arrow** key you can view these unseen menu options. After reaching the furthest option, the arrow will move to the ***left side*** of the display, indicating that there are options unseen to the left. These will be the options you started with. If you want to go back to one of them, use the **left arrow** key until the option you need reappears. When the desired selection is flashing, just press **Enter**. The display will then automatically advance to the next step of the program.

All of the program steps contain several "substeps" that must all be completed before you advance to the next program step. Other steps, like **Reset Totalizer** contain only a few substeps. Some steps will require the entry of a ***numeric value***. Program these steps by using the number and decimal keys to enter the appropriate value.

Note that it is possible to program the flow meter in the shop, rather than at the job site, with the exception of **step 3, Adjust Level/Parameters.** To set level you must make an accurate measurement of the level in the flow stream and then enter that value. This can only be done at the job site.

If you are programming the flow meter for the first time, press **Enter**, start with step 1, and go on from there. If the flow meter has been in use and you need to change only part of the program, you would more likely use the **Go To Program Step** key. With this key you can go directly to the program step you need to change, which saves time.

If you change an entry and do not like it you can make the display revert to the original entry by pressing **Clear Entry**. If you have already pressed **Enter**, however, the new value will be in memory. To change it, press **Exit Program**. If you are in the middle of a program step with multiple substeps the flow meter will display, "Changes have been made in step; press 0 to continue or 1 to discard." If

you press 1, the display will return to normal and the last step you were working on will revert to its previous selection. (Any program step you completely change before exiting will remain changed.)

You can re-enter the program with either **Enter** or the **Go To Program Step** keys. If you become confused while programming, the best suggestion is to press **Exit Program** and start over. Also remember that you can have the flow meter print a complete list of your program choices by exiting the program and by pressing the **Print Program** key as soon as the display returns to the normal operating condition, displaying level and total flow, etc.

Programming Steps:

1. Operating Mode **2. Flow Conversion**
3. Adjust Level/Parameters
4. Reset Totalizer **5. Sampler Pacing**
6. Sampler Enable **7. Alarm Dialout**
8. Printer **9. Reports/History**

4. Description of Program Steps

Step 1 - Operating Mode

Step 1, Operating Mode, determines how you set up the flow meter. In this step there are two choices, ***Program*** and ***Setup***. ***Program*** advances you to step 2, and from there on you correlate the flow meter to the flow stream. ***Setup*** selects various basic "housekeeping" features for the flow meter. Here you determine the internal clock, site identification, measurement setup, *hysteresis* (see page 20), report contents, operation of the display backlight, and program lock. In ***Program*** you select the units of measure the flow meter will use for the display, calculations, and reports.

NOTE

If you choose NOT MEASURED for any selection, the flow meter will make **no further reference** to that value or function **for the rest of the program**, and you will **not** be able to activate that process or function later on unless you reprogram **step 1**.

If there is a feature or option you need that does not appear on your display when the manual says it should, return to **step 1** and make sure you have not inadvertently left it turned off in either the **Program** or **Setup** menus.

Note that selecting some features automatically excludes others. For example, selection of pH or D. O. excludes the other parameter, unless you use the **YSI 600 Multi-Parameter Sonde**, which measures pH, D.O., and conductivity at the same time.

This method keeps program size manageable and makes programming more efficient. By turning off unneeded features of the program early, you do not have to keep de-selecting those features over and over as you work through the program.

Consequently, you should choose carefully from the first step. We suggest you **study** the program first, then **fill out** the ***Programming Worksheets*** (in the back of the manual), and **program** the flow meter **last**, if you are unfamiliar with the unit.

Step 2 - Flow Conversion Type

Step 2, Flow Conversion Type, determines how the flow meter calculates flow rate and total flow. For the Model 4210, flow rate is calculated by knowing the measured level and (usually) the characteristics of a ***primary measuring device.***

A primary measuring device is a structure placed in a flow stream through which the entire stream must flow. These devices are made in a number of styles and sizes, but they all have one thing in common: For any type of primary measuring device there is a known relationship between the level in the flow stream ahead of the device and flow rate through the device. Consequently, after you measure level with the flow meter, it can calculate flow rate and total flow from the measured level, by consulting built-in look-up tables.

Detailed information about many commonly-used primary measuring devices is provided in the ***Isco Open Channel Flow Measurement Handbook.*** This useful book provides formulas, flow rates at various levels, and values for maximum head, as well as much interesting descriptive material. This book is available from Isco, upon request, with each flow meter. If your installation uses a nonstandard primary device, you should consult the manufacturer of the device for flow rates at given levels. The flow meter will then calculate a flow conversion for such a device on the basis of the manufacturers' data you enter as **data points** or an equation. In some instances, a nonstandard primary device could be supplied with a flow equation; you can enter that equation into the flow meter and the flow meter will calculate the flow rate from that equation.

Flow Calculations Without Primary Devices

Note however, that it is not always necessary to have a primary measuring device. The Model 4210 Flow Meter can measure level and calculate flow **without** having any primary device installed in the flow stream. Sometimes the shape of the flow stream itself forms the primary device. The **Manning** formula uses the shape of a pipe or channel and its slope to calculate flow in open (non-pressurized) pipe situations.

The conversion types available are WEIR/FLUME, MANNING, DATA POINTS, and EQUATION.

Use **Weir/Flume flow conversion** when your primary measuring device is a **weir** or a **flume**. A **weir** is a wall or dam across the flow stream. Water must rise to the point where it flows over the top of the wall. The measured level upstream behind the wall is used to calculate the flow rate. **Flumes** differ from weirs in that there is no wall or barrier, but instead a restriction, typically a sharp narrowing or change in the slope of the channel that restricts the flow. Again, the measured level of the stream at some point ahead of the restriction is used by the flow meter to calculate flow. In this flow conversion mode, the flow meter uses internal look-up tables for many common primary measuring devices.

An **Equation** is used when you have a non-standard primary device, or want to use different values from those programmed into the look-up tables of the flow meter. **Equation** flow conversion uses the standard flow equation:

$$Q = k_1H^{P1} + k_2H^{P2}$$

...where **Q** equals flow rate; k_1 and k_2 are constants; **H** is level (or head), and ^{P1} and ^{P2} are the powers to which the two **H** terms are raised. (Your equation may not have the second term, in which case you would enter 0 for the second constant, k_2.) Most common primary devices are supported in the flow meter's software, so generally you will not need this option. But it is available for those needing to enter their own values, or for those who have a non-standard primary device for which an equation can correlate level and flow.

MANNING **Flow Conversion** uses the **Manning formula** to calculate flow in open or closed (nonpressurized) gravity-flow situations based on slope, diameter, and roughness of the pipe. The Manning formula is named for its developer, Robert Manning, a 19th-century Irish civil engineer. There is no primary measuring device as such. Instead the pipe, with considerations for its slope and internal roughness, serves as the primary device. The Model 4210 can calculate flow in round pipes, rectangular, U-shaped, or trapezoidal channels based on this formula.

Data Point Flow Conversion (DATA POINTS) calculates flow based on a set of **user-entered data points** for a flow stream. Data consist of correlated level and flow measurements for the stream. Like the **Equation** method of flow conversion, this flow conversion is most commonly used where the primary measuring device is nonstandard, but where tables of level and flow rate data are available from the device manufacturer. The Model 4210 has space for four sets of data with as many as fifty points per set. The flow meter then calculates flow from these data tables using a three-point interpolation.

Step 3 - Adjust Level, Parameters

Adjust Level, Parameters calibrates the measuring sensors that provide the flow meter with level and other information. In this step you set the level that the flow meter measures. First you measure, as accurately as possible, the level in the flow stream. Then you enter this value with the numeric keys. Accuracy is important. Remember that measured level provides the basis for calculated flow in the flow meter.

The flow meter also has an input port for measurements other than level. This is the **Parameter Port**. Here you can sense such variables in the flow stream as temperature, pH (the acidity or alkalinity of a solution) and D.O. (dissolved oxygen) in the flow stream. You can have either pH with temperature, D.O. with temperature, or temperature alone. The port is not dedicated to a particular sensor, except through programming. You can change the sensor. For example, you can change from a pH probe to a D.O. sensor if you change the programming. Selection of one parameter will keep the other from showing up on the menus. Note, however, that it is possible to measure several different stream conditions (including pH and D.O.) at the same time with the **YSI 600 Sonde**.

The YSI 600 Sonde

The YSI 600 Sonde is a multi-purpose, water quality measurement device. It is intended for use in research, assessment, and regulatory compliance. The sonde attaches to the modified RAIN GAUGE connector on the Model 4210. Flow meters having only a 4-pin rain gauge connector will not support the YSI Sonde. If you wish to upgrade your flow meter to use this system, contact the factory. Note that you can have both the YSI 600 Sonde and the Rain Gauge connected to the flow meter at the same time by using a special Y-connect cable.

Figure 6. The YSI 600 Sonde

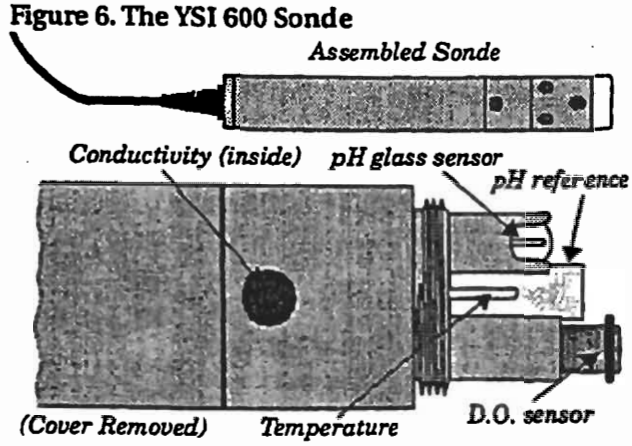

The YSI 600 can measure the following water qualities: ***dissolved oxygen (D.O.), conductivity, temperature,*** and ***pH***. Conductivity measurements made by the sonde can be used to calculate specific

conductivity, salinity, and total dissolved solids. A brief description and specifications for the YSI 600 are printed in **Chapter 4 (Accessories)**. You may also contact the factory or your Isco representative. More information on the sonde is found in the YSI 600 Manual, shipped with each YSI 600 Sonde.

Step 4 - Reset Totalizer

This step decides whether you reset the flow meter's internal flow totalizers. If the installation is permanent you generally won't reset the totalizer. If you are using the flow meter as a portable recording unit and are moving it from one site to another, you would generally reset the totalizer between sites.

Step 5 - Sampler Pacing

It is common to use a flow meter with an Isco Automatic Wastewater Sampler. Typically the flow meter signals the sampler to take a sample after a certain volume has passed. It might also occur after a certain condition or set of conditions has either changed or been met. This step allows you to determine that control. There are several possible options—DISABLE, CONDITIONAL, VOLUME, and FLOWLINK. DISABLE will keep the sampler from receiving a flow pulse from the flow meter. VOLUME allows the flow meter to signal the sampler whenever a specific flow volume has passed by. FLOWLINK ***(this option will only appear if you are using FLOWLINK software)***, allows the sampler to be signalled from the flow meter as a result of conditions determined by FLOWLINK.

FLOWLINK is Isco's proprietary data acquisition and management software. FLOWLINK works with personal computers, modems, and laptop computers to monitor flow meters from a distance. Consult the factory for more details about FLOWLINK.

VOLUME causes the flow meter to pace the sampler after a specific volume has passed through the flow stream.

CONDITIONAL allows pacing of the sampler by the flow meter when a condition has been met, or has changed. Among these conditions are changes in level, flow rate, temperature, rainfall, (if you are using the rain gauge), dissolved oxygen, or pH. You can also use a combination of conditions. D.O. (dissolved oxygen), or pH, or if you are using the YSI 600 sonde, you can select multiple conditions from its sensors.

NOTE

If you choose CONDITIONAL for sampler pacing and it doesn't seem to work properly for you, read the section on hysteresis (page 20). Then check the hysteresis setpoints for your conditions. (The defaults are all zero.)

Note also that you must have the appropriate sensors attached to the flow meter to measure temperature, D.O., pH, conductivity, *etc.*; the flow meter cannot do this by itself, nor does it occur automatically.

Step 6 - Sampler Enable

Sampler Enable means that in a combination flow meter/sampler pair, the flow meter controls the sampler's ability to run its own program. The difference between **step 5, sampler pacing**, and **step 6, sampler enable** is that in sampler pacing, the flow meter merely sends flow pulses to the sampler from time to time. The sampler counts these flow pulses to determine when to take a sample (according to its own programming).

With sampler pacing, the sampler is always enabled. With sampler enabling, the flow meter can actually stop operation of the sampler. The sampler is still set up to run its own program, but the inhibit/enable line from the flow meter will determine when and whether the sampler runs its program. This feature is useful for storm water runoff monitoring applications, where it may be necessary for the flow meter/sampler pair to have to wait a long time between storm intervals.

Again, changing or meeting a condition or set of conditions triggers the enabling. The conditions that can be used for sampler enabling are similar to those used for sampler pacing: level, flow rate, rainfall, temperature, dissolved oxygen, pH, or a combination of these conditions. The YSI 600 Sonde provides several measurements at the same time. (You must have the appropriate sensors for rainfall, temperature, D. O., pH and the YSI outputs.)

Step 7 - Alarm Dialout Mode

This feature allows you to program a Model 4210 Flow Meter to signal a remote location through a telephone line. This feature is useful for transmitting alarm conditions or other essential information to a remote location.

NOTE

You must have the optional modem installed to make use of this program step. The menus will not even appear unless the flow meter has a modem installed.

The Alarm Dialout feature is useful if you need to signal a remote location when there is a change of condition in the flow stream that could constitute an alarm. You can program as many as five different eighteen-digit telephone numbers into the flow meter in decreasing order of importance. The modem is capable of speech.

DISABLE inhibits this function altogether. CONDITIONAL lets you program the flow meter to signal

these alarms for a variety of reasons. You can use rainfall, time, level, flow rate, dissolved oxygen, pH, rate-of-change, a combination of conditions, or define the operation through FLOWLINK software from another computer. STORM lets you set the alarm through a combination of rainfall and time. You can also program the interval between calls and set up the system to reset the alarm condition by dialing back from the remote telephone.

Step 8 - Printer

All Model 4210 Flow Meters have a built-in printer. The printer is more than just a printer, as it is capable of plotting linear data along with printing alphanumeric (letters and numbers) messages. In this step you set the speed for the chart to advance, from ½" to 4" per hour.

Chart speed is set according to the amount of resolution you want to see on the chart. If there is a great deal of activity on the chart, you would generally choose a faster speed so the marks are more "spread out" and are easier to interpret. If there is little activity on the chart and you want the flow meter to run for long periods without having to change the roll, you would pick a slower speed.

The flow meter is capable of plotting three separate data lines on the chart in addition to the alphanumeric messages. These lines may indicate such things as level, flow rate, pH, dissolved oxygen, or temperature. Note that you must have the appropriate sensors for pH, DO, and temperature to take advantage of the availability of these plots.

The printer is capable of plotting over-ranges for the data lines it plots. You can tell when the printer is in over-range if a data line goes off the chart on the right side and then immediately starts over again plotting on the left side.

Step 9 - Reports/History

This step lets you program the flow meter to print regular reports on the internal printer. The reports the flow meter prints are a summary of activity recorded over time. Typically included are such items as maximum and minimum flow rates, the time they were reached, sample records, etc.

The flow meter lets you create two separate reports, and define what appears on them to a great extent. Note that the contents of the reports are defined in **Setup** in step 1. Step 9 merely lets you turn them off and on and set the timing. You can define the start time, the interval between reports and other aspects of the report.

History provides a record of changes made to the flow meter's program or operation events. As many as 50 changes can be stored in the flow meter's memory at a time. The memory can store up to 50 history items and 200 sample events at a time.

5. Interpreting The Program Screens

Following are the program screens as they appear on the display of a Model 4210 Flow Meter. Explanations for most of the screens will be provided.

IMPORTANT NOTE

Some items that appear in the following menus will have parentheses (...) around them. This means that the item *may* or *may not* appear on your flow meter.

Choices made early in the program can make some options unavailable later.

An example of this is the pH/D.O. option. Selection of one in ***Step 1*** will keep the other from appearing in all subsequent menus.

- ***Some of the diagnostic and error screens will be covered in Chapter 5.***

6. Step 1 - Operating Mode

Turn on the machine. Wait for the display to settle. Then press the **Enter/Program Step (Enter)** key. The following will appear. (Step 1) If the following menu does not appear, press **Exit Program**, then **Go To Program Step**, then press **1**.

```
SELECT OPTION
• PROGRAM • • SETUP •
```

PROGRAM is always the default. If you press **Enter**, the display will automatically advance to the next screen, which will ask you to select units of measurement. If you select SETUP, the following will appear:

```
SETUP OPTIONS: 'EXIT' TO QUIT
• SET CLOCK • • SITE ID • • MEASUREMENT SETUP •
```

If you press the **right arrow** key, the following options will appear on the display:

```
SETUP OPTIONS: 'EXIT' TO QUIT
• STATUS ENABLE/ALARM HYSTERESIS •
```

Then:

```
SETUP OPTIONS: 'EXIT' TO QUIT
• OPTIONAL OUTPUTS • • REPORT SETUP •
```

And:

```
SETUP OPTIONS: 'EXIT' TO QUIT
• LCD BACKLIGHT • • (LANGUAGE) • • PROGRAM LOCK •
```

Finally:

```
SETUP OPTIONS: 'EXIT' TO QUIT
• (LANGUAGE) • • PROGRAM LOCK • • PROGRAM •
```

If you select SET CLOCK, the following will appear:

```
YEAR MONTH DAY HOUR MIN
 XXXX  XX   XX  XX  XX
```

Enter the year (four digits), the month (01-12), the day (01-31), the hour (01-24), and the minute (01-59).

If you select SITE ID, the following will appear:

```
SITE ID: XXX
```

You can select any suitable three-digit number for the site identification.

If you select MEASUREMENT SETUP, the following will appear. You will have to use the right arrow key to bring all the options on screen:

```
MEASUREMENT SETUP
• LEVEL READING INTERVAL • • DO/PH READING INT-
```

```
MEASUREMENT SETUP
• DO/PH READING INTERVAL • • VARIABLE BLANKING •
```

LEVEL READING INTERVAL refers to how often the flow meter takes a level reading. LEVEL refers to the level in the flow stream.

DO/PH READING INTERVAL refers to the measurement of specific aspects of the flow stream other than amount. The Model 4210 supports measurement of three different characteristics: **temperature, pH** (the relative acidity or alkalinity of a solution), and **D.O.**, dissolved oxygen.

```
MEASUREMENT SETUP
• VARIABLE BLANKING • • YSI 600 READING INTERVAL •
```

VARIABLE BLANKING refers to the ability of the flow meter to ignore certain measurements of the ultrasonic transducer to reduce the possibility of error.

YSI 600 READING INTERVAL refers to the frequency of measurements made by the YSI 600 Sonde.

If you select LEVEL READING INTERVAL, the following will appear:

```
LEVEL READING INTERVAL
•CONTINUOUS••15 SEC••30 SEC••1 MIN••2 MIN••5 MIN•
```

The LEVEL READING INTERVAL option is a way to conserve power in battery-powered installations. If your installation is AC-powered, you can simply select CONTINUOUS.

- *The Model 4210, expends considerable power generating the ultrasonic pulses.*

With this unit, select the longest acceptable interval between readings, if you are operating on battery power. If you need a faster response time, select one of the shorter intervals. If you are operating on battery power, you may have to seek a compromise between short reading intervals and battery life expectancy.

Select VARIABLE BLANKING and the following will appear:

```
VARIABLE BLANKING
DISTANCE = XX.XX FT (or meters)
```

You can determine this distance approximately by measuring from the face of the (installed) ultrasonic level sensor to the surfaces of the channel just above the maximum expected liquid level. This value tells the flow meter to ***ignore*** any echo reflected from this distance or less.

The purpose of this selection is to let you fine-tune the reflection cone beneath the ultrasonic level sensor. If the level sensor is mounted too high above the flow stream, there is a good chance echoes will be reflected from the channel walls, tops, sides, or other solid surfaces, that have nothing to do with the actual liquid level. Proper selection of a value here will ensure that echoes selected by the flow meter as valid will only come from the surface of the flow stream, not the walls of the channel.

If you select DO/PH READING INTERVAL, the following will appear:

```
DO/PH READING INTERVAL
•CONTINUOUS• •15 SEC• •30 SEC• •1 MIN• •2 MIN• •5 MIN•
```

Again, this selection is offered as a means of saving battery power. After selecting the appropriate parameter reading interval, press **Enter**.

This time, select YSI 600 READING INTERVAL from the menu. The following display will appear:

```
YSI 600 READING INTERVAL
•CONTINUOUS••15 SEC••30 SEC••1 MIN••2 MIN••5 MIN•
```

YSI 600 READING INTERVAL refers to the YSI 600 Sonde. The flow meter can measure several different aspects of the stream at the same time, including pH, D.O., temperature, plus conductivity.

NOTE

If you are using the Isco D.O. sensor or are sensing D.O. with the YSI 600 Sonde, select as long a measurement interval as is practical for your application. The reasoning is that the D.O. sensor is turned off between measurement intervals and this turned-off period prolongs the life of the sensor.

The ***Setup*** menu will reappear. This time select STATUS from the ***Setup*** menu. Press **Enter**. The following will appear:

```
MODEL 4210 HW REV: XXXXXX SW REV X.XX
ID XXXXXXXXXXXX
```

HW REV refers to the hardware revision number.

SW REV refers to the software revision number.

ID is an internal identification number.

Press **Enter** again and you will see the following:

```
SIGNAL STRENGTH X%
```

The flow meter will read continuously when this

screen is displayed. This value indicates the functioning of the ultrasonic sensor. This display exists primarily as a diagnostic tool for telephone troubleshooting. There is no "magic" number you should expect to see. If the flow meter is displaying valid level/flow readings, you do not need to worry about the numbers. The numbers become important when you ***cannot*** get valid level readings. If there is a number greater than zero displayed for ***signal strength***, the following is generally indicated:

1 = a very weak return signal; 100 = a very strong return signal. Numbers from 10 to 90 are normal, and numbers of 50 to 90 are typical for sewers.

The important thing to remember when interpreting this number is:

- *Is the number fairly consistent from one reading to the next?*

This number indicates the strength of the ultrasonic return echo. A number of 1 indicates a very weak return echo. A number of 100 indicates a very strong return echo; generally speaking, the higher the number the better. Typical values will range from 30 to 100. Again, this number is important only:

- *If you doubt the accuracy of the reading, or*
- *If the value itself is unstable from one reading interval to the next.*

If you press **Enter** again, the flow meter will display the system voltage:

SUPPLY VOLTAGE: *XX.X*

This value should be from 10.5 to 13.5 (volts DC). Note that if you do not press **Enter** after the first diagnostic menu appears, the flow meter will automatically advance the display through the next two screens and finally revert to the ***Setup*** menu after a short timeout.

YSI SOFTWARE REV: *XX.X*

Return to the ***Setup*** menu if the unit has not already done so. This time select ENABLE/ALARM HYSTERESIS from the menu. Press Enter. The following will appear:

LEVEL ENABLE/ALARM HYSTERESIS *X.XXX FT (or meters)*

The HYSTERESIS menu lets you set the range over which the level (or other condition) can vary before the flow meter responds to the change.

In the PROGRAM section of the software there are several steps that require a ***change in a condition*** to make the flow meter carry out certain actions. For example, **step 6** programs the flow meter to enable (activate) a sampler. In that step, you select a condition (or set of conditions) that must occur before the sampler is enabled. You enter a value (level is an example) that must be me before the enabling occurs.

But what if this value is met and then falls away? It is possible for a condition to vary rapidly over a narrow range. Without hysteresis, the flow meter will turn the sampler off and on repeatedly, causing a condition known as **chattering**, that would result in very erratic operation of the sampler.

With hysteresis, you can enter a value that will keep the flow meter from responding to insignificant changes in the enabling condition. You should select a value for hysteresis that is narrow enough to allow the flow meter to respond to any serious change, but broad enough to ignore minor changes that could cause chattering. Press **Enter** and the following will appear:

FLOW RATE ENABLE/ALARM HYSTERESIS *X.XXX* CFS *(or other units of measure)*

The next several menus may or may not appear, depending on selections you make in ***Program***. They concern alarm/enable hysteresis set points for parameter sensing—temperature, pH, and D.O.

If you want to set hysteresis for any of these items, you should enable them when you work through the program section, then re-enter the ***Setup*** sectior (Hysteresis) and they will appear. Note that you ca have temperature alone, or temperature with eithe pH or D. O. You ***must*** have temperature with either pH or D. O.

NOTE

You cannot have pH and D.O. at the same time unless you use the YSI sonde. Selection of one will prevent the other from appearing on the menus later.

The following will appear if you are measuring temperature:

TEMPERATURE ENABLE/ALARM HYSTERESIS *XX.XXX* DEG F *(or C)*

The following will appear if you are measuring pH:

pH ENABLE/ALARM HYSTERESIS *X.XXX* pH

The following will appear if you are measuring D. O:

DO ENABLE/ALARM HYSTERESIS *X.XXX* PPM

(or mg/l depending on units selected in **Program**.)

A set of menus similar to those shown above for pH, D.O., and temperature will then appear for the YSI 600 Sonde, if you have selected it. You can se hysteresis for YSI-pH, YSI-D.O., YSI-Conductivit and YSI-temperature, if these parameters have

been turned on in previous program selections.

After all the HYSTERESIS menus have been set, press **Enter**. The display will return to the ***Setup*** menu. This time select OPTIONAL OUTPUTS with the arrow key. Press **Enter**.

OPTIONAL OUTPUTS • ANALOG OUTPUT • • SERIAL OUTPUT • • ALARM BOX •

ALARM BOX refers to an external accessory used to signal alarms from the flow meter. See **Chapter 4** for more information about the High-Low Alarm Box. Note that choice of SERIAL OUTPUT will eliminate ALARM BOX as an option. Likewise, choice of ALARM BOX will eliminate SERIAL OUTPUT as an option.

If you select any of these OPTIONAL OUTPUTS, the flow meter will request that you turn them on or off. If you are running on battery, select **OFF** for all unused outputs.

ANALOG OUTPUT refers to the flow meter's capability of managing associated equipment through a 4-20 mA current loop. The 4-20 mA current loop is a common method used to control industrial processes that are variable (rather than just fully off or on). At the lower value (4 mA) the control is turned off (0%); at 20 mA the control is completely turned on (100%). In between, rates range from 1 to 99%. A typical application is a chlorinator, which must vary in application of the chlorine gas as the amount of water passing through the system increases or decreases. Current ranges other than 4-20 mA are also in use, although they are less common than 4 - 20 mA. Examples are 0-20 mA (supported by the flow meter on the internal card only) and for longer current loops, 10-50 mA (not supported by the flow meter).

Isco offers two different arrangements for the 4-20 mA control circuit. You can have either or both with the same flow meter. One arrangement requires the use of an external accessory, the ***4-20 mA Output Interface*** (see **Chapter 4**). This module connects to the flow meter and a source of AC power and contains the circuitry necessary to create the 4-20 mA current loop. This accessory connects to the flow meter through the **Interrogator** connector.

The other 4-20 mA option is a board installed inside the flow meter that contains circuitry for up to three separate, isolated 4-20 mA current loops. This option can also be ordered with one or two current loops supplied. If you use both the external converter and the internal board, you can have a total of four current loops controlled by the same flow meter. The internal current loops are brought out to a 6-pin M/S connector in the slot where the **Modem** connector is usually mounted. Additional information for the internal analog output board, including specifications for the loops, is found in **Chapter 4**.

CAUTION

Each 4-20 mA output represents a constant drain on the flow meter' of at least 16 mA whether t activated or not. While 4-20 mA applications are generally made in installations with commercial power available, Isco suggests the following for those who have a 4-20 mA output in a battery-powered installation.

Use with battery powered flow meters only:

1. *If the battery is continuously on charge (for example with a Solar Panel Battery Charger)*
2. *If the battery is very large, such as a deep-cycle or marine type battery, or an Isco 35 Ampere-hour lead-acid battery.*
3. *Use only one 4 - 20 mA output.*
4. *Keep in mind that programming choices also affect power consumption. Use "minimum" settings on the flow meter wherever possible. (See **Chapter 1, Table 5.**)*

*Even with these circumstances, you may expect significantly shorter charge life from your battery. To determine the effect of this extra current draw on battery life, please refer to the section **How to Make Battery Calculations**, at the end of **Chapter 1**.*

The following menus determine the behavior of the 4 -20 mA current outputs. If you select ANALOG OUTPUT (another term for the 4-20 mA Output) and the flow meter is equipped with the optional internal board or the 4-20 mA external accessory has been turned on, RANGE, SMOOTHING, and MANUAL CONTROL will appear:

ANALOG OUTPUT • EXTERNAL 4-20 MA • • (RANGE) • • (SMOOTHING) • •

NOTE

If you know for certain that you have the proper installed hardware for internal 4-20 mA outputs and you do not see the proper displays, return to the "normal" flow meter display and press 4 - 2 - 0.

CAUTION

*If you do not have the proper hardware installed and you press 4 - 2 - 0 and the number of analog outputs is **not** zero, the external 4-20 mA converter will not work properly. If this occurs return to the 4 - 2 - 0 option, and at the prompt, enter 0 for the number of outputs activated. This will restore the external 4 - 20 mA converter capability.*

MANUAL CONTROL will appear if you continue moving to the right. "RANGE" will appear with the ANALOG OUTPUT menu if the optional internal 4-20 mA converter is present in the flow meter. If you select

RANGE, the following will appear:

OUTPUT RANGE • 0 - 20 mA • • 4 - 20 mA •

This menu lets you select the current value for zero-percent (baseline) compatible with your equipment (internal 4-20 mA board only).

If you select SMOOTHING from the ANALOG OUTPUT menu the following will appear:

SMOOTHING • NONE • • 15 SEC • • 30 SEC • • 1 MIN •

The SMOOTHING option lets you stabilize operation of the outputs by preventing a rapid reaction to sudden sharp changes in the condition being monitored that quickly return to normal (transients). Selection of a smoothing interval will prevent the equipment controlled by the 4 - 20 mA loop from reacting too quickly, too much, or operating erratically. A low-pass filter algorithm is incorporated in the software.

If you select the MANUAL CONTROL option from the ANALOG OUTPUT menu the following will appear:

MANUAL CONTROL (OUTPUT 0 = EXTERNAL) OUTPUT 0 = 0.0 MA

This option lets you control the operation of a 4-20 mA loop to check the operation of equipment controlled by the loop at any level from 0 to 100%. After connecting a 4-20 mA output to a controlled device, you can program the flow meter to put a specified current on a specific analog output. If you are using the external 4-20 mA converter, the Analog Output number will be zero.

NOTE

Selecting the MANUAL CONTROL option and programming any one of the ports will prevent the values transmitted by the other active 4-20 mA ports from being updated until the test is completed. The other ports will continue to transmit whatever value they held at the start of the test. Exiting from the MANUAL CONTROL menu at the end of the test will return all active 4-20 mA ports to normal operation.

Programming for the conditions and values that determine the operation of the 4 - 20 mA loop (or loops) is done in **step 2.**

NOTE

The information in the following section is provided for those who can write their own software programs to process the data transmitted from the Serial Output port. Special cables may be required. Contact Isco technical support for more information.

Returning to the OPTIONAL OUTPUTS menu, you will see the SERIAL OUTPUT option. This feature lets the flow meter transmit the most recent values for all currently enabled ports as ASCII text. You can then write a simple program to retrieve this data periodically, or you can do it interactively using a terminal program.

Command Line: (Use the INTERROGATOR connector.) The lines of text contain the port values for each port that is turned on. The DATA command will use a special command response protocol. The following table provides the ASCII codes for port types and standard units of measure.

Table 6: ASCII OUTPUT CODES

Code	Parameter	Units
DE	Description	String
ID	Unit specific identifier	Unsigned long
MO	Model	String
TI	Time since 1900	Days
BV	Battery Voltage	Volts
LE	Level	Meters
LSI	Level Signal Strength	0 - 100%
VE	Velocity	Meters per second
VSI	Velocity Signal Strength	0 - 100%
VSP	Velocity Spectrum Strength	0 - 100%
FL	Flow	Cubic meters per second
VO	Volume	Cubic meters
FV	Forward volume	Cubic meters
RV	Reverse volume	Cubic meters
SV	Sampler Enabled Volume	Cubic Meters
RA	Rain (rolls over every 255 tips)	Tips
CR	Current day's rain (tips since midnight)	Tips
PR	Previous day's rain (tips since midnight)	Tips
PH	pH	pH units
DO	Dissolved Oxygen	Milligrams per liter
TE	Temperature	Degrees Celsius
YPH	YSI 600 pH	pH units
YDO	YSI Dissolved Oxygen	Milligrams per liters
YCO	YSI 600 Conductivity	Millisiemens per centimeter
YSP	YSI 600 Specific Conductance	Millisiemens per centimeter
YSA	YSI 600 Salinity	Parts per thousand
YTD	YSI 600 Total Dissolved Solids	Milligrams per liter
YTE	YSI 600Temperature	Degrees Celsius
YSP	YSI 600 Specific Conductance	Millisiemens per centimeter
YCO	YSI 600 Conductance	Millisiemens per centimeter
YSA	YSI 600 Total Salinity	Parts per thousand
YTD	YSI 600 Total Dissolved Solids	Milligrams per liter
YTE	YSI 600 Sonde Temperature	Degrees Celsius
SS	Sampler Enable Status	Logical
B?	Bottle Number and Time	Days
CS	Check sum (does not include the check sum, carriage return, and line feed)	Unsigned long

Note: The output string for a given flow meter will have values only for those parameters it is currently measuring. The order of the fields in this table is subject to change. Additional data types may be inserted anywhere in the list. Parsing routines for this output string should search by type identifier instead of depending on the position in the string. If an active port has an error flag set, the serial output will insert ERROR for the value.

You can enter the command line by connecting the interrogator cable with the interrogator sense line shorted to ground. Then send a series of '?' (question marks) until the flow meter transmits the unit's banner and prompt. The number of question marks necessary is a function of the baud rate auto detection. At the prompt, enter DATA<CR> and the flow meter will respond with the appropriate ASCII output string. You can send the DATA command as often as you want. Type 'Q' to leave the command response interface.

In addition to the port values, the data includes the flow meter's current time, the bottle number and time stamp of the three most recent sample events, the previous day's rainfall total (midnight to midnight), the current day's rainfall total since midnight, and a rainfall tips counter that rolls over every 255 tips. (See **Rain Gauge**.) The port values appear in a comma-separated values format. Each data field is preceded by a two or three-character type identifier. The table lists the type identifiers. Note that the flow meter's current time and the sample event time stamp appear as a number in standard spreadsheet format (days since 1900). The supported baud rates are 9600, 4800, 2400, and 1200 (no parity, eight bits and one stop bit).

Periodic Output: (Use a special RAIN GAUGE connector cable—contact the factory for assistance.) Note that the periodic output will terminate during phone connection and when the interrogator cable is connected.

CAUTION

It is important to use CHECKSUM if you plan to use internal modems or the interrogator. The UART is shared with these devices.

If you select SERIAL OUTPUT from the OPTIONAL OUTPUTS menu, the following display will appear:

```
PERIODIC SERIAL OUTPUT
• ON • • OFF
```

Selection of OFF from this menu will disable this feature, and there will be no further references to it. The Serial Output data appears on the Interrogator connector of the flow meter. You should not use a standard interrogator cable for this application, as the sense line in the standard cable is shorted to ground.

Selection of ON from this menu will enable the feature and cause the following display to appear:

```
SELECT BAUD RATE (N81)
• 9600 • • 4800 • • 2400 • • 1200 •
```

After you select the appropriate baud rate, the program will advance to the following menu:

```
SERIAL OUTPUT INTERVAL
• 15 SEC • • 1 MIN • • 5 MIN • • 15 MIN •
```

This menu lets you select how often the flow meter transmits the ASCII text string.

Following is an example of a string showing all options: (Note that five lines are shown here; this is due to the confines of the text column. In actual practice, there are no carriage returns in the text string.)

DE, "Theresa Street", 4250 ALPHA 4,ID,0721577657,
MO,4250,TI,35317.343715,BV,12.3,LE,0.1000,VE,0.1225,FL,0.00
1555,VO,2.199325,FV,2.199325,RV,0.000000,SV,2.195539,SS,1,B0
,35317.307384,B0,35317.269907,B0,35317.232593,CS,10819

If you select any of these outputs, the flow meter will request that you turn them on or off. If you are running on battery and do not need these options, select OFF. Otherwise, select ON. After the OPTIONAL OUTPUTS menus have been set, press **Enter**. The display will return to the SETUP menu.

If you select any of these outputs, the flow meter will request that you turn them on or off. If you are running on battery and do not intend to use either of these options, select OFF. Otherwise, select ON. After the OPTIONAL OUTPUTS menus have been set, press Enter. The display will return to the SETUP menu.

This time, select REPORT SETUP with the **arrow key**. Press **Enter**:

```
REPORT SETUP
• REPORT A • • REPORT B •
```

This step lets you determine the contents of the reports generated by the flow meter. The flow meter's report generator is capable of creating two different reports (A and B) that can be identical or quite different. The reason for two reports is to allow the summary of events occurring over different time periods. For example you might generate report "A" weekly, and report "B" monthly. At this point, we are only interested in selecting the items the flow meter will include in each report. Press **Enter** and the following will appear:

```
REPORT SETUP
• FLOW • • DO/PH • • YSI 600 • • SAMPLE HISTORY •
```

FLOW METER HISTORY is just off the screen, to the right. If you select FLOW and press **Enter**, the following will appear:

```
LEVEL IN REPORT
• YES • • NO •
```

Select YES if you want LEVEL to appear in the report, then press **Enter**. The following will appear:

```
FLOW RATE IN REPORT
• YES • • NO •
```

Select YES if you want FLOW RATE to appear in the report, then press **Enter** again. Then:

```
RAINFALL IN REPORT
• YES • • NO •
```

Select YES if you want RAINFALL to appear in the

report. Note that you must have a rain gauge connected to the flow meter to sense rainfall occurrence. Press **Enter**. The following will appear:

```
REPORT SETUP
• FLOW • • DO/PH • • YSI 600 • • SAMPLE HISTORY •
```

FLOW METER HISTORY is off the screen to the right.

This time select DO/PH. Press **Enter**. The following will appear:

```
PH OR DO IN REPORT
• YES • • NO •
```

Select **YES** if you want DO/PH to appear in the report. Note that you must have the appropriate sensor connected to the flow meter. It is capable of sensing temperature, pH and temperature, and D.O. (dissolved oxygen) and temperature. Press **Enter**. The following will appear:

```
TEMPERATURE IN REPORT
• YES • • NO •
```

Select yes if you want TEMPERATURE to appear in the report. Press **Enter** again and the display will return to the REPORT SETUP menu:

```
REPORT SETUP
• FLOW • • DO/PH • • YSI 600 • • SAMPLE HISTORY •
```

FLOW METER HISTORY is just off the screen.

This time select YSI 600. The following will appear:

```
YSI DATA IN REPORT
• YES • • NO •
```

Press **Enter** again and the display will return to the REPORT SETUP menu.

```
REPORT SETUP
• FLOW • • DO/PH • • YSI 600 • • SAMPLE HISTORY •
```

This time select SAMPLE HISTORY. Press **Enter**. following will appear:

```
SAMPLE HISTORY IN REPORT
• YES • • NO •
```

Select YES if you want SAMPLE HISTORY to appear in the report. Press **Enter** again and the display will return to the REPORT SETUP menu:

```
REPORT SETUP
• DO/PH • • SAMPLE HISTORY • • FLOW METER HISTORY •
```

This time select FLOW METER HISTORY. Press **Enter**. The following will appear:

```
FLOW METER HISTORY IN REPORT
• YES • • NO •
```

Select yes if you want HISTORY to appear in the report. HISTORY is a list of the changes that have been made to the flow meter's program.

Press **Exit** to leave the program. Then press **Enter** and reselect SETUP. The *Setup* menu will reappear:

```
SETUP OPTIONS: 'EXIT' TO QUIT
• STATUS • • REPORT SETUP • • LCD BACKLIGHT •
```

SET CLOCK, SITE ID, MEASUREMENT SETUP, PROGRAM LOCK, PROGRAM are off-screen and can be accessed with the arrow keys.

Select LCD BACKLIGHT with the **arrow** key. Press **Enter**. The following will appear:

```
LCD BACKLIGHT MODE
• KEYPRESS TIMEOUT • • CONTINUOUS • • OFF •
```

KEYPRESS TIMEOUT will cause the backlight to be turned on whenever you press a key on the keypad (other than On and Off). An internal timer is started that will keep the backlight on for approximately two minutes after you press a key. Each time you press a key, the timer is restarted, so the backlight will never go off as long as you continue to program the flow meter, with keystrokes coming less than two minutes apart. At the end of programming, the backlight will go out, and will stay out until you start to program again. This feature is designed to conserve battery power by de-energizing the backlight when it is not needed. The backlight is still available if it is necessary to program in a dark environment, such as a manhole. We recommend using this selection if the flow meter is battery-powered, but installed in an environment where the lighting is poor.

CONTINUOUS will light the backlight continuously. Where the flow meter is powered by an AC power supply, battery life considerations do not intervene. If the backlight makes the display easier to read, use it. Do not use CONTINUOUS in any installation that is battery-powered, as it will cause rapid discharge of the battery.

OFF will keep the backlight feature turned off under all circumstances. Select this option for maximum battery life in installations where there is sufficient ambient light to read the display without the backlight feature. Press **Enter**. The SETUP menu will return. This time move the flashing cursor from LCD BACKLIGHT to LANGUAGE.

When LANGUAGE appears on your display, you may select an alternate language to program the flow meter. The other language depends on how the flow meter was ordered. The following display will appear:

```
LANGUAGE
• ENGLISH • • (second language, as ordered) •
```

Select the language appropriate for your application. The menus and the printed reports will appear in the selected language. Press **Enter**. The SETUP menu will reappear. This time select PROGRAM LOCK from the menu. Press **Enter**:

PROGRAM LOCK
• ON • • OFF •

PROGRAM LOCK keeps the program from being changed. Select OFF while you are programming, and then go back and select ON if you need to lock the program. At that, we suggest using the lock only if there are compelling security reasons. Further changes will require entry of the **password**, which is the model number for whatever flow meter you are using, for example **4210** for the Model 4210. If you select ON, there is a time-out before the lock engages. If you continue to work through the rest of the program, the lock will not engage until you are done. But if you stop programming longer than two minutes, the lock will engage, and you will not be able to make any further program changes.

Press **Enter** and the SETUP menu will reappear. **Step 1 - Program:**

SELECT OPTION
• PROGRAM • • SETUP •

PROGRAM will be flashing. (Note that PROGRAM is always the default choice. That is because you are more likely to need to make changes in the PROGRAM section of the software than in the SETUP section.)

NOTE

If you choose NOT MEASURED for any selection, the flow meter will make no further reference to that function for the rest of the program, and you will be unable to activate that function later. If there is a feature you need that does not appear when the manual says it should, return to **step 1** and make sure you have not accidentally left it turned off.

If you program a parameter value as a condition for sampler enabling, pacing, dialout, *etc.*, and then turn that parameter sensor off, the flow meter will also remove that condition from the program.

Consider all aspects of your program before you make any changes!

Press **Enter**. The following will appear:

UNITS OF LEVEL MEASUREMENT
• FT • • IN • • M • • MM • • NOT MEASURED •

Selection of feet, inches, meters or mm depends on your situation. You would select NOT MEASURED if you were using the flow meter for some other form of sensing only, such as pH, or temperature. Press **Enter**. The following will appear. You will have to press the **right arrow** key several times to see all of the options displayed below:

FLOW RATE UNITS OF MEASURE
• GPS • • GPM • • GPH • • MGD • • CFS • • CFM • • CF-

Pressing the **right arrow** key several times will move other units onto the display:

FLOW RATE UNITS OF MEASURE
• CFH • • CFD • • LPS • • M3S • • M3M • • M3H • • M3D • • AFD •

NOT MEASURED will also appear if you keep moving with the **right arrow** key. This step establishes the units of measure the flow meter will use in all subsequent displays and calculations.

GPS = gallons per second; GPM = gallons per minute; GPH = gallons per hour; MGD = millions of gallons per day; CFS = cubic feet per second; CFM = cubic feet per minute; CFH = cubic feet per hour; CFD = cubic feet per day; LPS = liters per second; M3S = cubic meters per second; M3M = cubic meters per minute; M3H = cubic meters per hour; M3D = cubic meters per day; AFD = acre-feet per day.

TOTALIZED VOLUME UNITS
• GAL • • MGAL • • CF • • L • • M3 • • AF •

This step determines the units value the flow meter will use to record the totalized flow volume that passes by. GAL = gallons; MGAL = millions of gallons; CF = cubic feet; L = liters; M3 = cubic meters; AF = acre-feet.

For the next several substeps you must have the appropriate sensor attached to the flow meter's **Parameter Port** or **Rain Gauge Port** (for the **Rain Gauge** or **YSI 600 Sonde**) to take advantage of the capabilities. You can only have D.O./temperature, pH/temperature or temperature alone on a given flow meter, unless you use the YSI 600 Sonde. The YSI 600 Sonde provides multiple outputs simultaneously. You can use the Rain Gauge with the YSI 600 sonde if you use a Y-connect cable.

Remember that programming for one type of sensor will prevent the display of any references to the other in later program steps. All sensors but the rain gauge are mounted fully submerged in the flow stream. The pH and D.O. probes must be kept ***constantly wet*** or they can be damaged.

NOTE

The pH or D. O. probes do not attach directly to the flow meter, as their output signals are quite low. You must also have the appropriate amplifier box connected between the probes and the flow meter.

Their use in streams with intermittent flow (such as storm drainage) is not recommended. Note that even in normal use, the pH probe becomes contaminated over time and exposure, and will eventually need replacement in any case.

RAIN GAUGE
• INCHES • • MM • • NOT MEASURED •

You must have a **Isco Model 674 Rain Gauge** (or approved equivalent) connected to the flow meter

through the **Rain Gauge Port** to sense rainfall. MM = millimeters. The rain gauge is factory-calibrated. See **Chapter 4** (Accessories) for more information about the rain gauge. If you are not using a rain gauge, you would select NOT MEASURED for this step.

- *If you choose not to measure rainfall, no more references to rainfall will appear in the rest of the program.*

```
pH UNITS OF MEASURE
• pH • • NOT MEASURED •
```

pH measurement determines the relative acidity or alkalinity of a solution. You must have an **Isco pH Probe** (or approved equivalent) connected to the flow meter through the parameter port to sense pH. pH measurements range from 0 to 14 pH units, with solutions below 7 considered acidic and solutions above 7, alkaline. (Pure water has a pH of 7.)

These devices require periodic calibration for accurate sensing of pH. See **Chapter 4** (Accessories) for more information about the pH probe. If you are not using a pH probe you would select NOT MEASURED for this step.

- *If you choose NOT MEASURED for pH, no further references to pH will appear.*
- *If you select pH, you will be unable to measure D. O. and no more references to D.O. will appear in the program.*
- *If your situation requires the measurement of both parameters (pH and D.O.) at the same time, or if you also need to measure conductivity, use the YSI 600 Multi-Parameter Sonde.*

If you select NOT MEASURED and press **Enter**, the following will appear:

```
D. O. UNITS
• MG/L • • PPM • • NOT MEASURED •
```

Measurement of dissolved oxygen is conducted in studies of water quality in lakes and streams. Some dissolved oxygen is necessary for the survival of aquatic life in these waters.

You must have an **Isco Dissolved Oxygen Probe** (or approved equivalent) to sense dissolved oxygen. The probe attaches to the **Parameter Port.** These devices require periodic calibration for accurate sensing. See **Chapter 4** (Accessories) for more information about the dissolved oxygen probe. PPM = parts per million; MG/L = milligrams per liter.

If you are not using the D. O. probe, you would select NOT MEASURED for this step.

- *Selection of NOT MEASURED will keep D. O. from appearing on subsequent programming menus.*

Selection of PPM or MG/L will keep references to pH from showing up on subsequent menus.

```
TEMPERATURE UNITS
• DEG F • • DEG C • • (NOT MEASURED) •
```

This step sets up temperature measurement of the flow stream. You must have an Isco Temperature Probe attached to the flow meter's Parameter Port. The temperature probe contains a thermistor and needs no further calibration.

Measurement is in degrees Celsius or degrees Fahrenheit. If you are not using the temperature probe, you would select NOT MEASURED for this step.

- *Selection of NOT MEASURED will keep TEMPERATURE from appearing in subsequent programming menus.*

Note that if you are using either the pH or D. O. probe, temperature ***must*** be measured; the NOT MEASURED option will not even appear.

The following series of menus concerns the use of the YSI 600 Multi-Parameter Sonde. This probe, allows you to measure several different characteristics of a flow stream at the same time. The YSI 600 Sonde attaches to the Rain Gauge connector on the Model 4210. Note that this connector must be a special, modified connector with nine pins.

NOTE

Model 4210 Flow Meters with 4-pin Rain Gauge connectors cannot support the YSI 600. It is necessary to return the flow meter to the factory for modifications if you wish to use a YSI 600 Sonde. In addition to the connector, there are significant internal modifications to the flow meter's electronics and software.

You can use both the YSI Sonde and a Rain Gauge on flow meters that support the YSI with a special Y-connect cable. Note that the YSI 600 Sonde differs from the previously-mentioned pH and D.O. probes. The YSI 600 can measure pH and D.O. at the same time, as well as temperature and conductivity.

If you are not using the YSI 600 sonde, select NO in the following display and the flow meter will advance to the next step. Otherwise, select YES.

```
YSI 600 CONNECTED
• YES • • NO •
```

- *If you select NO, you will be unable to activate the YSI Sonde later in the program.*

If no communication has been confirmed, the following display will appear:

```
YSI COMMUNICATIONS CHECK
• YES • • NO •
```

NO is the default. If you select YES, the following display will appear:

```
WARNING – DO NOT DISCONNECT POWER
YSI COMMUNICATION CHECK. PLEASE WAIT...
```

CAUTION

The reason you should not disconnect either the sonde or flow meter power during a communications check is that the memory in the sonde can be damaged by a power failure during an update.

If the communication check is bad, the following display will appear:

```
COMMUNICATIONS CHECK FAILED
PRESS ENTER TO CONTINUE
```

NOTE

The flow meter cannot communicate at 600 baud. If your sonde has been set up for 600 baud, you will get a communications failure. Consult the YSI 600 Manual for what to do in this case.

If the communications check is good, the following display will appear:

```
COMMUNICATIONS RATE SET AT 2400 BAUD
PRESS ENTER TO CONTINUE
```

After you press Enter, the flow meter will advance to the following display:

```
YSI 600 pH UNITS OF MEASURE
• pH • • NOT MEASURED •
```

- *Selection of NOT MEASURED from any of the YSI menus will prevent you from activating that function later in the program.*

If you wish to make use of the YSI 600 sonde's pH measurement capability, select pH. If you do not, select NOT MEASURED.

```
YSI 600 D.O. UNITS OF MEASURE
• MG/L • • NOT MEASURED •
```

If you wish to make use of the YSI 600 sonde's D.O. measurement capability, select MG/L. Otherwise, select NOT MEASURED.

```
YSI 600 CONDUCTIVITY PARAMETER
•YSI SP COND••YSI SALINITY••YSI CONDUCTIVITY•>
```

For any of the YSI CONDUCTIVITY options, if you press **Enter**, the following display will appear:

```
TEMPERATURE COEFFICIENT
1.91%
```

This value is provided because conductivity rises (~2%/ °C) with temperature. The default setting is 1.91%. This value is the temperature coefficient for pure KCl (potassium chloride) in water. For other salts this value will be somewhat inaccurate, but it does provide a close approximation for solutions of many common salts, such as NaCl (sodium chloride), NH_4Cl (ammonium chloride) and sea water. If you use the value of 1.91, in most cases you will be able to identify that gross changes are occurring in the ionic content of the stream. If you move with the right arrow, the following options will appear on the display:

```
YSI 600 CONDUCTIVITY PARAMETER
• YSI T.D.S. • • NOT MEASURED •
```

T.D.S. stands for "total dissolved solids." T.D.S. are measured in parts per thousand (ppt).

```
TDS SCALE FACTOR
0.75
```

Total dissolved solids are estimated by multiplying conductivity by an empirical factor. This factor can vary between 0.55 and 0.9 depending on the solubility of the ionic components in the water and its temperature.

```
YSI 600 TEMPERATURE UNITS
• °F • •°C • • NOT MEASURED •
```

Select the temperature units that are appropriate for your application.

7. Step 2 - Flow Conversion (Level-to-Flow)

If you select **step 2**, the following will appear:

```
FLOW CONVERSION TYPE
•WEIR/FLUME• •EQUATION• •MANNING• •DATA POINTS•
```

WEIR/FLUME = weir or flume; EQUATION = equation; MANNING = Manning; DATA POINTS = data points.

Select WEIR/FLUME and the following will appear:

```
TYPE OF DEVICE:
• WEIR • • FLUME •
```

For detailed information on weirs and flumes, refer to the ***Isco Flow Measurement Handbook*** that was shipped with your flow meter. Consulting the manufacturer of the specific weir or flume is also worthwhile. Note that for weirs and flumes, there is a preferred location for installing the level measuring device. Proper mounting of the level measurement device and accurate measurement of the level in the flow stream at the calibration point are essential for accurate flow calculation by the flow meter.

If you select WEIR, the following will appear:

```
SELECT TYPE OF WEIR:
• V-NOTCH • • RECTANGULAR • • CIPOLLETTI •
```

If you select V-NOTCH, the following will appear:

```
SELECT V-NOTCH WEIR ANGLE (IN DEGREES)
• 22.5 • • 30 • • 45 • • 60 • • 90 • • 120 •
```

If you select RECTANGULAR for of weir, the following will appear:

```
END CONTRACTIONS ON RECTANGULAR WEIR:
• YES • • NO •
```

If you select YES, the following will appear:

```
RECTANGULAR WEIR WITH END CONTRACTIONS
ENTER CREST LENGTH XX.XXX FEET (or meters)
```

If you select CIPOLLETTI for the type of weir, the following will appear:

```
CIPOLLETTI WEIR
ENTER CREST LENGTH XX.XXX FEET (or meters)
```

If you selected FLUME for the type of standard device, the following display will appear:

```
SELECT TYPE OF FLUME
• PARSHALL • • PALMER-BOWLUS • • LEOPOLD-LAGCO •
```

Also available with the **arrow** key:

```
SELECT TYPE OF FLUME
• HS • • H • • HL • • TRAPEZOIDAL
```

If you select PARSHALL for the type of flume, the following will appear:

```
SELECT PARSHALL SIZE:
• 1" • • 2" • • 3" • • 6" • • 9" • • 1.0' • • 1.5' • • 2.0 •
```

If you press the **right arrow** key several times, the sizes shown below will move onto the screen:

```
SELECT PARSHALL SIZE:
• 3' • • 4' • • 5' • • 6' • • 8' • • 10' • • 12' •
```

If you select PALMER-BOWLUS for the type of flume, the following will appear:

```
SELECT PALMER-BOWLUS SIZE
• 4" • • 6" • • 8" • • 9" • • 10" • • 12" • • 15" • • 18" • • 21 •
```

If you press the **right arrow** key several times, the sizes shown below will move onto the screen:

```
SELECT PALMER-BOWLUS SIZE
• 24" • • 27" • • 30" • • 48" •
```

If you select LEOPOLD-LAGCO for flume, the following will appear:

```
LEOPOLD-LAGCO FLUME SIZE
• 4" • • 6" • • 8" • • 10" • • 12" • • 15" • • 18" • • 21" •
```

If you press the **right arrow** key several times, the sizes shown below will move onto the screen:

```
LEOPOLD-LAGCO FLUME SIZE
• 24" • • 30" •
```

If you select HS for the type of flume, the following display will appear:

```
HS FLUME SIZE
• 0.4' • • 0.5' • • 0.6' • • 0.8' • • 1.0' •
```

Select H for flume and the following will appear:

```
H FLUME SIZE
• 5' • • .75' • • 1' • • 2' • • 2.5' • • 3' • • 4.5' •
```

Select HL for flume and the following will appear:

```
HL FLUME SIZE
• 2.0' • • 2.5' • • 3.0' • • 3.5' • • 4.0' •
```

If you select TRAPEZOIDAL for the type of flume, the following will appear:

```
TRAPEZOIDAL SIZE
• LG 60 V • • 2" 45 WSC • • 12"45 SRCRC •
```

(This completes the section on WEIR/FLUME flow conversions.) Returning to Step 2, SELECT FLOW CONVERSION: If you select EQUATION the following will appear:

```
ENTER EQUATION UNITS
Q = XXX.XXXH^X.XX + XXX.XXXH^X.XX
```

This step allows you to enter an equation that is appropriate for your flow situation. The equation is expressed in the general form of $Q = k_1H^{P1} + k_2H^{P2}$, where Q = flow rate, k_1 = a constant, H = level or head, and ^{P1} is the power to which H is raised. k_2 and ^{P2} are a second constant and power found in some equations. If your equation has only one term, you should enter 0 for the second constant.

Again returning to Step 2, SELECT FLOW CONVERSION, if you select MANNING, the following display will appear:

```
SELECT MANNING TYPE
• ROUND PIPE • • U-CHANNEL • • RECTANGULAR • • T–
```

TRAPEZOIDAL is also available, if you move to the right with the **right arrow** key.

If you select ROUND PIPE for the Manning flow conversion, the following displays will appear:

```
MANNING ROUND PIPE
SLOPE = X.XXXXX ROUGH = X.XXXX
```

Slope is entered as a dimensionless quantity, delta Y/ delta X, *not* as percent slope. Or, as otherwise expressed:

$$\frac{\Delta X}{\Delta Y} = \frac{\text{Rise}}{\text{Run}} \qquad \textit{For example: } \frac{1}{100} = .01$$

Roughness coefficients are published in the ***Isco Open Channel Flow Measurement Handbook***. You must know the material the pipe is made of. The roughness coefficients are published for all common materials in three grades: minimum, normal and maximum. Then:

```
MANNING ROUND PIPE
DIAMETER = X.XXX FEET (or meters)
```

If you select U-CHANNEL for the Manning flow conversion, the following displays will appear:

```
MANNING U-CHANNEL
SLOPE = X.XXXXX ROUGH = X.XXX
```

(Slope and roughness are entered as for ROUND PIPE previously.) Then:

```
MANNING U-CHANNEL
WIDTH = X.XXX FEET (or meters)
```

If you select RECTANGULAR for the Manning flow

conversion, the following displays will appear:

```
MANNING RECTANGULAR
SLOPE = X.XXXXX ROUGH = X.XXX
```

(Slope and roughness are entered the same as for ROUND PIPE previously.) Then:

```
MANNING RECTANGULAR
WIDTH = X.XXX FEET (or meters)
```

If you select TRAPEZOID for the Manning flow conversion, the following displays will appear:

```
MANNING TRAPEZOID
SLOPE = X.XXXXX ROUGH = X.XXX
```

(Slope and roughness are entered as for ROUND PIPE previously.) Then:

```
MANNING TRAPEZOID
TOP WIDTH = X.XXX FEET (or meters)
```

Then:

```
MANNING TRAPEZOID
BOTTOM WIDTH = X.XXX FEET (or meters)
```

Returning to Step 2, FLOW CONVERSION TYPE, if you select DATA POINTS, the following will appear:

```
SELECT DATA SET
• ONE • • TWO • • THREE • • FOUR • • (NONE) •
```

Then:

```
LEVEL UNITS FOR DATA POINT ENTRY
• FT • • IN • • M • • MM •
```

This allows you to enter data points that are in different units than you are using. Then:

```
FLOW RATE UNITS
• GPM • • GPS • • MGD • • CFS • • CFM • • M3S • • M3H • • M3D •
```

If you press the right arrow key several times, the following units will appear on the display:

```
FLOW RATE UNITS
• LPS • • CFD • • GPH • • AFD • • CFH • • CFM • • M3M •
```

GPM = gallons per minute; GPS = gallons per second, MGD = million gallons per day, CFS = cubic feet per second; CFM = cubic feet per minute, M3S = cubic meters per second; M3M = cubic meters per minute; M3H = cubic meters per hour; M3D = cubic meters per day; LPS = liters per second; CFD = cubic feet per day; GPH = gallons per hour; AFD = acre-feet per day; CFH = cubic feet per hour.

DATA POINT flow conversion allows you to enter measured level and flow rate values for a number of different points. The Model 4210 Flow Meter can accept up to four sets of data points with each set containing as many as fifty points.

The flow meter then performs a three-point interpolation to calculate a flow rate appropriate for the data entered. The common use of data point flow conversion is with unusual primary measuring devices, specifically devices that the 4210 does not support in the WEIR/FLUME flow conversion set.

The level- to-flow rate data for such devices is usually available from the manufacturer. From this data the flow meter can create a flow conversion based on the relationship between the level and flow rate.

After the FLOW RATE UNITS menu has appeared, the next menu is:

```
SET X (1-4): (0) POINTS ENTERED
• ADD POINT • • (UNITS) •
```

Then:

```
SET 1 DATA POINT 1
ENTER: 0.00 (level units) 0.000 (units of volume)
```

After you have entered the data point set the following will appear:

```
SET X (1-4): XX (1-50) POINTS ENTERED
• (USE) • • EDIT POINT • • ADD POINT • • CLEAR • • PRINT •
```

UNITS, SAVE will also appear if you move the flashing cursor with the right arrow key. USE will only appear after four points have been entered. USE tells the flow meter that the set is complete and can be used for the flow rate calculation.

Select EDIT POINT if you need to change either the level or the flow value for a particular data point.

Select ADD POINT if you want to add another point to a data set.

CLEAR will erase an entire set of data points from the flow meter's memory.

PRINT will make the flow meter print out the entire data set.

UNITS allows you to set or change the units of measure used in the data set. Note that you can only set UNITS if the set is empty, or you have cleared it. You cannot change the units once you have entered data points into a set unless you clear it and start over.

SAVE tells the flow meter to save the data set as it is.

If you select either EDIT POINT or ADD POINT, the following display will appear:

```
SET X (1-4) DATA POINT XX (1-50)
ENTER: XX.XX (level units) XXX.XXX (volume)
```

8. Enter Maximum Head

Before advancing from *step 2* **(Flow Conversion)** to *step 3* **(Adjust Ports)**, the flow meter will request that you enter a value for **Maximum Head** (Level) for the device or flow conversion you are using.

For most standard measuring devices this information is published or is available from the device manufacturer. Note, however that you should not arbitrarily use the largest value available. Instead, use the value that is the largest *expected* level for

your actual situation, even if this is less than the published maximum.

The flow meter's internal resolution and its accuracy are based on the value you enter for Maximum Head. The flow meter will display:

FLOW RATE AT MAXIMUM HEAD *X.XXX* CFS *(or other units of measure)*

Programming the 4 - 20 mA Outputs

If you turn on any of the 4 - 20 mA outputs (ANALOG OUTPUTS) in **step 1- Setup**, programming the actual operation of the output appears in **step 2 - Select Flow Conversion.**

NOTE

If you do not turn on the 4-20 mA output(s) in **step 1**, the menus determining its (their) operation will not even appear later in the program. If you need this function and cannot find the appropriate menus in **step 2**, return to **step 1, Setup** and check to see that you have not inadvertently switched the option off.

For each 4-20 mA output port turned on, the flow meter will request entry of the type of data that will drive the output, along with minimum and maximum values. Here is an example of what you might see for programming analog output 1.

DATA TYPE FOR ANALOG OUTPUT 1 • (OFF)••(LEVEL)••(FLOW RATE)••(VELOCITY)••(pH)•

TEMPERATURE, DISSOLVED OXYGEN, CONDUCTIVITY, SPECIFIC CONDUCTANCE, SALINITY, and TOTAL DISSOLVED SOLIDS may also appear as driving conditions.

The actual choices available to you will depend on what ports you have turned on previously and what accessories (YSI, pH, DO probes, rain gauge, *etc.*) you are using with your flow meter. After you select one of the choices available to you, the flow meter will request that you enter minimum and maximum values for that choice:

ANALOG OUTPUT PORT 1 4 MA = *X.X* (*units*)

Note that 4 MA in the second line of the display could also be 0 MA if that is what you selected for the current loop minimum in **Setup**. The units are the units of measure appropriate for the option you selected; for example, *feet* or *meters* for level, *degrees F* or *C* for temperature, *mg./l* for dissolved oxygen, etc. After you have set the minimum value for the port, the flow meter will request you to enter a value for full-scale, or 100%:

ANALOG OUTPUT PORT 1 20 MA = *X.X* (*units*)

This value causes the port to transmit 100% or 20 mA. For example if the data type selected for this output were level, and the unit is measuring level in a four-foot pipe, you would enter a full-scale value of four feet. If the actual level reading is currently two feet, the analog output would read 12 mA (50% if the 4-20mA current range is selected) or 10 mA (50% if the 0-20 mA current range is selected).

The flow meter will then request that you repeat the process of defining the data type and setting the minimum and maximum values for any of the other analog ports you activated previously in **Setup**.

9. Step 3 - Port to Adjust

This step lets you enter the measured level in the flow stream. It also lets you calibrate the pH (acidity or alkalinity), D.O. (dissolved oxygen) parameter sensors, and the YSI 600 Multiple Parameter Sonde. Note that there is no calibration step for the temperature sensor because it doesn't need calibration. When you select ***step 3*** the following will appear:

PORT TO ADJUST • NONE • • (LEVEL) • • (pH) • • (D. O.) • • (YSI 600) •

LEVEL will not show up if you are using the flow meter only for ***parameter sensing***. Likewise, pH and/or D. O. and YSI 600 will not show up on the display if you have locked them out by programming selections you made in ***step 1.***

Remember that selection of ***either*** pH or D. O. in step 1 ***will keep the other from appearing*** on the display in this or subsequent programming steps. If the parameter you want does not appear in this menu, exit the program and return to ***Setup.*** Check to see that you have not accidentally locked your choice out with selections you made in the early section of the program.

If you select NONE, the flow meter will advance to the next step. If you select LEVEL, the following will appear:

ENTER CURRENT LEVEL *X.XXX* FEET *(or meters)*

First measure the level in the flow stream. This is usually done with a measuring stick, or you read the level from a scale that may be painted or printed on the side of the primary measuring device.

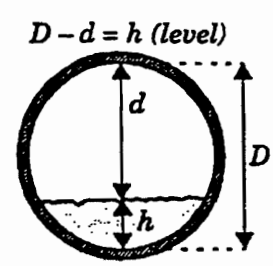

This drawing shows you how to measure level. You then enter this value with the number keys. Note that LEVEL ADJUST must be done at the job site, while most other programming can be done in the shop.

NOTE

It is ***very important*** to enter accurate measurements for both the level in the stream and the dimension(s) of the channel, as all calculations of flow will be based on these measurements. If the values entered are incorrect, even by relatively small amounts, all subsequent flow calculations will be incorrect also.

For example, an error of only ¼" for a 3" level and ¼" for a 10" diameter round pipe can result in a combined error of over 14%!

Errors in level measurement have a greater effect on flow calculations at low liquid levels. Dimensional errors tend to be more significant at higher levels.

Enter this value with the number keys. Note that LEVEL ADJUST must be done at the job site, while most other programming can be done in the shop. Unless you have reliable information about the size of the channel, you should measure that, also.

If you select pH for port to adjust, the following display will appear. (Note that pH will not appear as an option unless you have selected it in **step 1.**) If you want to measure pH and pH does not appear in this step, you must go back to step 1 and select pH instead of NOT MEASURED.

```
pH CALIBRATION
• pH 4 & 7 • • pH 7 & 10 • • pH 4, 7, & 10 •
```

You can perform a two- or three-point calibration for pH with the pH sensor. Select the calibration that best suits your stream's profile. If the pH in your stream in generally below 7, you would probably select pH 4 & 7. If the pH is generally above 7, you would probably select pH 7 & 10. If your stream's pH varies a great deal, say from 3 to 12, your best choice would be pH 4, 7, & 10. Then:

```
RINSE PROBE AND PLACE IN 4.0 pH SOLUTION
PRESS ENTER WHEN STABLE   X.XX pH
```

The flow meter will direct you to repeat this process with the other standard buffers (7 and/or 10) to calibrate the pH sensor. If the probe fails to provide the correct output with any of the buffer solutions you will receive the following message:

```
pH BUFFER/PROBE OUT OF RANGE
PRESS ENTER TO CONTINUE
```

If you select D. O. for port to adjust, the following display will appear:

```
DISSOLVED OXYGEN CALIBRATION
•D.O. STANDARD••ABS BAROMETRIC PRESSURE•>
```

ALTITUDE is just off screen to the right. If you select D.O. STANDARD for the calibration method, the following display will appear:

```
D.O. STANDARD
0.00 MG/L
```

If you select ABS (absolute) BAROMETRIC PRESSURE the following will appear:

```
ABS BAROMETRIC PRESSURE
X.XX mmHg
```

Note that absolute barometric pressure is barometric pressure ***not*** corrected to sea level. The barometric pressure published by the U.S. Weather Bureau ***is*** corrected to sea level. If you use their value, you must convert it to the absolute pressure for your altitude. You should use Weather Bureau barometric pressure only if you are at sea level, or are able to correct the Weather Bureau figure to absolute pressure at your location. Enter the value for atmospheric pressure.

```
WRAP D. O. PROBE IN MOIST CLOTH
PRESS ENTER WHEN STABLE: X.XX MS/CM:
```

Then the display will advance to the following:

```
CALIBRATING...
PLEASE WAIT...
```

If you select ALTITUDE for D.O., the following will appear:

```
UNITS FOR ALTITUDE ENTRY
• FT • • M •
```

Select the appropriate units and press **Enter.**

```
ALTITUDE
ALTITUDE = X.XX FT (or meters)
```

Enter the altitude for your location. Then:

```
WRAP D. O. PROBE IN MOIST CLOTH
PRESS ENTER WHEN STABLE: X.XXX MG/L
```

For more detailed information on the pH and D. O. probes, see **Chapter 4.**

Returning to **step 3, Parameter to adjust,** the following display will appear:

```
PARAMETER TO ADJUST
• NONE • • (LEVEL) • • (pH) • • (DO) • • (YSI 600) •
```

NOTE

If you are using the YSI Sonde and YSI 600 does not appear on your display, return to step 1, **Program,** and make sure you have selected YES from the YSI CONNECTED menu.

If you select YSI 600, the following display will appear:

```
YSI 600 PARAMETER TO CALIBRATE
• NONE • • pH • • DO • • CONDUCTIVITY •
```

If you select pH for the parameter to calibrate, the following display will appear:

```
YSI 600 pH CALIBRATION
• pH 4 & 7 • • pH 7 & 10 • • pH 4, 7, & 10 •
```

You can perform a two- or three-point calibration for pH with the YSI sonde. The menus that follow are similar to those in the preceding section for the Isco pH sensor. Select the calibration that best suits your stream's profile. When you complete the pH calibration successfully, the following display will appear:

```
CALIBRATING...
PRESS ENTER TO CONTINUE
```

Returning to the YSI menu, if you select D.O:

```
YSI 600 DISSOLVED OXYGEN CALIBRATION
• D.O. STANDARD• •ABS BAROMETRIC PRESSURE •>
```

ALTITUDE is just off screen to the right. Programming for YSI 600 D.O. is essentially the same as that described for the Isco D.O. sensor on the preceding section, with the exception that you always place the sensor in a cup, rather than wrap a moist cloth around it as is done for the Isco D. O. sensor.

If you select CONDUCTIVITY for the parameter to calibrate, the following display will appear:

```
CONDUCTIVITY CALIBRATION UNITS
• MS/CM • • PPT •
```

MS/CM is milli-siemens per centimeter. The *siemen* is the S.I. (*Système Internationale*) name for the unit of conductance, which is also the reciprocal of the *ohm*. The siemen was formerly called the *mho* (*ohm* spelled backwards), and that term is more familiar to some. PPT is *parts per thousand*. Select the standard most suitable for your application.

```
CONDUCTIVITY STANDARD
X.XX MS/CM
```

Then:

```
PLACE PROBE IN X.XX MS/CM
PRESS ENTER WHEN STABLE: X.XX MS/CM
```

Then:

```
CALIBRATING...
PLEASE WAIT...
```

If you select PPT for the conductivity standard:

```
CONDUCTIVITY STANDARD
X.XX PPT
```

Then:

```
PLACE PROBE IN X.XX PPT
PRESS ENTER WHEN STABLE: X.XX MS/CM
```

Then:

```
CALIBRATING...
PLEASE WAIT...
```

Note that there is no need to calibrate the YSI 600 temperature sensor, as it is self-calibrating.

10. Step 4 - Reset Totalizer

This step allows you to reset the flow meter's internal flow totalizer. Note that there is the possibility c more than one totalizer. The Model 4210 has th capability of maintaining a separate totalizer for the time the sampler is enabled through the **sampler enabling** feature (**step 6**). If you select **step 4**, the following will appear. If you select NO, the flow meter will advance to the next step. If you select YES, the flow meter will reset the internal totalizer to zero.

```
RESET TOTALIZER
• YES • • NO •
```

Then, if you have **sampler enabling** turned on (**Step 6**), the flow meter will ask you whether you want to reset the totalizer for the total flow during the time the sampler was enabled. (See **step 6** for an explanation of sampler enabling.)

```
ENABLE TOTALIZER XX CF (or other units of measure)
PRESS 'ENTER
```

Then:

```
RESET SAMPLER ENABLE TOTALIZER
• YES • • NO •
```

11. Step 5 - Sampler Pacing

This step determines how the flow meter will signal an associated automatic wastewater sampler to take a sample. The flow meter and sampler must b connected together with a cable. The flow mete. sends flow pulses to the sampler. The sampler uses these flow pulses as counts. When an appropriate number of flow pulses has been received by the sampler, it will take a sample. If you select **step 5**, the following will appear:

```
SAMPLER PACING
• DISABLE • • (VOLUME) • • (FLOWLINK) • • CONDITIONAL •
```

VOLUME will not appear if the flow meter is measuring level only, or is being used for parameter monitoring. The FLOWLINK menu option will not appear unless FLOWLINK software is installed and pacing has been downloaded from FLOWLINK.

If you select DISABLE for sampler pacing, the flow meter will be effectively disconnected from the sampler. The sampler will run its program as if the flow meter weren't there. Selection of DISABLE will also cause the flow meter to advance to the next Program step. If you select VOLUME for sampler pacing, the following will appear:

```
SAMPLER PACING
ENTER PACING VOLUME XX.XXXX CF
```

Other units of measure, as previously selected, ma appear here. The range for pacing is max. flow ÷ by 100 (minimum) or 10,000 x max. flow (maximum.)

Figure 7. YSI Calibration Flow Chart

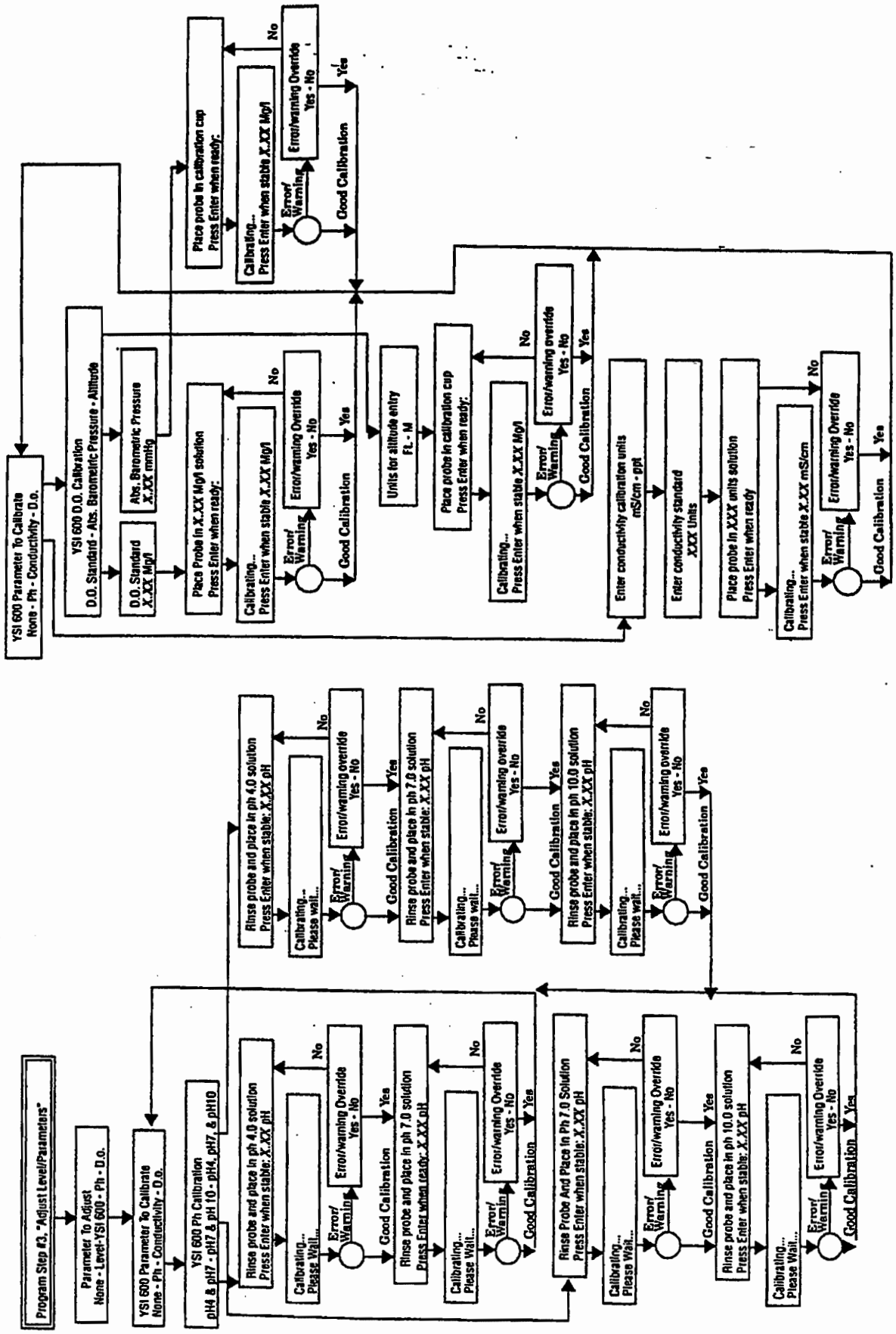

If FLOWLINK appears for sampler pacing, the operation of sampler pacing has been determined by choices made in FLOWLINK, Isco's proprietary data acquisition and storage software. FLOWLINK controls the flow meter remotely, via phone lines and a modem, or locally with a laptop computer and cable. In any event, if the sampler pacing definition is controlled by FLOWLINK, it can only be changed through FLOWLINK.

If you select CONDITIONAL for sampler pacing, the following will appear:

```
CONDITION
• (LEVEL) • • (FLOW RATE) • • (RAINFALL) • • (D. O.) • • (pH) •
```

(TEMPERATURE), (YSI pH), (YSI DO), (YSI CONDUCTIVITY) and (YSI TEMP) may also appear. Note that all the conditions shown above are in parentheses. Which ones actually appear depend on your previous programming selections. At least *one* of these menu options *will* be available to you. Pressing the **right arrow** key may be necessary to bring all items onto the display, (provided they are available for use.)

LEVEL will only appear if the flow meter is set up to measure level or flow.

RAINFALL, D. O., pH, and TEMPERATURE measurement require the appropriate sensor probe be used with the flow meter. Remember that only one parameter condition (D. O. or pH) can be measured by the flow meter at a time.

RAINFALL can appear if you have a rain gauge attached to the flow meter.

TEMPERATURE can be measured alone, or with either parameter probe.

D. O. and/or pH may not appear on the menu, depending on selections made in **step 1.** If you do not see the item you need, return to **step 1,** and recheck your programming. If you did not make the proper selections there, certain menu options will not appear here, as they would have been locked out.

The YSI 600 conditions of pH, DO, CONDUCTIVITY, and TEMPERATURE will only appear on the menu if you have turned them on in **steps 1 and 3.**

For any of these conditions, you can set the point at which change in the selected condition causes the flow meter to send a flow pulse to the sampler. The following menu will appear:

```
CONDITION
• GREATER THAN • • LESS THAN • • RATE OF CHANGE •
```

If you select GREATER THAN, the flow meter will ask you to enter a maximum value for the selected condition, which if exceeded, will trigger the flow pulse.

If you select LESS THAN, the flow meter will ask you to enter a minimum value for the selected condition. If the condition falls below that value later, the flow meter will send a flow pulse to the sampler.

If you select RATE OF CHANGE, the flow meter will ask you to enter two values, one for the condition, and the other for a period of time over which the change occurs. After you have determined what condition will signal the sampler and under what circumstances, the following menu will appear:

```
SELECT OPERATOR
• DONE • • OR • • AND •
```

SELECT OPERATOR allows you to trigger the sampler from a single condition or from two conditions. Suppose you wanted to trigger the sampler from only one condition and that condition was LEVEL. You would select level as the condition, and then identify what change in LEVEL would be the trigger. Then you would select DONE for the SELECT OPERATOR step. Selection of DONE will advance the flow meter to the next program step.

However, suppose you wanted to select ***two*** conditions, ***either*** of which would trigger the sampler. In such a case you would select OR for the SELECT OPERATOR step. The menu will return to the one listing the conditions. This will let you define the second condition. Now the flow meter will trigger the sampler when ***either*** condition changes.

Finally, suppose you had a situation where you wanted changes in two conditions to occur before you signalled the sampler. In that case you would select AND for the SELECT OPERATOR step. Then you would define the second condition. Now the flow meter will signal the sampler only after ***both*** conditions have changed.

The next screen on the flow meter (after you have established the conditions for sampler pacing) will request the following. (Entering 0 sends no pulses):

```
CONDITION TRUE PACING INTERVAL
PACE EVERY X MINUTES
```

This option allows you to send flow pulses periodically to the sampler during the time the conditions you established for sampler pacing are being met. Then:

```
CONDITION FALSE PACING INTERVAL
PACE EVERY X MINUTES
```

This option allow you to send flow pulses periodically to the sampler during the time the conditions you established for sampler pacing are ***not*** being met. Again, entering 0 sends no pulses.

12. Step 6 - Sampler Enable

The operation of **step 6 Sampler Enable** is similar to **step 5, Sampler Pacing.** The menus and options are similar. The difference is that where

sampler pacing only causes the flow meter to send a momentary signal (flow pulse) to the sampler, sampler enabling actually controls an inhibit line to the sampler that can keep the sampler from running its program. Sampler enabling is useful where the sampler needs to remain idle for long periods of time, such as **storm water runoff** applications. When you select or advance to **step 6**, the following display will appear:

```
SAMPLER ENABLE MODE
• DISABLE • • ENABLE • • CONDITIONAL • • (STORM) •
```

(FLOWLINK) may also appear. The FLOWLINK menu option will not appear unless FLOWLINK software is installed.

DISABLE means that the sampler will be permanently inhibited by the flow meter. This condition will remain until you change it in this program step, or if you are using FLOWLINK, until it is overridden by a command from FLOWLINK. Select the DISABLE option with care; it will make the sampler appear to be inoperative, and that could easily be misinterpreted as an equipment failure by someone not familiar with the programming of the flow meter.

ENABLE means that the sampler is permanently enabled, free to run its own program without any control from the flow meter. This condition will remain until you change this menu option, or until it is overridden by a command from FLOWLINK.

The STORM option will not appear unless you turned on rainfall measurement in **step 1**. STORM selection is what you use when you want to monitor storm water runoff.

STORM enabling is really a combination of conditions. First, enter a value for LEVEL in the flow stream. Second, enter a value for RAINFALL. Third, enter an amount of time over which the rainfall occurs. Finally, you enter a time since the last rainfall. You must have an **Isco Rain Gauge**, or approved equal to measure rainfall. The following menus are the STORM sequence:

```
LEVEL
GREATER THAN X.XXX FT (or other units of measure)
```

Followed by:

```
RAINFALL AMOUNT
X.XX INCHES (or other units of measure)
```

Then:

```
RAINFALL TIME PERIOD
• 15 MIN • • 30 MIN • • 1 HR • • 2 HR • • 4 HR •
```

If you press the **right arrow** key several times, the following times will appear:

```
RAINFALL TIME PERIOD
• 6 HR • • 8 HR • • 12 HR • • 24 HR • • 48 HR • • 72 HR •
```

The intervals above are the periods of time over which the rainfall occurs. The amount of rain entered in the previous step and detected by the rain gauge must fall during the time interval chosen from this menu before the flow meter recognizes the event as a storm.

The next menu defines the interval that must pass **between** storm events.

```
TIME SINCE LAST RAINFALL
DAYS: X (allowable entry of 1-7)
```

If you select CONDITION from SAMPLER ENABLE, the following will appear: -

```
CONDITION
• (LEVEL) • • (FLOW RATE) • • (D. O.) • • (pH) •
```

(TEMPERATURE), (RAINFALL), (YSI pH), (YSI DO), (YSI CONDUCTIVITY) and (YSI TEMP) may also appear. These conditions are all shown in parentheses, because they may or may not be available to you by the time you reach this menu. The menus that do appear will depend on the flow meter type and selections made earlier in the program. At least one of the conditions ***will*** be available to you.

If you select LEVEL from CONDITION the following will appear:

```
LEVEL
• GREATER THAN • • LESS THAN • • RATE OF CHANGE •
```

After you select one of these options, the flow meter will request that you enter a value, for example if you selected GREATER THAN:

```
LEVEL
GREATER THAN X.XX FEET (or other units of measure)
```

Enter a maximum value for the selected condition, which if exceeded, will enable the sampler.

If you select LESS THAN, the flow meter will ask you to enter a minimum value for the selected condition. If the condition falls below that value later, the flow meter will enable the sampler.

If you select RATE OF CHANGE, the flow meter will ask you to enter two values, one for the condition, and the other for a period of time over which the change occurs.

After you have determined what condition will signal the sampler and under what circumstances, the following menu will appear:

```
SELECT OPERATOR
• DONE • • OR • • AND •
```

This step allows you to trigger the sampler from a single condition or from two conditions. Suppose you wanted to trigger the sampler from only one condition and that condition was LEVEL. You would select LEVEL as the condition, and then identify what change in level would be the trigger. Then you

would select DONE for the SELECT OPERATOR step. Selection of DONE will advance the flow meter to the next program step. Selection of OR or AND will allow you to select another condition, and then determine whether both conditions are necessary for enabling (AND) or whether either condition will enable the sampler (OR).

If you select FLOW RATE:

```
FLOW RATE
• GREATER THAN • • LESS THAN • • RATE OF CHANGE •
```

You would select one of these options, and then enter a value, as for LEVEL, previously.

The rest of the menus will appear the same as they did for LEVEL and FLOW RATE. D. O., pH, TEMPERATURE, and RAINFALL all require activation in **step 1** and use of the appropriate sensor. Only one parameter condition (pH, D. O.) can be measured by the flow meter at a time. pH and D. O. cannot appear on the display at the same time.

It is possible to program the **sampler enable** option so that it operates in two different modes, **locking** and **nonlocking**. To explain this, in the **nonlocking** mode the sampler will be enabled only as long as the condition that caused the enabling remains outside of "normal." If the enabling condition returns to "normal," the sampler enable will turn off until the next time the condition goes outside of "normal."

In the **locking** mode, the sampler will be enabled the first time the condition goes outside of normal and ***the sampler will remain enabled regardless of any subsequent changes*** to the enabling condition. If this is the case, the following menu will allow you to reset the sampler enable feature. Note that this menu will not appear unless the condition necessary to enable the sampler has been met and the sampler is currently enabled.

```
WHEN ENABLE CONDITION IS NO LONGER MET
• DISABLE SAMPLER • • KEEP ENABLED •
```

Or.

```
ENABLE CURRENTLY LATCHED, RESET
• NO • • YES •
```

Select YES to reset the sampler enable feature; select NO to leave the sampler enabled.

```
PRINTER ON/OFF WITH ENABLE
• YES • • NO •
```

This selection allows you to turn the flow meter's internal printer on or off when the sampler is enabled from the flow meter. This allows you to conserve battery power and only print a chart when the sampler is enabled. This feature is useful for monitoring storm water runoff.

13. Step 7 - Alarm Dialout Mode

This step lets you signal an alarm to a remote location from the flow meter. The conditions that cause an alarm are the same as described previously for sampler enabling.

NOTE

You must have the optional internal modem installed and connected to a telephone network to make use of this feature. **This menu will not even appear if you do not have a modem.** The flow meter will automatically advance to the next step.

More information about the modem can be found in **Chapter 4.** If you have the modem installed and select **step 7**, the following will appear:

```
ALARM DIAL OUT
• DISABLE • • CONDITIONAL • • STORM • • FLOWLINK •
```

If you select DISABLE, this option will be inactivated until you change the selection later. The program will advance to the next step. If you select STORM, the flow meter will request definitions similar to those for STORM in sampler enable. The following will appear:

```
LEVEL
GREATER THAN X.XXX FT (or other units of measure)
```

Followed by:

```
RAINFALL AMOUNT
X.XX INCHES (or other units of measure)
```

Then:

```
RAINFALL TIME PERIOD
• 15 MIN • • 30 MIN • • 1 HR • • 2 HR • • 4 HR •
```

If you press the right arrow key several times, the following times will appear:

```
RAINFALL TIME PERIOD
• 6 HR • • 8 HR • • 12 HR • • 24 HR • • 48 HR • • 72 HR •
```

The intervals above are the periods of time over which the rainfall occurs. The amount of rain entered in the previous step and detected by the rain gauge must fall during the time interval chosen from this menu before the flow meter recognizes the event as a storm. The next menu defines the interval that must pass **between** storm events.

```
TIME SINCE LAST RAINFALL
DAYS: X (allowable entry of 1-7)
```

If you select CONDITIONAL for alarm dialout, the following will appear:

```
CONDITION
• (LEVEL) • • (FLOW RATE) • • (D. O.) • • (pH) •
```

(TEMPERATURE), (RAINFALL), (YSI pH), (YSI DO), (YSI CONDUCTIVITY), and (YSI TEMP) may also appear.

As mentioned previously, some of these menu options may not appear depending on selections you made earlier in the program. At least one of the options will be available to you.

D. O., pH, TEMPERATURE, the YSI outputs and RAINFALL all require activation in step 1 and connection of the appropriate sensor to the flow meter. D. O. and pH will never appear together, as only one can be used at a time. When you have selected the condition you want, the display will advance to the following:

```
CONDITION
• GREATER THAN • • LESS THAN • • RATE OF CHANGE •
```

For these conditions, you enter an amount which if exceeded (GREATER THAN), or if dropped below (LESS THAN), or if changed too quickly (RATE OF CHANGE), will activate the alarm dialout. For RATE OF CHANGE, you enter two values: ***amount*** and ***time over which change occurs***. Then the display will advance to the following:

```
SELECT OPERATOR
• DONE • • OR • • AND •
```

As described for sampler enabling previously, this step allows you to combine conditions to produce an alarm dialout signal. Select DONE if you don't need more than one condition to trigger the alarm.

If you want ***either*** of two conditions to trigger an alarm, select OR.

If you want ***both*** of two conditions to be met before signalling an alarm, select AND. Selection of DONE will advance you to the next display menu. Selection of OR or AND will return you to the CONDITION menu to select the other condition.

The flow meter will then request that you enter the telephone numbers for the remote alarms. There are five possible telephone numbers, in decreasing order of importance. You can enter as many as eighteen digits for each phone, so the remote targets need not necessarily be local. You can also use the decimal key (.) to insert a comma into the number, which enters a two-second delay Entering multiple commas will increase the delay.

```
ALARM DIALOUT NUMBERS
• DONE • • NUM 1 • • NUM 2 • • NUM 3 • • NUM 4 • • NUM 5 •
```

If you select DONE, the flow meter will advance to the next step. If you select one of the NUM entries, such as NUM 1, the following will appear:

```
FIRST PHONE NUMBER
XXXXXXXXXX
```

You can enter the phone numbers as straight seven or ten-digit numbers, or you can use the +/– key to enter a dash as telephone numbers are often written.

If you want to signal more than one remote number at a time, the numbers are arranged in decreasing priority. NUM 1 carries the highest priority, followed by NUM 2 and so on. After you have entered the numbers, the flow meter will request:

```
DELAY BETWEEN DIALOUTS
XX MINUTES
```

This is the time delay between calling the first number and calling the second, etc. This option gives you time to respond to an alarm before the flow meter dials the next number. Select a value between 1 and 99 minutes. Then the display will advance to the following:

```
CALLBACK TO DISABLE ALARM
• YES • • NO •
```

Select YES if you want to be able to acknowledge the alarm condition in the flow meter by calling back. No message is spoken on this callback.

When the flow meter's modem detects the ring, it will answer and automatically reset the alarm. If there is no one available to answer an alarm, you can have the flow meter dial a paging service and then someone with a pager can call back to acknowledge the alarm.

To acknowledge an alarm from a touch tone phone; wait for the spoken message to complete; then press *-*X-X-X*. The *X-X-X* are the three digits of the site ID number.

14. Step 8 - Printer Setup

This step sets up the operation of the flow meter's internal printer. This printer also functions as a plotter. Note that the printer/plotter is capable of printing alphanumeric information (words and numbers), and at the same time, plotting linear data like flow, level, pH, etc.

The unit can print as many as three different data lines at the same time it regularly records other printed information supplied from the flow meter. Program selections made in this step will determine the appearance of the printer/printer's chart.

The first menu will request the speed of the chart.

```
ENTER PRINTER SPEED
• OFF • • 1/2"/HR • • 1"/HR • • 2"/HR • • 4"/HR •
```

If you select OFF, the printer will be disabled. No data will be printed on the chart. The flow meter will, however, still print reports if you activate that function in step 9. The choice made from the other speeds depends on the amount of data you need to record on the chart.

If you are recording from a stable situation and are using only one data line, and you want to achieve maximum life for the roll of chart paper, you would select a lower speed for chart advance.

On the other hand, if there is a great deal of activity in your flow stream, and you need to use all three data lines, selection of a faster chart speed will probably produce a chart that is more easily read and interpreted.

After you select the printer speed, the flow meter will ask you to define what input you want depicted by printer LINE A. (The printer can print up to three separate data lines at the same time.) The following display will appear:

```
INPUT FOR PRINTER LINE A
• (LEVEL) • • (FLOW RATE) • • (pH) • • (D. O.) • • OFF •
```

(TEMPERATURE), (YSI pH), (YSI D.O.), (YSI CONDUCTIVITY), and (YSI TEMP) can also appear. Remember that menus in parentheses may or may not appear due to previous program selections. Either pH or D. O. may appear, but not both. The various YSI options will only appear if you have enabled the YSI 600 option in step 1, previously. You must have the appropriate probes to sense these conditions for the flow meter. Select OFF, if you do not wish to use this line.

If you select pH, D. O., TEMPERATURE, or any of the YSI options the flow meter will request that you set limits that will serve as the bottom of the chart and the chart full-scale.

```
PRINTER LINE A BOTTOM SCALE
X.XX pH (or other condition, as selected previously)
```

You would enter here the lowest pH value you expect to see in your flow stream:

```
PRINTER LINE A FULL SCALE
X.XX pH (or other condition, as selected previously)
```

Enter here the highest pH value you expect to see in your flow stream. Note that selection depends on the range that you would normally see. If your stream varies from 6 to 8 pH units, you would not want to enter 0 and 14 as limits. The chart resolution would be poor. You could enter 5 and 9 pH and still have good resolution if there were sharp deviations because of the availability of over-ranges.

Selection of OFF from the INPUT FOR PRINTER LINE menu will cause the printer to leave this line blank. Selection of conditions other than pH, D.O., TEMPERATURE, or YSI-functions will result in a request that you enter the full-scale value for the condition being plotted. For example, if you selected LEVEL as a condition, the following would appear:

```
PRINTER LINE A FULL SCALE
X.XXXX FEET (or other units of measure, as selected)
```

The flow meter will automatically go into over-range if the data goes higher than the full-scale value you have selected. You can easily recognize over-range operation by the plotted line running off the right side of the chart and then immediately reappearing on the left side of the chart. Because of the over-range feature, you can set a full-scale value that gives you good resolution on the chart.

At the same time, the automatic over-range will prevent the loss of recorded data if the plotted line rises past the full-scale point. For the other conditions, the full-scale units will be appropriate for what is being measured (D. O., pH, temperature, etc.) the flow meter is capable of multiple over-ranges.

```
INPUT FOR PRINTER LINE B
• (LEVEL) • • (FLOW RATE) • • (pH) • • (D. O.) • • OFF •
```

(TEMPERATURE), (YSI pH), (YSI D.O.), (YSI CONDUCTIVITY), and (YSI TEMP) may also appear.

Again, just as for line A, you can select another condition to plot on the chart. The flow meter will request a full-scale value. The full-scale value can be different than that entered for line A.

```
INPUT FOR PRINTER LINE C
•(LEVEL) • • (FLOW RATE) • • (D.O.) • • (pH) • • OFF •
```

(TEMPERATURE), (D. O.), (YSI pH), (YSI D.O.), (YSI CONDUCTIVITY), and (YSI TEMP) may also appear.

For line C, you can select yet another condition to plot on the chart. The flow meter will also request entry of a full-scale, or bottom and full-scale values, as for the previous two lineFor line C, you can select yet another condition to plot on the chart. The flow meter will also request entry of a full-scale value.

```
PLOT RAINFALL ON CHART?
• NO • • YES •
```

You must have an Isco Rain Gauge or equivalent connected to the flow meter to measure rainfall. Output is recorded in either inches or millimeters. Note that there is only one over-range for rainfall.

15. Step 9 - Reports/History

This step lets you set up the flow meter to print periodic reports. The typical report contains such information as the period of time covered in the report, maximum and minimum levels, and when they occurred. You can define two different reports in this step. For example, this is used to provide weekly and monthly reports. You can choose the content of the reports by working through the menus in **step 1**. When you go to step 9 the following will appear:

```
REPORT GENERATOR A
• ON • • OFF • • (PRINT) •
```

If you select OFF, the program will advance to the next step, and there will be no report A generated. If you select YES, the following will appear:

```
REPORT A DURATION TO BE IN
• HOURS • • DAYS • • MONTHS •
```

After you select the units of time, the following will appear:

ENTER REPORT A DURATION *XX* HOURS

DAYS or MONTHS could also appear depending on what you selected for the previous step. The time selected becomes the time interval that will be covered in the report. Then the flow meter will ask you when you want the first report printed:

PRINT REPORT A AT YR: *XXXX* MONTH: *XX* DAY: *XX* HR: *XX* MIN: *XX*

Then:

REPORT GENERATOR B • ON • • OFF • • (PRINT) •

The second report generator lets you program the flow meter to print two independent reports at different intervals, for example. This is useful for those who need both a weekly and a monthly summary of activity on the flow meter.

If you select OFF for this step, the program will advance to the next step, and there will be no report B generated. If you select YES, the following will appear:

REPORT B DURATION TO BE IN • HOURS • • DAYS • • MONTHS •

Select the appropriate interval for this second report. After you select the units of time the following will appear:

ENTER REPORT B DURATION *XX* HOURS

DAYS or MONTHS could also appear depending on what you selected for the previous step. The time selected becomes the time interval that will be covered in the report. Then the flow meter will ask you when you want the first report printed:

PRINT REPORT A AT YR: *XXXX* MONTH: *XX* DAY: *XX* HR: *XX* MIN: *XX*

After you have entered the desired date for the first report, the program will advance to the following:

PRINT FLOW METER HISTORY • YES • • NO •

The final step on the flow meter is HISTORY. This step presents a record of the programming activity on the flow meter that you can have printed on the printer. The flow meter keeps a record of certain programming changes and prints them out. If you select YES, the following will appear:

PRINT FLOW METER HISTORY • PRINT SINCE LAST • • PRINT ALL •

If you press PRINT SINCE LAST, the flow meter will only print the changes that have occurred since the last print request. If there were no changes, there will be no print. If you select PRINT ALL, the flow meter will print all the changes it has in memory, as far back as fifty entries.

If you selected NO from PRINT FLOW METER HISTORY, the flow meter will advance to CLEAR HISTORY - YES, NO.

If you select NO again, the flow meter will exit programming and return to the normal display. If you clear the memory, previous programming changes will be erased, but the flow meter will again begin keeping track of changes the next time you change the program.

Figure 8. Flow Meter History Contents

D. O. ADJUSTED
pH ADJUSTED
LEVEL ADJUSTED
FLOW CONVERSION CHANGED
PLOTTER SPEED CHANGED
PLOTTER TURNED ON
PLOTTER TURNED OFF
TIME CHANGE FROM
TIME CHANGE TO
REPORT A CHANGED
REPORT B CHANGED
REPORT A TURNED ON
REPORT B TURNED ON
REPORT A TURNED OFF
REPORT B TURNED OFF
TOTALIZER RESET
INTERROGATED
SAMPLER ENABLED
SAMPLER DISABLED
ALARM ACKED BY #X
ALARM NOT ACKNOWLEDGED
YSI pH ADJUSTED
YSI D.O. ADJUSTED
YSI CONDUCTIVITY ADJUSTED

CHAPTER 3

Installation Procedures - This section of the manual tells you how to install the Model 4210 Flow Meter. There is also information on mounting methods, interconnection wiring, and the setup procedure.

1. Installation

Preparation for Use

Isco ships the flow meter with a roll of paper installed and a default program entered into memory. You should familiarize yourself with the programming procedure and practice working through the program steps, so you become comfortable with programming the unit. With the exception of setting the level, you can program the unit in the shop, rather than on the job site, if you want. This is a good idea as it will minimize the possibility of dirt and contamination getting inside the flow meter.

Install Desiccant Canister

If the unit is new, at this time you should install the desiccant canister. It is provided in the accessory package and looks like a small, flat can with little holes in it. Open the flow meter case lid. Note the small clamp that resembles a bottle cap opener located near the bottom right-hand corner of the case lid. Install the desiccant canister by pressing it under this bracket, with its viewing window lined up with the circular hole in the bracket. Make sure the clamp is fully engaged over the canister. The particles inside the desiccant window should be blue. If the particles are pink, the desiccant is saturated and you will need to regenerate the canister before using it. If the unit has been in use and has been returned for reprogramming, you should clean it and inspect it as outlined in **Chapter 5** of this manual.

Opening the Case

To access the flow meter keypad and internal plotter, you must open the case. Do this by unlatching the two catches on the right side of the flow meter cabinet (as you face it) and opening the lid.

Keeping Lid Closed Recommended

Keep the flow meter lid closed and latched whenever possible. This will protect the internal components from dirt and moisture, and will prolong the life of the desiccator.

NOTE

Do *not* operate the flow meter with a saturated desiccant canister or with the door left open. Dust and moisture will settle inside and cause damage that can eventually damage the unit seriously. For maximum equipment life, inspect the desiccant canister regularly and regenerate it when necessary. Keep the lid closed and latched unless you are programming or servicing the flow meter.

The case and door have a seal between them and you should keep the door closed and latched to protect the flow meter mechanism. A case left open will defeat the purpose of the seal by causing the desiccant canister to quickly saturate with moisture. Dust will also begin to settle inside the case. Dust will wear the moving parts of the plotter prematurely. Many flow meters are installed in damp environments. Moisture and fumes dispersed inside the case can form acids that will corrode the electronics, causing unreliable operation and eventual circuit failure.

2. Connection to a Power Source

The Model 4210 requires a 12 volt, direct current (12 VDC) power input. This power may come from various sources.

- From a companion Isco Automatic Wastewater Sampler
- From an Isco rechargeable battery attached to the flow meter (nickel-cadmium or lead-acid)
- From an Isco AC Power Supply attached to the flow meter
- From an external 12 VDC battery, such as a deep-cycle marine, or RV type

Low Power Indication

When power to the flow meter falls too low for the unit to operate properly, the message POWER LOST/LOW BATTERY will appear on the top line of the display. When power is lost or falls below operating limits, the flow meter will stop accumulating data, and the internal printer will not print, but the internal battery-backed RAM will save stored data (if any) and the program selections for the flow monitoring program you have entered into memory.

Figure 9. Battery Installed on Flow Meter

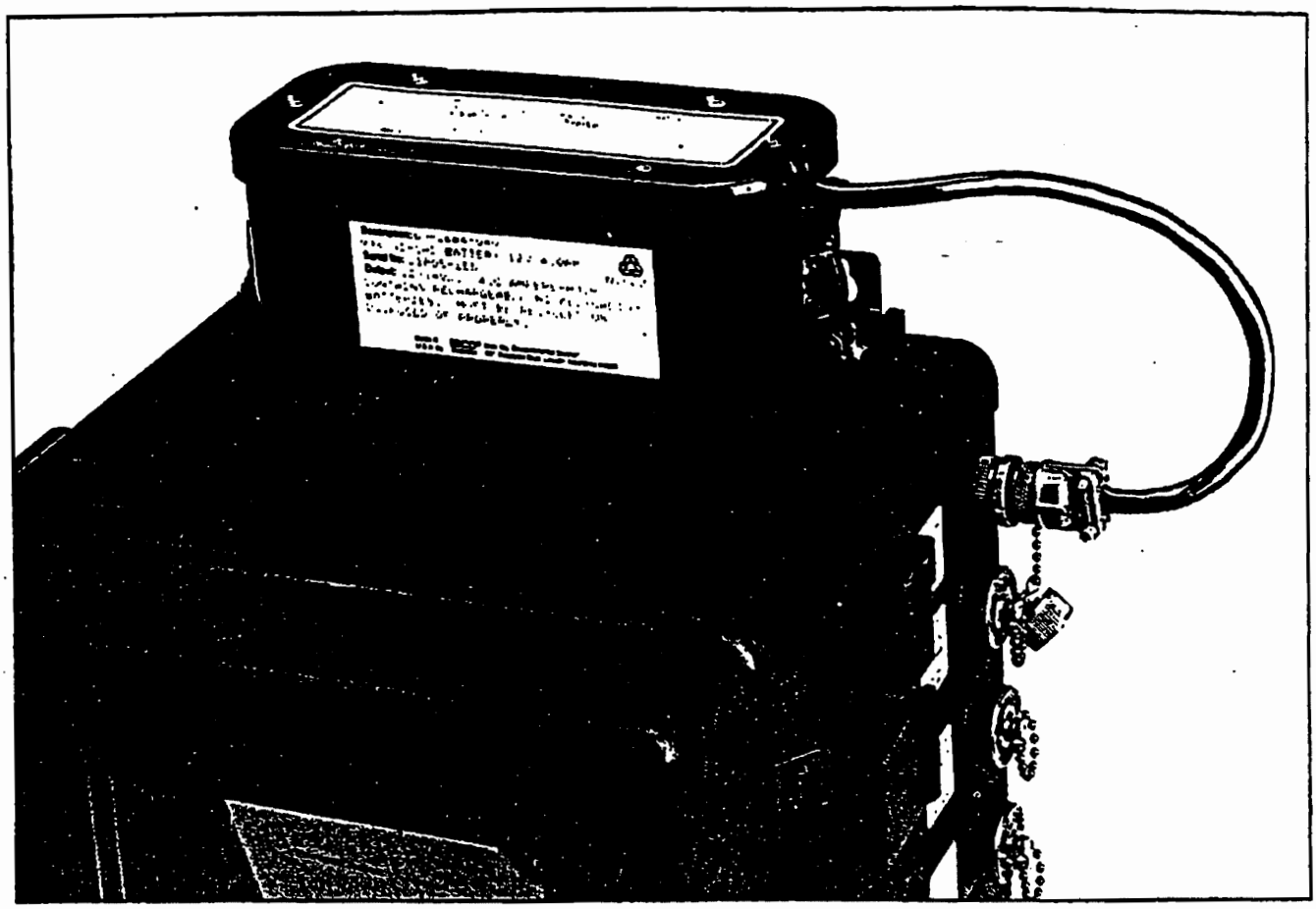

Isco Sampler

If you are using the Model 4210 Flow Meter with an Isco Wastewater Sampler in a flow-proportional sampling system, you can power the flow meter from the sampler's battery or power supply. Connect the flow meter to the sampler with the 6-pin flow meter-to-sampler cable. Use the connectors marked "Flow Meter" on the sampler and "Sampler" on the flow meter. The flow meter will then receive power from the sampler. Keep in mind that under certain conditions, such as a "fast" setting on the internal printer's chart speed, the flow meter will draw a significant amount of power from the sampler. While this is no problem for samplers and flow meters powered by an AC power pack, there could be problems when you are using a battery. In that case it would be preferable for the flow meter to have its own battery.

NOTE

Do *not* attempt to run a sampler from a power source installed on a flow meter. The sampler's pump draws heavy current, particularly on start-up. The connect cable cannot carry such currents. If you are using a single power source, always install it on the sampler.

Isco Nickel-Cadmium Battery

Isco offers a 4-ampere-hour 12-volt rechargeable nickel-cadmium battery to power the flow meter. Isco packages this battery specifically for use with Isco flow meters and samplers. Refer to the ***Power Products Guide*** accompanying this manual for detailed information about this battery and the procedure for charging it.

Attaching the Nickel-Cadmium Battery

Install the battery on the top of the flow meter case, and attach its connector to the 12 VDC connector on the side of the flow meter. Place the battery with its cable pointing toward the right side of the cabinet. Secure the battery by stretching the two rubber draw catches on top of the flow meter until they slip over the two metal "U" brackets mounted on the ends of the battery case. Then screw the battery connector into the top mating connector on the right side of the flow meter case.

Isco Lead-Acid Battery

Isco also offers a 6.5 ampere-hour 12-volt rechargeable lead-acid battery to power the flow meter. This battery is similar in size to the nickel-cadmium battery, except somewhat taller, reflecting its 50% greater capacity.

Figure 10. Power Supply Installed on Flow Meter

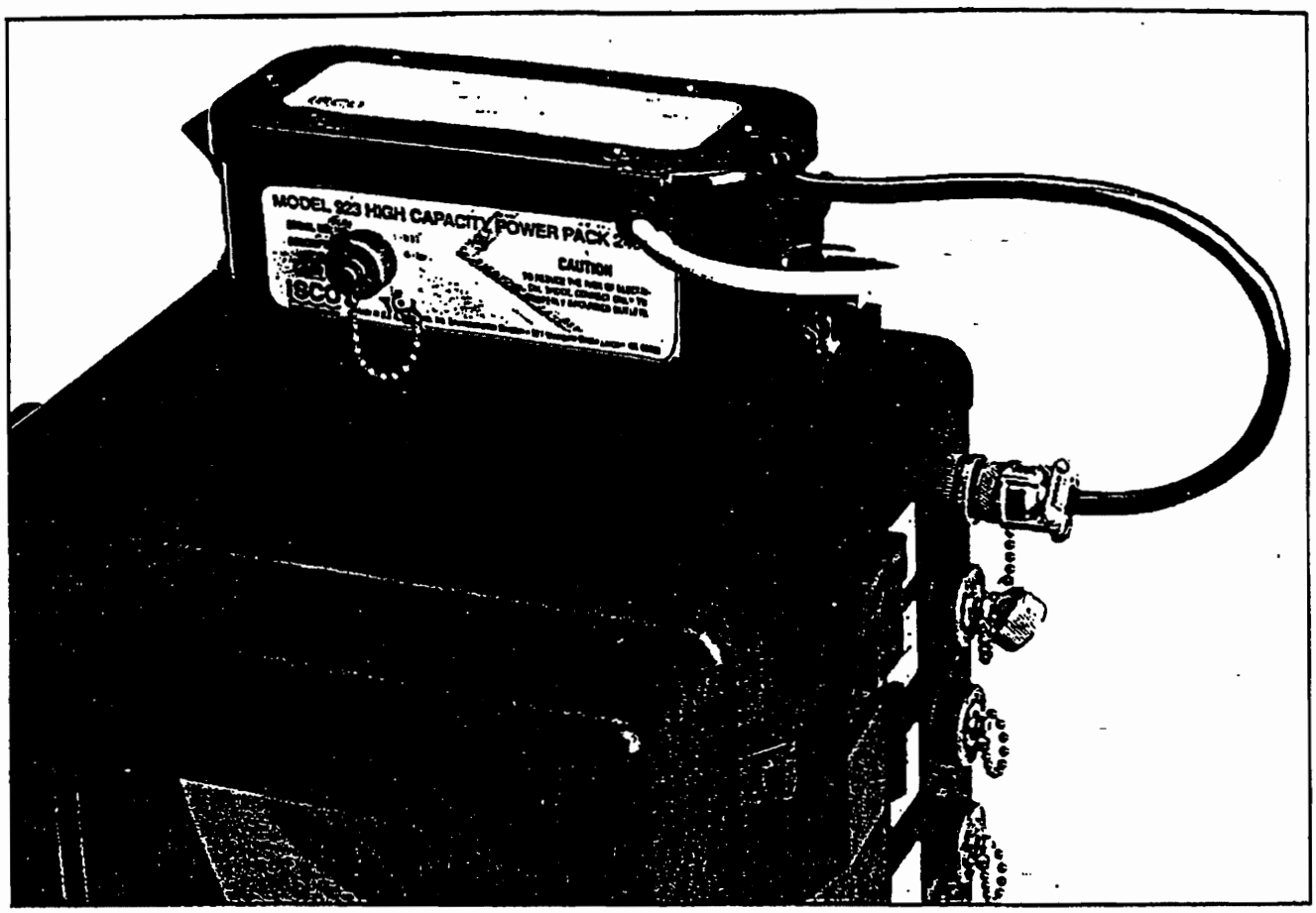

For those familiar with nickel-cadmium batteries, operation and maintenance of lead-acid batteries differs somewhat. Fewer charge-discharge cycles are possible, and a single deep discharge can ruin a battery. There is a linear voltage decrease as the battery discharges, while nickel-cadmium batteries show essentially the same voltage throughout discharge. Failure to recharge promptly can also ruin the battery. Proper operation is necessary for normal service life. For detailed information on these batteries refer to the ***Power Products Guide.*** Read that manual if you intend to use lead-acid batteries on your flow meter.

CAUTION

Do *not* test either battery for its charge condition by "sparking" the output (shorting the terminals together with a screwdriver or other tool).

Attaching the Isco Lead-Acid Battery

The lead-acid battery installs the same way as the nickel-cadmium battery. Place the battery on top of the case and secure it with the rubber draw catches. Attach the connector to the flow meter. If your flow meter is permanently installed, you may need to allow extra clearance above the flow meter for the slightly greater height of this battery.

AC Power Supplies

Isco also offers two different AC power supplies, the **High Capacity Power Supply** and the **Battery-Backed Power Supply** to power the flow meter. These power supplies are designed for operation from 120 VAC, 50/60 Hz commercial power sources. Alternate versions, designed for operation from 240 VAC, 50/60 Hz are also available and are intended primarily for export. Both are supplied with a line cord for convenient attachment to the AC power source, and are capable of operating the flow meter. The Battery-Backed Power Supply provides 12 VDC at 5 Amps, and is backed up by a 1.2 Ampere-hour nickel-cadmium battery. This is built in a package the same size as the standard power supply, and is intended for use where short-term power interruptions are frequent but unacceptable for flow meter operation.

Attaching the Power Supply

Mount the power supply on top of the flow meter cabinet the same as described for the battery. Secure the power supply with the two rubber draw catches pulled over the brackets on the ends of the case. Attach the short cable with the smaller con-

nector to the top connector on the right side of the flow meter case. Connect the longer cord with the plug on it to an AC outlet. Refer to ***Power Products Guide*** for details concerning charging the batteries with the power pack.

External 12 Volt Direct Current Source

You can also power the flow meter from an external 12 VDC source, such as an automotive, motorcycle, or marine battery. Many people have found that a deep-cycle marine/RV battery is particularly well-suited to this application. However, you will have to mount batteries of this type externally, as they are too large to fit on top of the flow meter. Isco offers a special optional connect cable to power the flow meter from a separate battery.

Mount the battery securely, ***in an upright position***, so it will not inadvertently tip over, or have its cable easily pulled off. As advised previously for the nickel-cadmium battery, ***do not*** check the charge condition of lead-acid batteries by "sparking" the output cables (momentarily shorting the wires together).

CAUTION

Be sure of proper polarity before attaching clips to the battery. Never connect the flow meter to a source of unknown polarity or voltage. If in doubt, check with a reliable DC voltmeter. Never connect the flow meter directly to an AC power source of any voltage under any circumstances. Charge the battery in accordance with the manufacturer's instructions.

3. Flow Meter Mounting and Installation Procedures

Because the Model 4210 Flow Meter is a portable device, it may or may not be permanently installed. You can suspend the flow meter in temporary installations, such as sewers, or mount it permanently in other installations, such as treatment plants, at your option.

Carrying Handle

To assist in carrying the flow meter, a handle is provided in the instrument's accessory package. To use the handle, the handle hooks should be snapped into the two brackets at the top of either side of the flow meter case.

Location of the Flow Meter

Because it uses an ultrasonic level sensor, the Model 4210 Flow Meter does not have to be mounted directly above the primary device, or even close to the flow stream. You can install the flow meter itself at a convenient, protected location and route the sensor cable to the place where the level sensor is mounted. For example, the flow meter may be mounted above the surface of the ground for protection and easy accessibility, and then the manhole has to be entered only once, for ultrasonic level sensor installation and calibration.

The standard cable length for the ultrasonic level sensor is 25 feet. A 25-foot extension cable is available that will extend this distance to 50 feet. You can order an extension cable that will be custom-built in lengths up to 1,000 feet. This is not a standard product. Operation of the ultrasonic level transducer beyond 1,000 feet is not recommended.

No Special Mounting Requirement

The Model 4210 does not have any special requirements for mounting. It may be located on any relatively flat surface either horizontally, supported by the two mounting pads and the stainless steel mounting bracket, or vertically, supported by the two plastic rails on the bottom of the case. The flow meter may also be panel mounted, using the mounting bracket on the top rear of the case or suspended from a ladder rung or hook using the optional suspension harness. To use the suspension harness, the carrying handle should first be installed on the flow meter as described above. Then slip the loops on the ends of the harness cables onto the handle hooks. The flow meter may now be suspended using the harness.

Safety Considerations

In field installations of Model 4210 Flow Meters and associated equipment, the safety of the personnel involved should be the foremost consideration. No project is so important or deadline so critical as to justify the risk of human life. Refer to the sections on working safely in manholes and avoiding hazardous gases; these sections are found at the back of this manual.

WARNING

The Model 4210 Flow Meter has not been approved for use in "hazardous locations" as defined by the National Electrical Code.

4. Error Factors Affecting Performance of the Ultrasonic System

It is possible for the ultrasonic measurement system to be in error due to the influence of various factors on both the initial pulse and reflected sound wave. It is important that you understand these factors and take them into consideration when planning an installation. Proper installation will result in more accurate measurement.

Figure 11. Flow Meter Suspended by Harness

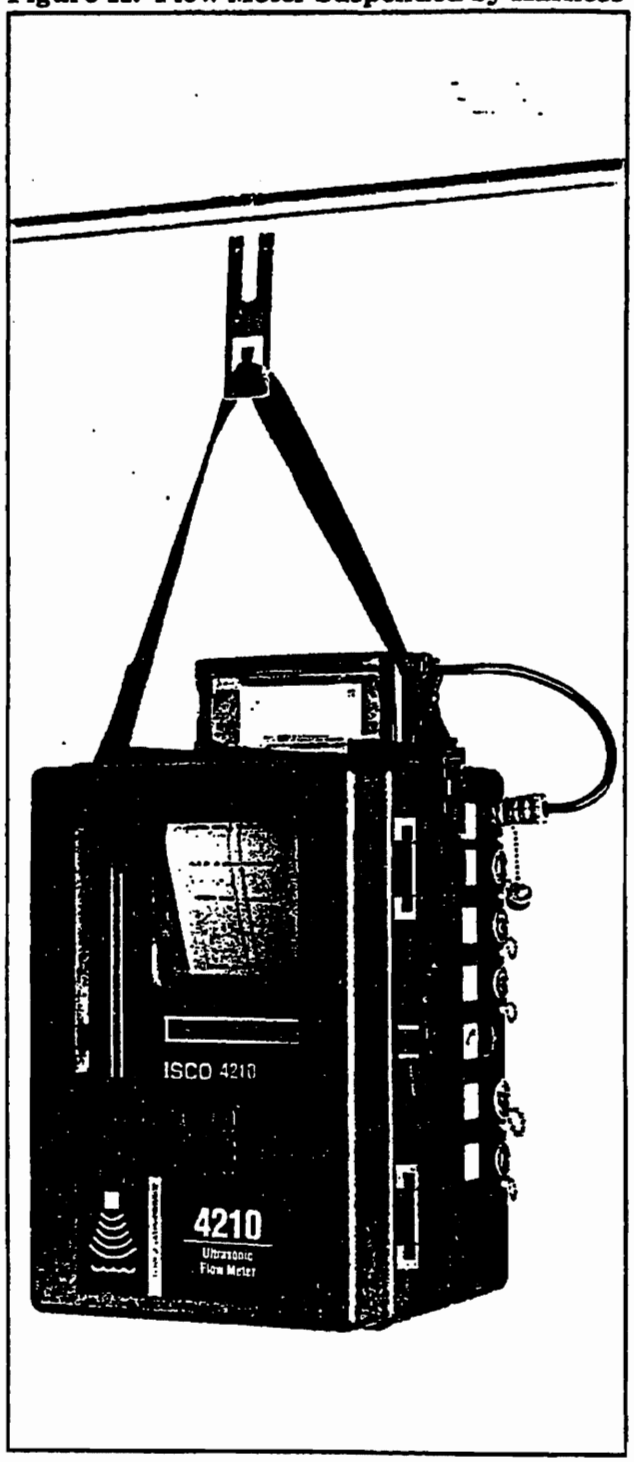

The factors affecting the ultrasonic system may be grouped broadly into two classes.

(1) Velocity Errors

These errors occur when the flow meter is unable to accurately calculate the velocity of sound. Without going into the cause, it may be said that they are proportional errors, in that the error increases as the distance between the ultrasonic level sensor and the liquid surface increases.

(2) Echo Detect Errors

These errors come from problems the flow meter may have measuring the time between transmitting the ultrasonic pulse and receiving the echo. Anything that can absorb the sound causes these errors. This makes the echo amplifier detect the returned signal either later or earlier than intended by the design of the ramp-gain amplifier. These errors will generally be of an absolute nature; they will not be affected to any extent by the distance between the transducer and the water.

Error Factors and Flow Meter Compensation

Following are specific factors affecting the accuracy of the Model 4210 Flow Meter and the measures provided for compensation of the more significant factors.

Barometric Pressure

The velocity of sound is almost independent of barometric pressure. Changes in barometric pressure provide no significant cause of error.

Beam Angle

The flow meter must only respond to surfaces within a specific area. The transducer can only "see" items inside a cone whose apex (point) is the ultrasonic transducer. The beam angle is the angle across this cone. If the beam angle is too wide, the flow meter will detect unwanted surfaces, such as the walls of the channel. If the beam angle is too narrow, setup of the installation is difficult and the flow meter may never detect an echo. The Model 4210 uses a beam angle of 8°.

Humidity

The velocity of sound varies only slightly with humidity (maximum 0.35% at 68° F). Because the effect is small, the Model 4210 does not provide any compensation for humidity. Humidity, however, does have an effect on the reduction of the sound. Under conditions of extremely high or low humidity, the reduction of the sound wave may be inconsistent with the characteristics of the ramp-gain amplifier. This can cause an echo detect error.

Noise

Background noise can interfere with the operation of the flow meter. You must filter this noise out, or the flow meter may trigger on noise rather than the echo. The Model 4210 uses a ***tuned circuit*** to filter unwanted noise outside the operating frequency. Noise in the operating frequency range (around 40 kHz) can render the system unstable. Software algorithms eliminate most sporadic noise pulses occurring within the flow meter's operating frequency range.

Surface Objects

Objects or foam floating on the surface of the flow stream can absorb or weaken the ultrasonic pulses. If the pulses are reduced enough there will be no echo. In less severe cases, the flow meter may experience an echo detection error.

Temperature

The velocity of sound at a given temperature may be approximated by the following equation:

$$\text{Velocity} = \sqrt{1050 \times [1 + (\text{Temperature } 459.67)]}$$

...Where Velocity is in feet per second and Temperature is in degrees F.

Temperature changes have a significant effect on the velocity of sound (approximately 7% between 32°and 104°F). Consequently, the Model 4210 provides temperature compensation. There is a temperature sensor embedded in the housing of the ultrasonic level sensor. However, the temperature of the transducer, level sensor, and air may not be exactly the same, and the temperature sensor cannot measure temperature perfectly. As a result, the equations used to calculate the velocity of sound in air are approximations, including the equation shown above.

Waves

Waves on the surface of the flow stream can deflect the sound energy so it does not return to the transducer. Waves can also cause the sound to return to the transducer by an indirect path. In the first case, the flow meter will not receive an echo; in the second case, the additional time lapse will cause an echo error, indicated by an incorrect level reading. The Model 4210 employs a software algorithm to reject occasional readings that deviate substantially from normal. However, if the waves are severe, the flow meter will not function and will indicate a "no echo" condition.

Wavelength

You can determine the wavelength of sound by dividing the velocity of the sound by the frequency. The frequency of the Model 4210 is about 40 kHz. The length of a 40 kHz sound wave is found by dividing 1,125 by 40,000 which is 0.02815 feet or 0.3378 inches.

Under ideal conditions it is possible to detect the same wave front of the returning echo. However, any noise or abnormal attenuation (excessive decrease) may cause the flow meter to detect an earlier or a later wave. When the attenuation of the returned echo does not match the gain slope of the amplifier, the circuit will eventually detect a different cycle of the returned echo as the distance changes. The impact of this wave-detect error is determined by the wavelength. Higher frequencies (shorter wavelengths) produce smaller echo-detect errors. However, higher frequencies are absorbed more rapidly, decreasing the maximum distance that you can measure with the same amount of power. The frequency of 40 kHz was selected for the Model 4210 as a suitable compromise.

Since the sound travels the distance twice (going and coming), the observed error is one-half of the wavelength or 0.014 foot. The Model 4210 uses a rectified detect circuit that can detect either the positive or negative peak. This allows the flow meter to limit the error of proper wave detection to increments of one-half wavelength. This error is 0.007 foot.

Wind

Wind can blow the sound away or significantly reduce the intensity of the returned echo. Narrow beam angles, advantageous for measuring small flow streams, are a disadvantage in this situation. Likewise, greater distances to the surface of the flow stream are more affected by wind.

Obviously, some of these factors have significant impact on the accuracy of the Model 4210 Flow Meter. You should make installations with care.

5. Accessories for the Ultrasonic Level Sensor

Spreader Bar

The Spreader Bar is an expandable pipe that serves as an equipment hanger inside a manhole. Outward spring pressure holds it securely against the walls of the manhole, like a shower curtain rod. You then suspend the Model 4210from the bar.

Ultrasonic Cable Clamp

The cable clamp is used with the Spreader Bar to secure the mounting of the ultrasonic level sensor.

Ultrasonic Wall Mount Bracket

This device lets you install the ultrasonic level sensor on a convenient nearby wall over a flow stream, such as the side of a bridge, or other structure.

Ultrasonic Floor Mount

The Ultrasonic Floor Mount is a collapsible metal stand that you set up at the bottom of a manhole over a flow stream. This device provides a stable mounting for the level sensor for temporary or permanent installations.

Ultrasonic Cable Straightener

The cable straightener is designed for use in installations where the transducer is suspended by its cable only, such as from the Spreader Bar. The straightener helps hold the transducer vertically plumb, thereby stabilizing alignment.

Ultrasonic Calibration Target

This option is designed to make calibration of the level sensor more accurate during the installation process by letting you calibrate the level sensor from outside the manhole.

Ultrasonic Sunshade

The ultrasonic sunshade is a white plastic cap that fits over the top of the ultrasonic transducer. Its purpose is to keep sunlight from heating the body of the level transducer and introducing temperature errors to the internal temperature compensation.

Extension Cable

Isco offers a 25 foot (7.6 m) extension cable to connect to the ultrasonic level sensor. Do not attempt to cut or splice cable lengths. Coil any extra cable neatly by the flow meter. The level sensor is supplied with a 25 foot cable, so with the extension you can mount the level sensor as far as 50 foot (15.2 m) from the flow meter. Other lengths of cable can be ordered, up to 1,000 feet, but this is a custom product. For special lengths of cable, consult the factory. The maximum distance between the level sensor and the flow meter is 1,000 feet.

6. General Mounting Considerations for the Ultrasonic Level Sensor

The location of the ultrasonic level sensor depends on the method of level-to-flow rate conversion you are using. The Model 4210 is usually installed with some type of primary measuring device, such as a weir or flume. The location of the ultrasonic level sensor over the primary device depends on the type of primary device used. Most primary devices have a specific place intended for the head (level) measurement device. For example, the head measuring point of a weir is at least three times the expected maximum head upstream from the weir plate. For Parshall flumes, the measuring point is ⅓ of the way into the converging section. For Palmer-Bowlus flumes, the measuring point is at least ½ pipe diameter upstream from the entrance to the flume. Refer to the ***Isco Open Channel Flow Measurement Handbook*** or to information provided by the manufacturer of the primary device for more details about the location of the head measuring point.

User-Determined Mounting Location

If you intend to measure flow by some other means, such as a gravity flow equation (Manning) or by calibrating a section of the flow channel, you will have to determine the location of the ultrasonic level sensor. You should base this location on the hydraulic characteristics of the site and the method of level-to-flow rate conversion used.

NOTE

In open channel installations, where flow may exceed one-half of full pipe, you *must* place the transducer as close as possible to the midpoint between the pipe entrance and exit of the U-Channel to ensure sensing over the least turbulent flow.

"Dead Band"

Mount the ultrasonic level sensor as close to the maximum expected level as possible. This minimizes many of the undesirable characteristics of ultrasonic distance measurement. However, you ***must*** mount the ultrasonic level sensor at least two foot higher than the maximum expected level. This is a result of the two foot "dead band" directly below the level sensor where no measurements can be taken.

Accidental Submersion Harmless

Since both ends of the ultrasonic level sensor are completely sealed, temporary submersion in the flow stream should not cause any harm, if that should accidentally happen. However, you should avoid prolonged submersion. You should also realize that submersion will keep the level sensor from working, even if it is not damaged. Prolonged submersion or submersion in dirty or greasy flow streams may cause the surface of the transducer to become coated with solid matter. This could cause it to malfunction until it is cleaned. If possible, mount the ultrasonic level sensor high enough above the flow stream to avoid submersion under normal circumstances.

Mounting the Ultrasonic Level Sensor

You can mount the ultrasonic level sensor over the flow stream in various ways. It is up to you to determine which method best fits the application. Mounting examples are shown in the illustrations. The ultrasonic level sensor has a ¾" male pipe thread with a conduit lock nut to connect it to a mounting bracket or cable stiffener. An optional mounting bracket is available from Isco to mount the ultrasonic level sensor. You can also run the ultrasonic level sensor cable through conduit to the flow meter.

Figure 12. Ultrasonic Level Sensor "Dead Band"

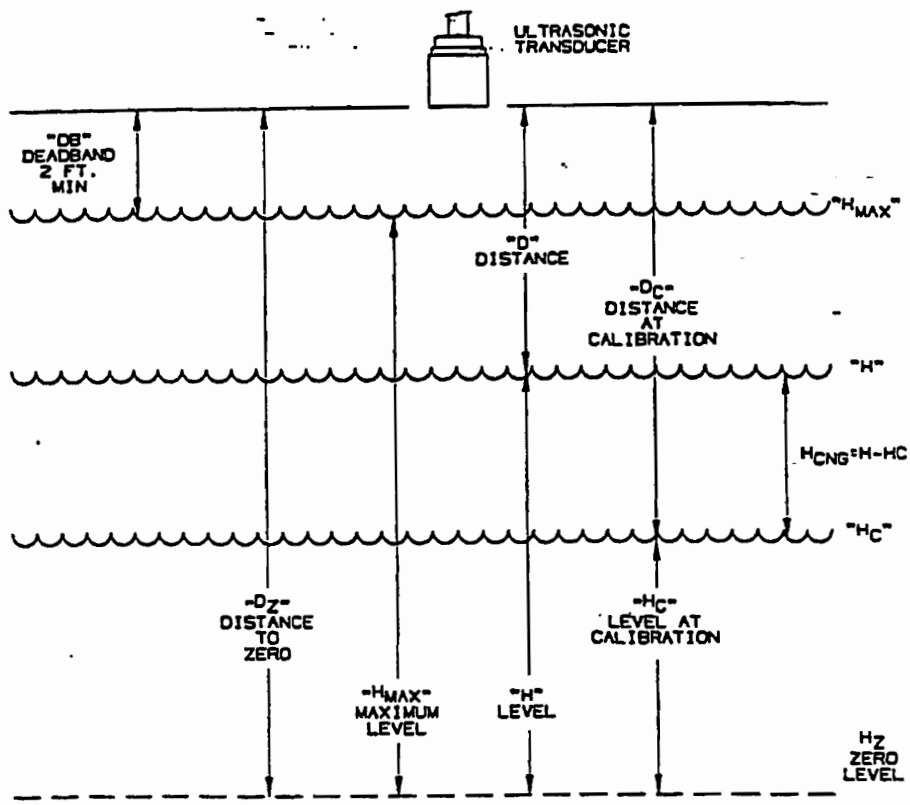

DEAD BAND: The non-useable distance (2 feet) between the level sensor and the liquid surface. This requires that at maximum level the liquid surface be at least 2 feet from the level sensor.

DISTANCE "D" is the distance from the level sensor to the liquid surface. For the Model 4210, distance can be from 2 to 12 feet.

"Dc" is the distance from the level sensor to the liquid surface at the time that the level "H" was calibrated.

"Dz" is the distance from the level sensor to the zero level **"Hz"** of the primary device. Note that errors caused by the velocity of sound will be multiplied by the distance from the level sensor to the liquid surface **"D."** As the distance **"D"** increases, the possibility of error increases.

LEVEL: The depth of water above the primary device's zero level **"Hz"** point. May also be referred to as **HEAD.** In the manual, "level" and "head" are interchangeable terms. The Model 4210 calculates level using the following formula: **H = Dz – D.**

"Hc" is the level when the flow meter was calibrated.

"H" is the level at the present time. **"H"** is shown above **"Hc."** However, if the level had dropped after calibration, **"H"** would be below **"Hc."**

LEVEL CHANGE "Hcng": is the change in level over time. The maximum change in level that the Model 4210 can detect is 10 feet. **Hcng = H – Hc.**

MAXIMUM HEAD "Hmax": is the maximum level that the flow meter can measure. For the Model 4210, this is limited to 21 feet or less. Since the largest level change the model 4210 can sense is 10 feet, the unit will have a minimum level of greater than 0 feet if the maximum level is greater than 10 feet.

TEMPERATURE: Since temperature significantly affects the velocity of sound, temperature measurement is made by the Model 4210 Flow Meter to provide compensation.

CALIBRATION TEMPERATURE "Tc": is the temperature at the level sensor at the time the system is calibrated. (Not shown on drawing.)

TEMPERATURE CHANGE "Tcng": is the change in the temperature after the head was calibrated. **Tcng = T – Tc.** Note that the temperature is used to calculate the velocity of sound in air, which is used to calculate the distance **"D"** to the liquid surface, and the head. Any error in the temperature **"T"** causes an error that is proportional to the distance **"D."**

Figure 13. Mounting the Ultrasonic Level Sensor

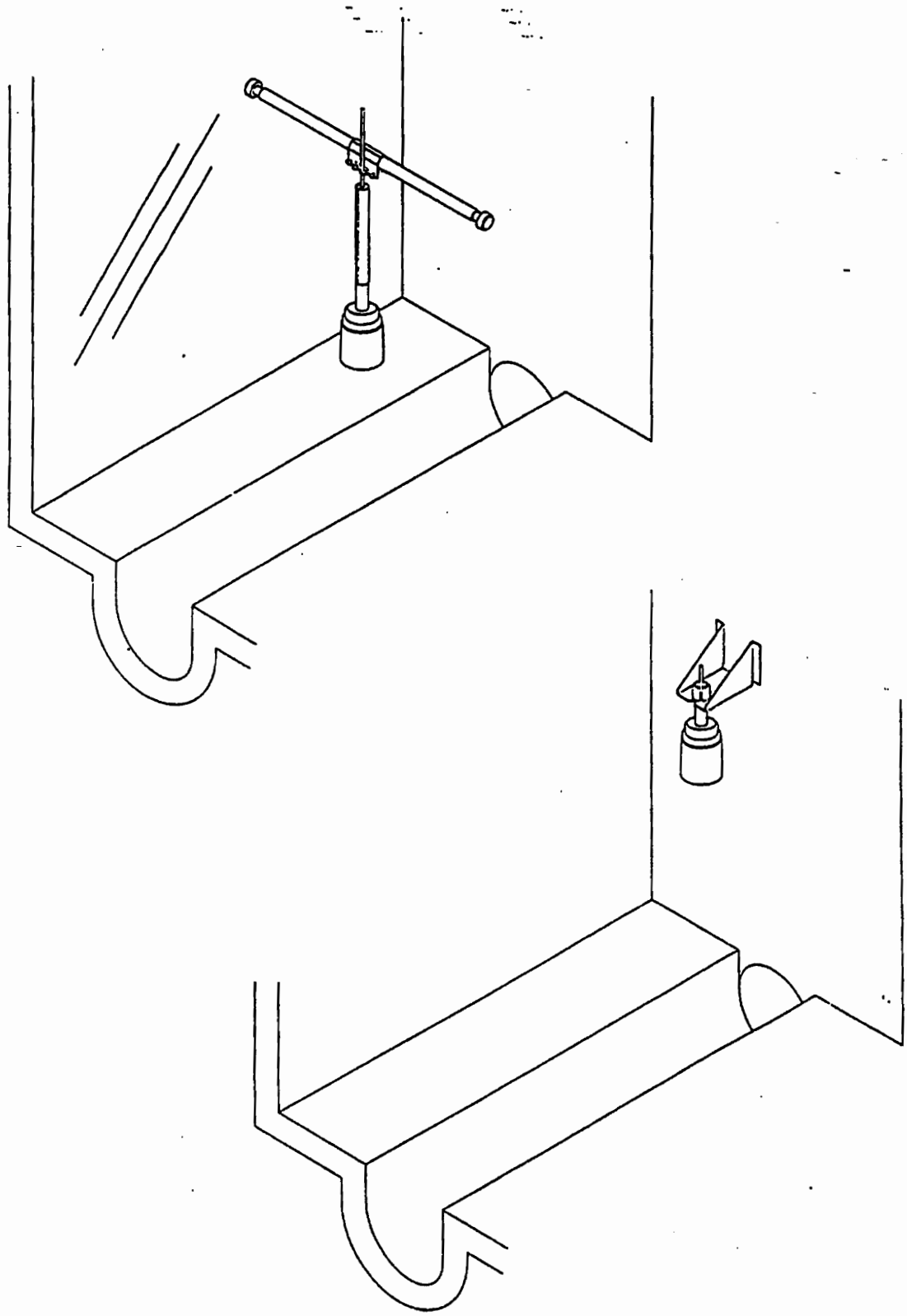

Figure 14. (Continued) Mounting the Ultrasonic Level Sensor

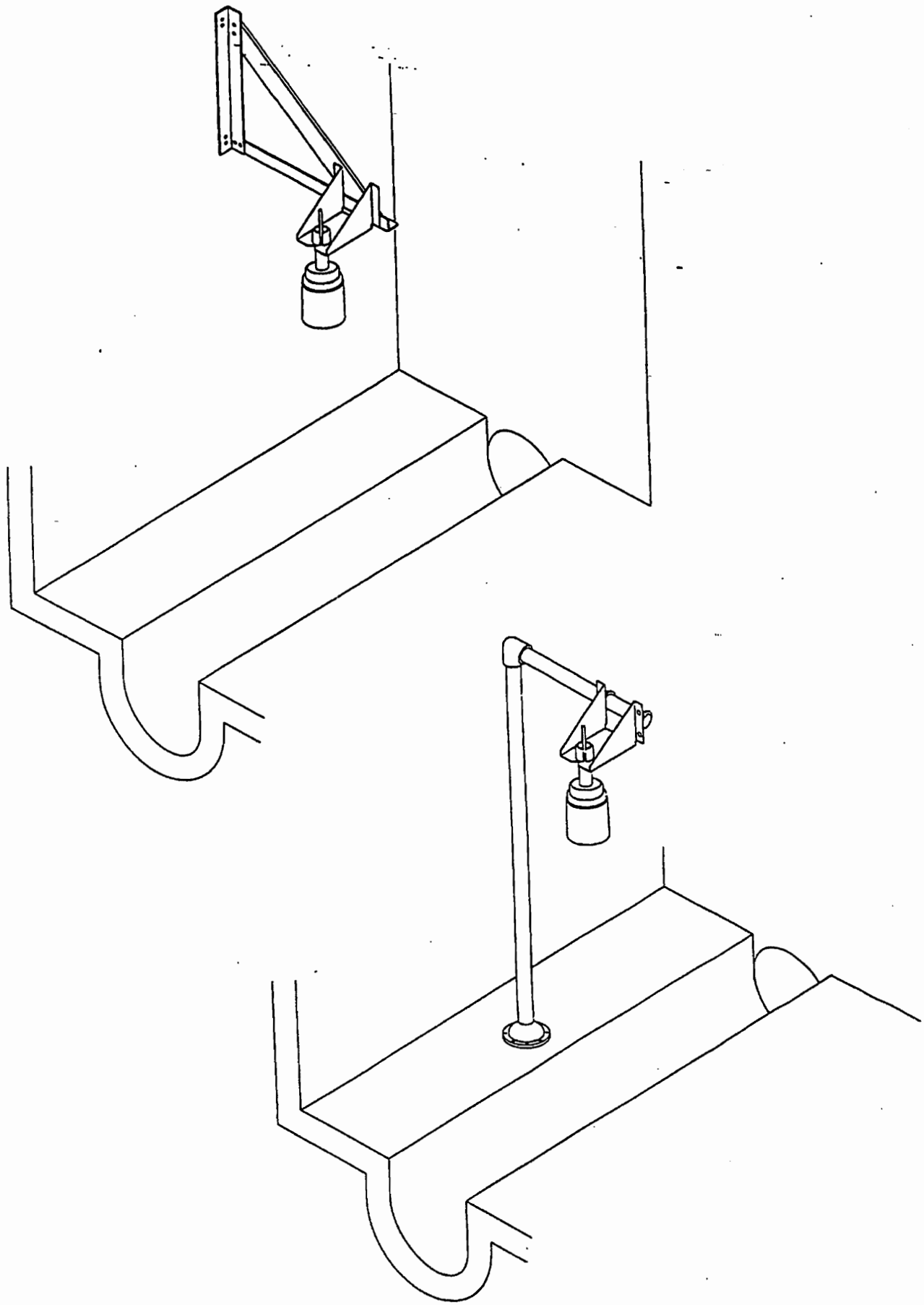

Simple Suspension of the Ultrasonic Level Sensor

In addition, in ***stable, indoor*** environments, you can simply suspend the ultrasonic level sensor from its cable. The previously-described ***Cable Straightener***, which is weighted, and which forces the ultrasonic level sensor to hang plumb, is available to help in this mounting method.

Use a Level

When you mount the ultrasonic level sensor, place it over the center of the flow stream and use a circular bubble level to align it vertically. This is very important, since misalignment may result in erratic or erroneous level readings, resulting from the echo bouncing off the walls of the channel.

Use the Variable Blanking Feature

In step 1 of the program, select SETUP, then under setup, select Measurement. Under measurement there is a menu called VARIABLE BLANKING. If you select VARIABLE BLANKING, the following will appear:

VARIABLE BLANKING DISTANCE = *XX.XX* FT *(or meters)*

You can determine this distance approximately by measuring from the face of the (installed) ultrasonic level sensor to the surfaces of the channel just above the maximum expected liquid level. This value tells the flow meter to ***ignore*** any echo reflected from this distance or less.

The purpose of this selection is to let you fine-tune the reflection cone beneath the ultrasonic level sensor. If the level sensor is mounted too high above the flow stream, there is a good chance echoes will be reflected from the channel walls, tops, sides, or other solid surfaces, that have nothing to do with the actual liquid level.

Proper selection of a value here will ensure that echoes selected by the flow meter as valid will only come from the surface of the flow stream, not the walls or sides of the channel.

Use the Signal Strength Reading

In step 1, SETUP, there is a menu called STATUS. If you select this menu, the flow meter will display the Model number, software revision, etc. If you press **Enter** again, the following will appear:

SIGNAL STRENGTH *X*%

This number indicates the strength of the ultrasonic return echo. A number of 1 indicates a very weak return echo. A number of 100 indicates a very strong return echo; generally speaking, the higher the number the better. Typical values will range from 30 to 100. You should adjust the ultrasonic level sensor for the ***highest number*** here. If the flow meter and the level sensor are installed a considerable distance from each other, you will need an assistant to either watch the reading on the flow meter or adjust the level sensor.

Minimizing Level Measurement Errors

In order to minimize measurement errors with the Model 4210 Flow Meter, the following precautions should be observed in the installation of the ultrasonic level sensor. These are listed in the approximate order of their significance. Factors affecting accuracy of the ultrasonic technique were discussed in the beginning of this chapter.

Avoid Temperature Differences

Avoid installations where the ultrasonic level sensor will operate at a different temperature than the air between the level sensor and the flow stream through which the ultrasonic beam passes. The reason is that the temperature sensor mounted in the ultrasonic level sensor is intended to provide the flow meter with temperature readings taken from the surrounding air. If the ultrasonic level sensor operates at a different temperature than the surrounding air, the flow meter's temperature compensation will be based on the temperature of the level sensor rather than the surrounding air. This will lead to significant errors.

Use a Sunshade in Outdoor Applications

This situation is most likely to occur where the ultrasonic level sensor is installed outside and is directly exposed to the sun. In such installations, a sunshade should be provided to keep the sun from shining directly on the level sensor, as sunlight will raise the temperature of the level sensor's housing significantly higher than the surrounding air temperature.

Serious Errors Possible

Errors caused by the ultrasonic level sensor operating at a different temperature than the ambient can be quite serious. For example, with a distance of only two feet and a temperature difference of 35° F, the level error is:

$$\text{Level Error} = 0.001 \times 35 \times 2 = 0.070 \text{ foot}$$
(about 1 inch)

Temperature differences between the ultrasonic level sensor and the flow stream surface will lead to velocity errors because the ultrasonic level sensor is at a different temperature than the air. Also, air layers of different temperatures between the level sensor and the flow stream surface will cause

an abnormal reduction in the strength of the ultrasonic pulse. (The flow meter is designed to interpret the ***normal*** pulse correctly, not an ***abnormal*** one.) This may lead the flow meter to detect the wrong wave and introduce a wave detect error.

Avoid Wind Currents

As much as possible, the ultrasonic level sensor should be installed in a location protected from air currents. Wind reduces the strength of the ultrasonic pulse and echo. This causes the flow meter to have difficulty detecting the proper wave in the echo, resulting in a wave detect error. In severe cases, it is possible for the flow meter to lose the echo completely.

Avoid Excessive Distances Between Level Sensor and Flow Stream

Although the ultrasonic level sensor cannot be mounted closer than two feet from the maximum level of the flow stream, it is recommended that the mounting be kept as close to the twelve inch limit as possible. The reason is that the error made by the flow meter in calculating the velocity of sound in the air is multiplied by the distance from the level sensor to the surface of the flow stream. Minimizing the distance will minimize the error.

Calibrate at "Expected" Temperature

The user should calibrate the level reading under temperature conditions as near as possible to those expected during operation. For small changes of level, the error due to temperature is determined by the product of the distance (from the transducer to the flow stream surface) and the temperature change. Calibrating the flow meter at the same temperature as the expected operating temperature will minimize this error.

Avoid Water Condensate

The ultrasonic level sensor will not operate properly if the bottom surface collects water droplets. This may occur if water condenses on the transducer surface as a result of high ambient humidity. Some users have found that mounting the ultrasonic level sensor horizontally and aiming it at a 45° angled reflector will keep water from collecting on the level sensor's radiating surface.

Avoid Foam, Oil and Turbulence

If the flow stream surface is absorbent (such as with foam) or very irregular (such as highly turbulent water), the ultrasonic echo may not be correctly reflected back to the ultrasonic level sensor. This can result in a false measurement or no measurement at all. If the foam is reflective, the system will detect the top of the foam rather than the liquid surface. Also, if grease or oil is floating on the flow stream surface, it will be detected rather than the liquid surface. (See illustration.)

Small Pipes and Channels

Small circular pipes, narrow channels, and small flumes may also cause problems with ultrasonic distance measurement. Since the ultrasonic pulse expands outward at a beam angle of approximately 10° as it travels away from the ultrasonic level sensor, it may strike the sides of a channel or the sloping sides of a circular pipe with low flow. This can result in false echoes and incorrect level readings. The term "small channels" generally refers to "U" shaped channels and pipe inverts 10" in diameter and less. The term "small flumes" generally refers to 1" and 2" Parshall flumes. It should be noted that the level measuring point for many types of flumes (Palmer-Bowlus, Leopold-Lagco, etc.) is not in the flume, but upstream in the invert of the pipe; for these types of flumes the section of interest is in the pipe invert, not in the flume itself. Thus, care should be exercised in the use of 10" or smaller Palmer-Bowlus and Leopold-Lagco flumes. (See illustration.)

Determining Suitability

The channel to be measured can be "pre-qualified" by a simple equation that will determine whether or not the channel is wide enough to allow correct positioning of the ultrasonic sensor. Since the beam angle is 8°, the equation is:

$$\text{Minimum Width} = 0.14 \times \text{Distance}$$

Where Distance is the distance from the bottom of the ultrasonic level sensor to the minimum expected level.

Alternative Flow Measurement Systems

Because of the characteristics of ultrasonic liquid measurement, there may be some installations where the ultrasonic method is either unreliable or inaccurate. In these instances it is worthwhile to consider use of the submerged probe level sensor (Isco Model 4220 Flow Meter) use of the bubbler technique (Isco Model 4230 Flow Meter), or use of the area-velocity technique (Model 4250 Flow Meter). Information on these companion units to the Model 4210 is available from their respective manuals or from the factory. Call for more information.

7. Associated Equipment

You can use the Model 4210 Flow Meter with a variety of other equipment. The following sections give instructions for connecting other equipment to the Model 4210.

Isco Sampler

One of the uses of the Model 4210 Flow Meter is to control a sampler in a ***flow-proportional sampling*** mode. Flow-proportional sampling means that the flow meter is programmed to signal the sampler to take a sample after a specific volume of flow has passed through the flow stream, rather than after a period of time. In this way, the sampler and flow meter are able to compensate for varying flow rates. You can use the Model 4210 Flow Meter with any of the Isco Samplers listed in **Chapter 1**

An optional 25 foot (7.6 m) long connect cable is available to connect the flow meter to the sampler. Attach the six pin female connector on the cable to the SAMPLER connector on the side of the flow meter. (This is the second connector from the top.) Attach the connector on the other end of the cable to the FLOW METER socket on the sampler. The flow meter will then be connected to the sampler's power supply, and the sampler will be able to receive flow-proportional signals from the flow meter. Refer to the sampler manual for further details.

NOTE

The flow meter-to-sampler connect cable has been changed. It now has six wires. This new cable ***must*** be used if it is desired to use the software "Sampler Enable" feature. Previously available cables will not allow this feature to work. Pin "F" is not connected; this pin may be checked with an ohmmeter. A "new" cable will show continuity (zero ohms) between the two "F" pins; an "old" cable will show open.

Connection to Other Isco Equipment

Isco manufactures a variety of useful accessories for use with the Model 4210 Flow Meter. Among these options are: two different types of modems, single and multiple parameter sensors, an alarm relay box, a tipping bucket rain gauge, a 4-20 mA output device, software, and a mechanical totalizer.

These options are all described in **Chapter 4.** Information about using them with the Model 4210 is provided there.

CHAPTER 4

1. Optional Equipment

This chapter describes accessories available for use with 4200 Series Flow Meters. There are two groups of accessories. One group of options you can use with any of the 4200 Series. The other group are accessories for a specific type of level sensing and can only be used with one flow meter of the series. This chapter covers the accessories that are usable with any 4200 Series Flow Meter. Application-specific options are covered in the **Installation** chapters of each type of flow meter.

Isco offers the following options for use with all 4200 series flow meters:

- 4200T and 3200SH Modems
- Internal and external 4 - 20 mA Outputs
- Model 674 Tipping Bucket Rain Gauge
- FLOWLINK® Software (used with the modem or a laptop computer)
- Parameter Probes - Temperature, pH (acidity/alkalinity) and D. O. (dissolved oxygen)
- Mechanical Totalizer
- External Serial Device/Model 2312 Plotter
- High-Low Alarm Relay Box
- YSI 600 Multi-Parameter Sonde

User-Installed Options

The 4 - 20 mA Output Interface, alarm box, rain gauge, parameter probes are options you can field-install any time. The modems require factory modification to the flow meter, and you should specify these options when you order. If you want to add any of these later, you will need to return the flow meter to the factory.

2. 4200T Modem

The 4200T Modem is a circuit board installed inside the flow meter that transmits flow meter data over standard telephone lines. The modem also makes it possible for the flow meter to receive data from compatible equipment at the other end of the phone line. Modems allow digital equipment to "talk" and "listen" to other remotely-located digital equipment over telephone lines.

How it Works

The analog phone system cannot transmit digital signals through repeaters; digital machines cannot communicate directly over phone lines. Modems convert the data into tones and transmit them over phone lines. The equipment on the other end of the line answers with tones through its modem. The first modem converts these tones back to digital data and interprets it. The 4200T Modem is full duplex and works in the auto-answer mode. It operates at 300/1200/2400 baud. This modem has speech and tone capabilities and comes with a connect cable to attach to the telephone line.

Modem and FLOWLINK Software

The 4200T Modem communicates with Isco's FLOWLINK data storage and acquisition software, setting up the flow meter to collect blocks of data. FLOWLINK allows storage and interpretation of flow meter data. Other FLOWLINK software packages can write reports with this collected data.

Connection to a Line

The FCC (Federal Communications Commission) governs communications over telephone lines. Your local telephone company will provide you with the line between the flow meter and the computer. Call them for connection information. ***The FCC requires the following information be published for connecting the modem to the phone line.***

NOTE

"This equipment complies with part 68 of the FCC rules. On the case of this equipment is a label that contains, among other information, the FCC registration number and ringer equivalence number for this equipment. If requested, this information must be provided to the telephone company."

"This equipment uses the following USOC jacks: USOC RJ11C.

"The REN is used to determine the quantity of devices that may be connected to the telephone line. Excessive REN's on the telephone line may result in the devices not ringing in response to an incoming call. In most, but not all areas, the sum of REN's should not exceed five (5.0). To be certain of the number of devices that may be connected to the line, as determined by the total REN's, contact the telephone company to determine the maximum REN for the calling area. (more→)

"If this equipment causes harm to the telephone network, the telephone company will notify you in advance that temporary-discontinuance of service may be required. If advance notice isn't practical, the telephone company will notify the customer as soon as possible. Also, you will be advised of your right to file a complaint with the FCC if you believe it is necessary.

"The telephone company may make changes in its facilities, equipment, operations, or procedures that could affect the operation of the equipment. If this happens, the telephone company will provide advance notice in order for you to make the necessary modifications in order to maintain uninterrupted service.

"If trouble is experienced with this equipment, please contact the **Isco Customer Service Department, (800) 228-4373** or, outside the U.S.A., call **(402) 474-2233, 531 Westgate Blvd., Lincoln Nebraska, 68528**, for repair and (or) warranty information. If the trouble is causing harm to the telephone network, the telephone company may request you remove the equipment from the network until the problem is resolved.

"The following repairs can be done by the customer: None.

"This equipment cannot be used on telephone company-provided coin service. Connection to Party Line Service is subject to state tariffs.

"When programming and/or making test calls to emergency numbers:

"Remain on the line and briefly explain to the dispatcher the reason for making the call."

"Perform such activities in the off-peak hours, such as the early morning or late evenings."

Types of Service

The 4200T Modem is compatible with standard telephone lines and comes with a 12 foot cable. The cable connects the flow meter's **Modem** connector to a standard telephone jack, type USOC RJ11C, supplied by the phone company. You must mount the flow meter within 12 feet of this jack.

We are required by the FCC to provide the following notice:

NOTE

"This equipment generates and uses radio frequency energy and if not installed and used properly, in strict accordance with the manufacturer's directions, may cause interference with radio and television reception. There is no guarantee that interference will not occur in a particular installation. If this equipment does cause interference to radio or television reception, which can be determined by turning equipment off and on, the user is encouraged to try to correct the interference by one or more of the following measures."

- Reorient the receiving antenna on the television.
- Relocate the unit with respect to the receiver.
- Plug the unit into a different outlet so the unit and receiver are on different branch circuits.
- If necessary, consult the manufacturer or an experienced radio-television technician for additional suggestions.

You may find the following booklet, prepared by the FCC, helpful: ***How to Identify and Resolve Radio-TV Interference Problems.*** This book is available from the U.S. Government Printing Office, Washington, D.C. 20402, Stock No. 004-00-00345-4.

3. Connection to External Serial Device

Isco offers two serial outputs from 4200 series flow meters. There is a software-enabled output that is transmitted on the RAIN GAUGE connector. This signal also appears on the INTERROGATOR connector. This feature lets the flow meter transmit the most recent values for all currently enabled ports as ASCII text. You can select the baud rate and the frequency of transmission. You can then write a simple program to retrieve this data periodically, or you can do it interactively using a terminal program. This option (SERIAL OUTPUT) is discussed in detail in **Chapter 2**, page 23.

Isco still offers the older 300 baud output for the Model 2312 Plotter at the also on the RAIN GAUGE connector. This port provides ASCII level and flow rate data for remote transmission to any ASCII-compatible equipment. Every 15 seconds the flow meter transmits a line of data which includes level, units of level measurement, percentage of maximum flow rate, maximum flow rate, a total flow value, units of flow, sample number, bottle number, text, time, and date.

If you are using the flow meter with an Isco sampler, the data line also includes an indication of a sampling event.

. 4-20 mA Output Interface

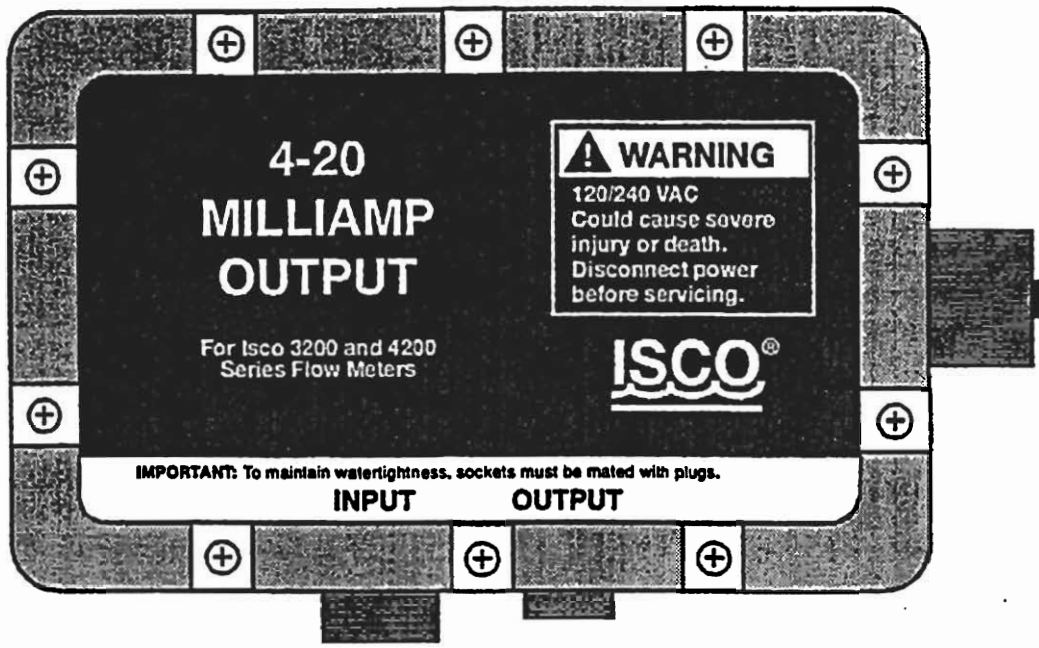

You can transmit this data line to a computer, or to a locally-connected (within 250 feet) device capable of interpreting serial data, such as a video display terminal or a printer. The specifications for this serial data output are as follows: 300 baud, 7 data bits, 2 stop bits, even parity. The printed (or displayed) line contains 110 characters and will appear similar to the following:

+01.409F 100.00% 2.500+0 CFS 0001533+0 CF
00 00 90 DEGREE V-NOTCH WEIR
000 0 90 04 04 02 31 48

The last two characters (not displayed) are a 'CR' (carriage return) and a 'LF' (line feed). The large gaps between some of the words indicate extra character spaces which are not used in this particular text, but which are available for use if needed.

NOTE

1. You cannot use both serial outputs at the same time. You must select one or the other.

2. The serial output is paralleled with the Interrogator Port and the Internal Modem. Use of either the Interrogator Port or the Internal Modem will cause non-standard data to be transmitted.

4. 4 to 20 mA (Analog) Outputs (External and Internal)

These outputs provide connection between a Model 4230 Flow Meter and non-Isco process-control equipment, such as chlorinators, or any other type of equipment that you can control with a 4-20 milliampere current loop. Analog outputs convert digital information from the flow meter to a variable analog output current ranging from 4 to 20 milliamperes. When a condition measured by the flow meter is converted into an analog output, 4 mA becomes the 0% or baseline for the condition, while 20 mA becomes the 100% or full-scale of the condition. Isco offers two different arrangements for providing the 4 - 20 mA outputs. One is an external box that converts the signals from the flow meter to a 4 - 20 mA current loop. The other is an internal circuit board containing from one to four separate analog output circuits on the same board.

The 4 to 20 mA current is an industrial standard current loop for process control equipment that must respond to changing conditions by varying output rates.

Connecting the 4 - 20 mA Output Interface

The 4 - 20 mA Output Interface has its own case and AC power supply. Commercial power (120 VAC) ***must*** be available for this device. Battery operation (12 VDC) is not feasible due to voltage and current demands. It comes with a line cord, connectors, and two interconnect cables. One cable has 6-pin M/S connectors on both ends. This cable connects the input of the 4 - 20 mA Output Interface to the flow meter **Interrogator** connector. The other cable has a three-pin plug on it that connects to the output connector of the 4 - 20 mA Output Interface. This cable ends in three pigtailed wires you connect to the equipment you want to control with the 4 - 20 mA Output Interface.

Table 7: External 4-20 mA Specifications

Power:	120 VAC ⅛ Amp.
Output Connector:	3-pin male plug Pin A: + current out Pin B: – current out Pin C: not used
Output Accuracy: At 72° F (22°C): Full Oper. Range	 ±0.25% of full-scale ±0.5% of full scale
Operating Range:	0° to 140°F (–18° to 60°C)
Resolution:	0.1% of full-scale
Input Connector:	6-pin male M/S Pin B: – pulse input Pin F: + pulse input Pins A, C, D, E: NC
Isolation:	Output current optically isolated from flow meter.
Fusing:	¼ Amp. internal on AC line.
Adjustments/ Calibration	Factory-calibrated; when used within range, no adjustment needed,
Maximum Distance	1,500 ft. (457.3 m) using 18 AWG wire.

The Internal Analog Output Board

For those needing more than one analog output, Isco offers the **Multiple Analog Output Board**, which is installed inside the flow meter. This board provides from one to three isolated analog outputs. You can order the board with three, two, or one circuit installed. You must specify this when the flow meter is ordered. The board is compatible with the existing external 4-20 mA output box (60-1784-039). A flow meter can use either the internal board, the external box, or both, for a maximum number of *four* analog outputs.

NOTE

If your flow meter has both the multiple analog output board and the external analog converter, the internal ports will be designated Analog Outputs 1, 2, and 3 (depending on how many are present). The external converter will be designated either "External" or "Analog Output 0."

The Multiple Analog Output Board consumes a minimum of 16 mA per output; consequently, the flow meter should be AC-powered. If you must use battery power, you should consider the following to extend battery life:

1. Use a Solar Panel Battery Charger
2. Use a larger battery: either a commercial deep-cycle/marine type, or an Isco 35 Ampere-hour lead-acid battery.
3. Order and use only one analog output.
4. Flow meter program choices also affect power consumption. Use "minimum" settings, if possible. (See **Chapter 1, Table 5** and **Section 5.**)

The outputs from the analog output board are electrically isolated from the flow meter and from each other by internal DC-DC converters. The board uses the opening for the modem connector for its outputs. Normally, a flow meter will not need both the analog and modem boards. If your installation does, however, you should contact the factory.

The analog board terminates in a 6-pin male M/S connector on the flow meter case. Flow meters built with the analog board option are also supplied with an output cable. This cable connects to the wiring that runs to the equipment controlled by the 4-20 mA current loop and to the 6-pin M/S connector on the flow meter. The cable has a 6-pin female M/S connector and is provided with stripped pigtail ends for convenient wiring.

Table 8: Internal 4-20 mA Specifications

Temperature (operating):	0 to 140° F (–18 to 60° C)
Output Accuracy:	±0.5% of full-scale
Resolution:	0.1% of full-scale (0-20 mA)
Electrical Isolation:	Isolated from each other and from the flow meter.
Calibration:	Factory-calibrated; no further adjustments necessary.

Table 8: Internal 4-20 mA Specifications

Maximum output distance:	1500 feet (457.3 m) using 18 AWG wire.
Current Range (per loop):	0 to 20 mA
Maximum Load (per loop):	750 ohms
Analog Output 1 Terminations:	Pin A (Red wire –) Pin C (White wire +)
Analog Output 2 Terminations:	Pin D (Brown wire –) Pin F (Blue wire +)
Analog Output 3 Terminations:	Pin E (Black wire –) Pin B (Green wire +)
Note: If you must strip the cable further back to facilitate wiring, you will expose an orange, yellow, and purple wire. You may disregard these wires, as they are not connected in this application.	

5. Tipping Bucket Rain Gauge

A Tipping Bucket Rain Gauge is available from Isco for use with 4200 Series Flow Meters. The gauge connects to the flow meter by a cable terminated in an M/S connector. This connector plugs into the Remote Printer/Rain Gauge connector on the case. A Y-connect cable is available that allows use of both the rain gauge and a YSI 600 Multi-Parameter Sonde at the same time. You can connect extra cable (user-supplied) between the rain gauge and the factory-supplied cable as long as you do not exceed a maximum total length of 1,000 feet. Use 18 AWG wire or larger. Do *not* cut the M/S connector from the cable. The rain gauge is factory-calibrated to provide a contact closure to the flow meter for every hundredth of an inch (0.01") [or 0.1 mm] of rainfall. Software in the flow meter stores this information in memory and prints the accumulated data as a text line on the printer chart. It also allows the printout to be expressed in metric. You may, if you wish, provide a rain gauge of your own choice, but to ensure compatibility with the flow meter's operating environment, it must conform to the following specification:

- It must provide an isolated, dry contact closure.
- It must be a normally open contact configuration.
- It must close for 100 ms (–25 ms +150 ms) with less than 2 ms contact bounce.
- It must provide a contact closure for every 0.01" (or 0.1 mm) of rainfall

A cable assembly is available to connect a user-supplied rain gauge to the flow meter. Further information about the rain gauge is available from the factory or its manual.

Figure 16. Model 674 Tipping Bucket Rain Gauge

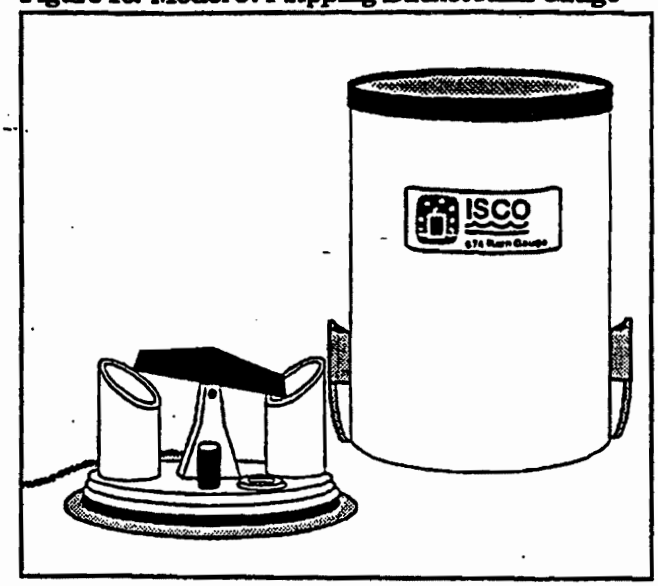

6. Isco FLOWLINK Software

Isco offers a proprietary software system for data acquisition, storage, retrieval, and analysis. This software system, FLOWLINK, contains programs that allow 4200 series flow meters to store blocks of level and other data readings in the flow meter's memory. You retrieve this stored data with either a laptop computer or central computer connected to the flow meter by modem. You can use other programs in the package to process the retrieved data for further analysis. In addition to storing data, this software makes it possible to divide part of the flow meter's memory into partitions. These partitions may be formatted in "rollover" or "slate" mode of data storage. You can also set up the flow meter to store data as a result of some sort of "triggering" event, such as level rising to a predetermined point, the passage of a predetermined time interval, or the occurrence of a storm event, such as rainfall.

Consult Factory - A detailed explanation of the FLOWLINK Software is beyond the scope of this manual. Information on FLOWLINK Software is available from its manual or from the factory.

7. High-Low Alarm Relay Box

Isco offers a control box that monitors flow rate data available from any 3200 or 4200 Series Flow Meter. Alarm relays trip when the flow rate exceeds or falls below pre-selected limits. High and low set points are user-set and range from 0% to 99% in 1% increments. Output from the unit is the switching of form C (SPDT) relay contacts. The unit has 2 relays; one for high alarm and the other for low. The availability of form C contacts (both NO [normally open] and NC [normally closed] con-

tacts) means you can switch loads either on or off. Relay contacts are rated 3 Amperes at 24 volts AC or DC. The alarm box operates on 12 VDC supplied from the flow meter. Current consumption in standby condition is approximately 10 mA. In alarm, current increases to 190 mA. You can connect as many as four alarm boxes to a flow meter, if the flow meter is powered from the AC line.

NOTE

1. Do not use the alarm box if your flow meter has a modem or uses FLOWLINK software (through either a modem or laptop computer).
2. Use the alarm box with caution in battery-powered installations, as it will significantly increase power consumption.

In standby condition, an alarm box consumes about one ampere-hour of battery capacity in four days (or reduces capacity approximately 25%). In alarm condition, one alarm box will completely discharge a fresh (4 Ah) battery in 21 hours. Isco recommends using only one alarm box in a battery-powered installation, and you can expect to change the battery more often.

Installation

The High-Low Alarm Relay Box is enclosed in a high-strength plastic box and is easily installed. Mount the unit with corrosion-resistant hardware through the 2 holes in the stainless steel mounting plate attached to the case. Two threaded holes in the case allow the use of either ½" conduit fittings or compression bushings. While the alarm box is suitable for use in damp locations, do not install it where there is any possibility of submersion. Where temperatures are expected to fall below freezing, Isco recommends installation of the alarm box indoors or in a heated location, as the manufacturer of the microprocessor does not specify its operation below 32°F (0°C).

WARNING

Hazard of electric shock! Use the relay contacts for low voltage (24 V) pilot duty only. Do not wire 120 VAC or higher voltages to the relay contacts.

Wiring to a 4200 Series Flow Meter

Connecting the High-Low Alarm Relay Box to a 4200 Series Flow Meter requires a cable and an M/S connector. A special cable, 25 feet long, is available from Isco. On one end of the cable is a 4-pin, male M/S connector. Plug this connector into the Remote Plotter/Rain Gauge connector on the flow meter. The other end of the cable has 3 stripped wires. Attach them to the alarm box according to the instructions in the alarm box instruction manual.

BLACK	+12 VDC
GREEN	–12 VDC
WHITE	DATA

8. Model 3200SH Short Haul Modem

This modem allows you to connect a 4200 series flow meter to a central computer through a hard-wired proprietary data communications system (non-telephone). If a lower baud rate (300) is satisfactory, the computer and the flow meter can be as much as five miles apart. This modem is installed inside the flow meter. If you have a proprietary data communications system, this modem makes it possible to communicate with a flow meter at greater distances than is possible with RS-232 lines. This system also makes involvement with the telephone company unnecessary. Typical applications would be large treatment plants or industrial complexes that already have interconnected proprietary data systems in place.

NOTE

The Model 3200SH Modem is *not* compatible with standard modems that use tones through the telephone system. Use the Model 3200SH only with proprietary data communications lines. This modem transmits pulses rather than tones, so it cannot operate through telephone company repeaters. Do not attempt to connect it to telephone equipment.

Single Flow Meter to Computer

The Model 3200SH requires you to install a companion modem, the **Computer Short Haul Modem**, at the computer. Maximum distance between the two modems is five miles (at 300 baud). Baud rates up to 4800 are possible, but due to increasing capacitance of the lines, the maximum operating distance decreases to one mile. This modem attaches to the RS-232 port of the computer and is provided with its own power supply. Maximum distance between the computer and this modem is 250 feet.

Short Haul Modem Operation

The Model 3200SH is designed for full duplex, asynchronous operation over two, DC-continuity, non-loaded, twisted pairs. This means that ***wire must be used***. This modem ***will not function*** over optical, RF, or microwave links. This modem converts digital data from the flow meter into pulses of different length. You must have a compatible modem at the other end of the communications loop to convert these pulses back to digital data.

Table 9: Short Haul Modem Specifications

Size:	3.8" × 5.6" (9.7 × 14.2 cm)
Power:	5 VDC and 12 VDC supplied from the flow meter.
Short Haul Input/Output:	4 wires (2 twisted pairs); one pair for transmission and the other pair for reception from a ***compatible*** remote modem.[1]
Wire Requirements:	18 – 24 AWG with maximum capacitance of 25 pf (picofarad) per foot.[2]
Interface:	Interfaces to digital circuitry (serial data) inside a flow meter or a data Switch.
Compatible Equipment:	All 4200 Series Flow Meters; the Computer Short Haul Modem.
Transmission Mode:	Asynchronous Full Duplex.
Operating Distance:	1 mile minimum to 5 miles maximum.[3]
Operating Baud Rate	300 to 4800 baud.
Operating Temperature	0° to 140°F. (–18° to 60°C.)
Storage Temperature	–40° to 140°F. (–40° to 60°C.)
External Connector	5-pin male M/S type.
Electrical Isolation	Transformers on both input and output loops; withstands 500 V surge or 300 V continuous; also breaks ground loops.
Transient Protection	Solid state (fast diodes) on transformer windings of both loops.

NOTES

1. The remote compatible modem may be another 3200SH Modem installed inside a Data Switch or a Computer Short Haul Modem.
2. Higher capacitance cable can be used, but it will reduce the maximum operating distance proportionally to the capacitance increase. For example, doubling the capacitance would halve the distance.
3. Operating distance depends on two factors: **(1)** the capacitance of the line used and **(2)** the baud rate selected. Distances of as much as five miles are possible with a baud rate of 300 and low-capacitance lines. Because of the effect of capacitance on higher rates, at 4800 baud and with a line capacitance of 25 pf per foot, only one mile can be guaranteed.

The Model 3200SH contains isolation and transient suppression to protect the modem and the associated flow meter from current loops and electrical transients.

When the Model 3200SH is inside a flow meter, connections are made through a five-pin male M/S connector on the side of the flow meter case.

Each Model 3200SH is provided with a five-pin M/S connector which must have the transmit and receive loop terminations soldered to it. Connect the loops as follows: RX+ and RX– are the receiving loop; TX+ and TX– are the transmitting loop.

Pin A: RX+ Pin B: RX–

Pin C: TX+ Pin D: TX–

RX+ and **RX–** are the receiving loop; **TX+** and **TX–** are the transmitting loop.

9. Parameter Sensing with Isco 4200 Series Flow Meters

The Isco Model 4210 Flow Meter has the capability of displaying, recording and (if FLOWLINK software is used) storing data provided from parameter sensors. The parameter sensors available for the Model 4210 Flow Meter are for ***temperature, dissolved oxygen (DO), pH***, (concerned with the acidity or alkalinity of a solution), and the **YSI 600 Multi-Parameter Sonde.** See **section 14** for information on the YSI 600 Sonde. This section covers the Isco pH, D.O., and temperature sensors.

Installation of Parameter Probes

The parameter probes, as well as other Isco probes such as the submerged probe and area-velocity probe, require complete, continuous submersion in the flow stream for proper operation. Dry operation can damage the pH and D. O. probes. The YSI Sonde (only) may be suspended vertically in the stream. Isco offers a series of rings that provide mounting for the probes in round pipes.

- Each probe snap-mounts to a specialized sensor carrier.
- The sensor carrier then attaches to the rings or mounting straps.
- The probe cable is carefully routed out of the stream.
- Only the temperature probe can connect directly to the flow meter's parameter probe connector.
- The pH and D. O. probes both connect to

parameter modules (amplifiers). The pH probe connects to the *Model 201 pH Module* and the D. O. probe connects to the *Model 270 D. O. Module.* The modules are *not interchangeable.*

NOTE

Isco flow meters are built with *one* parameter sensing port, and can only sense temperature plus one parameter at a time, (unless you use the YSI Sonde). You must select temperature, D. O. with temperature, or pH with temperature. If you want to change probes later, you can, but you will need to reprogram the flow meter. Note that selection of either pH or D.O. in step 1 (where *units of measure* are defined) will lock out any mention of the other in the menus for the rest of the program.

The Parameter Modules themselves plug into the Parameter Probe connector on the flow meter.

NOTE

The pH and D. O. probes require ***continuous submersion*** after installation, or they will lose sensitivity. Prolonged dehydration of the sensor bulb may damage or even *ruin* the pH probe.

10. The Temperature Probe

The temperature probe is the simplest of the three, consisting of a thermistor inside a metal housing. The thermistor changes resistance with an increase or decrease in temperature. The flow meter converts this resistance change to a temperature reading and displays it, in degrees Celsius or Fahrenheit, as chosen by menu selection.

Figure 17. Temperature Probe

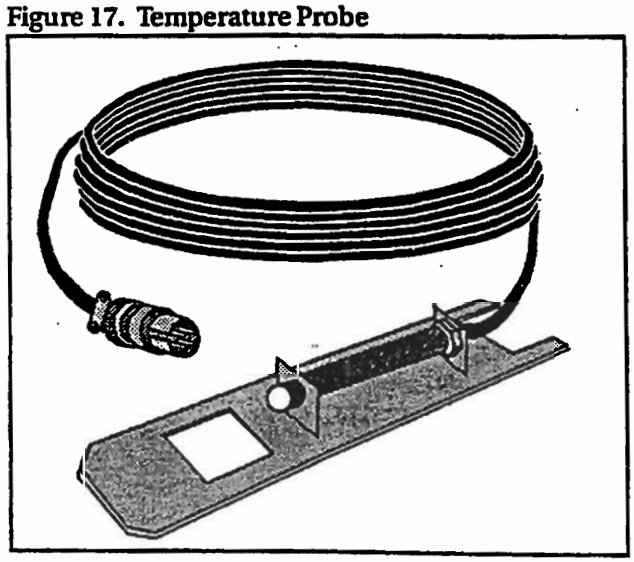

11. The pH Probe

The pH probe measures the acidity or alkalinity of an aqueous solution by determining the relative quantity of dissociated hydrogen ions, H^+ (actually H_3O^+) in the solution. A larger quantity of H^+ ions indicates acidity, while a smaller quantity of H^+ ions indicates alkalinity. The *H* in pH stands for Hydrogen and the *p* stands for power.

The normal scale for pH runs from 0 to 14, with 0 being most acidic and 14 being most alkaline. Distilled water at 25° C is neutral at 7, based on the fact that the dissociation constant (number of H^+ and OH^- [hydroxyl] ions present) for pure water at that temperature is 10^{-7}.

The ***dissociation constant*** is a number indicating the degree of ionic disassociation for a substance after it is dissolved in water. Dissociation constants vary widely for substances depending on the nature of the substance's chemical bonds. Ionic salts tend to have higher constants.

Each number on the pH scale between 7 and 0 equals a tenfold increase in H^+ ion. Each number between 7 and 14 equals a tenfold decrease of H^+ ion. pH measurements of wastewater are commonly made to monitor the effect of treatment chemicals added to raise or lower the pH.

Water that has been used for various industrial processes may deviate substantially from 7. Chemicals are often added to the water to bring the pH close to that of neutral water, which is 7.

For example, if the effluent has a concentration of heavy metal ions, they must be removed before discharge. Raising the pH of solutions containing transition-metal ions will cause them to precipitate, where they can easily be removed as sludge. The resultant solution will be high in pH and will require acid to neutralize it.

How the pH Probe Works

The pH probe is a combination of two electrochemical half-cells. Together they provide a low-voltage signal that corresponds to the hydrogen-ion concentration of a solution. If you look at the pH probe, you will see a glass bulb on one end. This is called the ***glass mono electrode.***

The glass is of special composition, sensitive only to hydrogen ion, and is exposed to the solution to be measured. The specific sensitivity to hydrogen ion prevents interference from other ions that may be present in the solution. It is essential to prevent grease fouling of this membrane. The glass membrane produces an electrical potential proportional to hydrogen ion activity.

The other electrode, called the ***reference electrode,*** completes the circuit between the glass electrode and the solution.

Figure 18. pH Probe (Remove rubber protective cap after installation.)

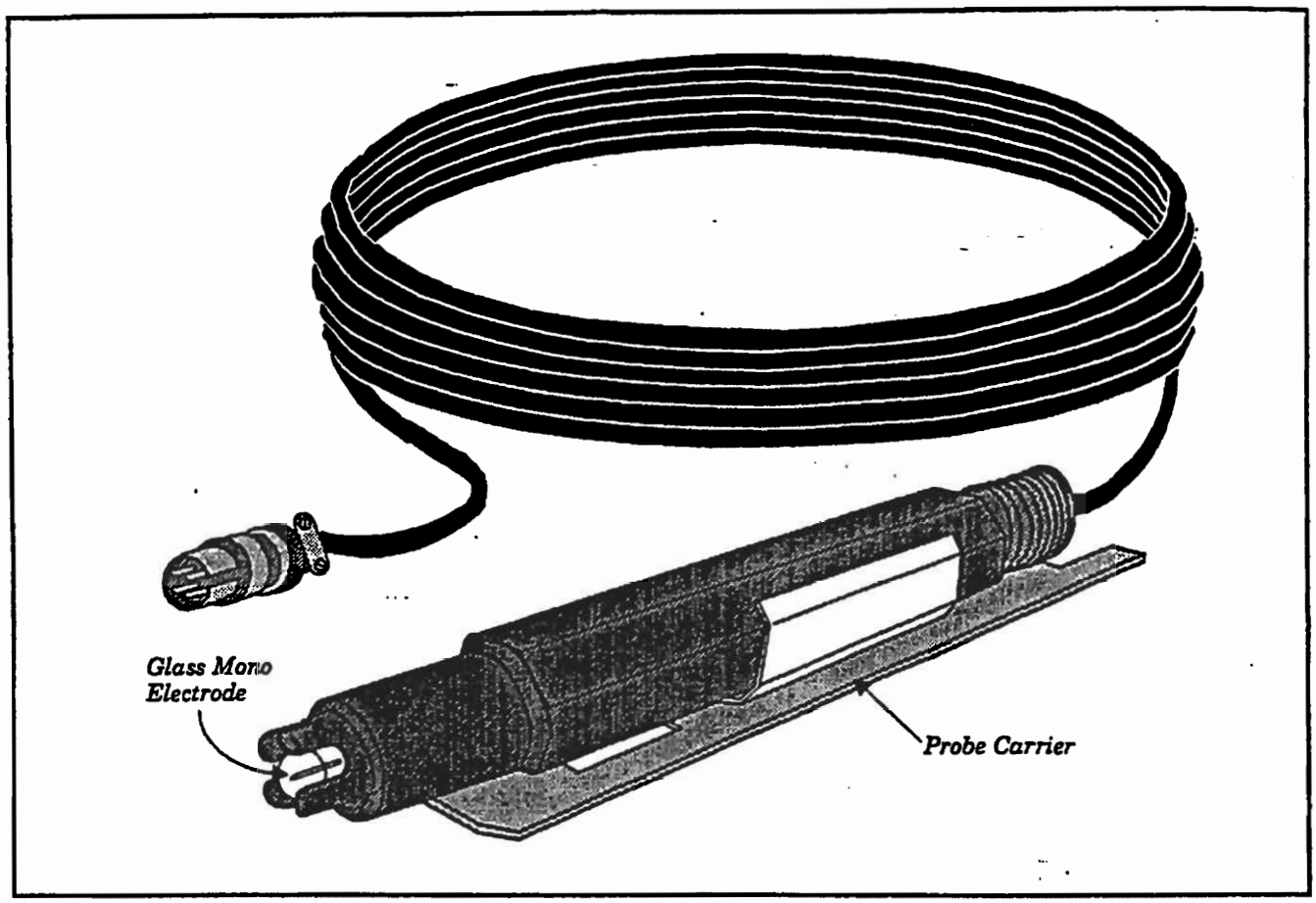

The two electrodes can be separate, or built into a single housing. The Isco pH probe combines both electrodes in a single housing and also contains an amplifier to reduce the extremely high impedance of the circuit. This improves the reaction of the probe to stray capacitance and reduces interference caused by electrical noise in the vicinity.

pH measurement is affected significantly by temperature, like any other chemical reaction. Consequently, temperature compensation is provided. in the flow meter. The Isco pH probe has a built-in temperature sensor that is exposed for faster response. For environments where rapid temperature changes make the standard probe too slow in response, Isco offers a pH probe with a separate temperature probe.

The pH probe connects to a Parameter Module that plugs into the Parameter Port on the flow meter. The probe has a 25 ft. (7.6 m) cable. For greater distances, contact the factory. The maximum distance between the module and the flow meter is 1,000 ft. (304.8 m).

When the ion-selective electrode and the reference electrode are connected to a high-impedance voltmeter and submerged in solution, ions move to the surface of the membrane. The electrical charge on the ions creates a potential difference across the barrier between the solution and the membrane. This potential, or voltage difference is proportional to the activity of the ion in solution.

The potential, when read by a sensitive voltmeter, translates into a reading of pH. With an Isco flow meter, the voltage is sent first to a preamplifier inside the probe to reduce the impedance of the circuit and improve the signal-to-noise ratio, and then on to the parameter module to allow greater operating distance from the flow meter. The flow meter determines the pH value and displays it.

pH Probe Calibration

The Model 4210 provides a two- or three-point calibration for the pH probes with commercially-prepared calibrated buffer solutions. Calibrations of 4 and 7, 7 and 10 and 4, 7, and 10 are all possible. For accurate readings you must clean and re-calibrate the probe on a regular basis. How often you need to do this depends on the condition of your flow stream.

Flow streams with a high grease content will coat the sensing surfaces of the probe quickly, clogging them and slowing the response time or stopping it altogether. Installation in very greasy flow streams is ***not*** recommended.

To calibrate the pH probe with the flow meter, first go to program Step 1: PROGRAM, SETUP. Select PROGRAM. Step through the units of measure with the Enter key until you reach the menu that says pH UNITS - NOT MEASURED, pH. Select pH. You must do this in step 1 or the pH menu will not appear later. Now go to step 3. PORT TO ADJUST - NONE, LEVEL, pH. (Other selections may appear.) Select pH. If the pH menu does not appear in step 3, go back to step 1 to make sure you have turned it on. Then the pH selection of calibrations will appear. If you select 4 & 7, the following will appear. Calibration with the other menu options (7 & 10 or 4, 7, & 10) is essentially the same as shown below. For the other menus, see **Chapter 2**.

RINSE PROBE AND PLACE IN 7.0 pH SOLUTION PRESS ENTER WHEN STABLE: *X.XX* pH

When the probe has stabilized, press **Enter** and the following display will appear:

RINSE PROBE AND PLACE IN 4.0 pH SOLUTION PRESS ENTER WHEN STABLE: *X.XX* pH

When you have entered this second value, the pH probe calibration is complete. You can then install the probe in the flow stream.

pH Probe Installation Guidelines

Installation of the pH probe is similar to the submerged level sensor, other parameter probes, and the area-velocity sensor.

- Install the probe ***only*** in streams that have continuous flow. The sensing end of the probe must always remain wet.
- For proper operation, there must also be enough flow to submerge the sensing end of the probe completely.

If flow in the stream is intermittent (dry for periods of time), the pH sensing bulb will dry out and its response time will slow. This is a problem in situations where pH changes rapidly. If the probe is dry long enough, it will first lose sensitivity, then be slow to respond, and finally be ***ruined***. Never let the sensing end of the probe dry out completely.

- Installation in streams with high grease content will result in poor performance and require frequent cleaning and recalibration.

Greasy substances, being nonconductors of electricity, weaken the electrical potentials formed between the glass mono-electrode and the solution, slowing or halting the response altogether.

- The pH Sensor operates satisfactorily mounted either horizontally or vertically in the stream. However—
- Horizontal mounting is more secure, and presents less of an barrier to trap debris.
- Simple suspension of the probe is ***not recommended***, particularly in streams of high velocity, or those that carry debris.

If you mount the pH probe vertically, mount it securely. Do not just hang it from the top of the pipe by its cable. Suspending the probe in the stream is not stable.

For horizontal mounting, the probe fastens to a sensor carrier that snap-fits to an Isco mounting ring. The mounting rings fit various diameters of round pipes 15" diameter and smaller. For larger pipes, use the ***Isco Scissors Ring***. For installation details, refer to the instruction sheet supplied with the mounting ring. The mounting rings are held in place by the outward force of spring pressure in the smaller sizes and by a scissors arrangement in the larger sizes. After mounting the probe in the ring or strap, route the cable out of the stream so it will not trap debris or clog the sewer.

Mount the ***pH Module*** within 25 feet of the probe, but in a location higher than the highest anticipated level for the flow stream. The amplifier box is sealed and will withstand temporary submersion, but this should be avoided.

IMPORTANT NOTE

When installing the pH probe and its sensor carrier, make sure the mounting slots on the carrier are ***completely pressed*** into the mating tabs on the ring. The probe relies on a full engagement between tabs and slots for secure mounting. If the slots are loose against the tabs, the probe may be swept away by the force of the stream.

- Always mount the probe in an easily-accessible location, because you will need to service it (cleaning) from time to time.

Also you will eventually need to replace it. You can mount the probe facing either upstream or downstream, but Isco recommends facing upstream, as there is a stop on the sensor carrier that is not effective when the probe is facing downstream.

- Remember to unscrew the rubber guard cap from the sensing end of the probe when you install it, or the probe will be unable to sense the flow stream.

The guard cap is to protect the probe during shipment and storage and to keep the glass membrane and liquid junction from drying out. If you remove the probe for any reason, clean it and replace the cap after filling with 4.0 buffer solution. Never store the probe dry or without the cap in place.

The Isco amplifier box extends the allowable distance between the probe and the flow meter. The probe has a 25-foot cable, so you must mount the amplifier within this distance. The maximum distance between the amplifier box and the flow meter is 1,000 feet.

Table 7: pH Probe Specifications

Description: Submersible, horizontal-mounting probe with combination-type electrodes. Porous Teflon® liquid junction to resist fouling and coating. Steam-sterilized glass hemibulb for long- term stability. (See note 1).	
Size:	6" long × ¾ NPT.
Body Material:	Polyphenylene Sulfide.
pH Range:	0 to 14 pH units.
Temperature:	32° to 176° F (0° to 80° C).
pH Accuracy:	±0.1 pH units over the full range.
pH Electrode Junctions: Type I: Single porous junction for normal applications. Type II: Double porous junction for special applications.	
Temperature Compensation: Done by software inside the flow meter. The standard pH Probe contains an integral temperature sensor. Isco also offers a pH probe ***without*** the integral temperature sensor to be used with a separate Isco Temperature Probe. In environments with rapidly changing temperatures, this can provide a faster response. The cable for the temperature sensor and the pH sensor cable both go to the pH Parameter Module.	

Notes on the pH Probes

1. ***All pH probes are consumable items, meaning that they will eventually fail and have to be replaced.***

   During the life of the probe you will have to ***clean*** and ***recalibrate*** it periodically. Grease and debris will interfere with the probe's ability to measure pH accurately. Grease, particularly, will coat the end of the probe. Because grease is an insulator, it will keep the ions from reaching the glass membrane and porous liquid junction, thus failing to create a voltage potential.

   You can consider the pH probe at its end-of-life when you can no longer calibrate it (after cleaning) to ±0.2 pH with the standard buffers of 4, 7, and/or 10. Another indication of end-of-life is when the probe calibrates satisfactorily, but takes too long to stabilize (more than 10 minutes).

Figure 19. pH Parameter Module

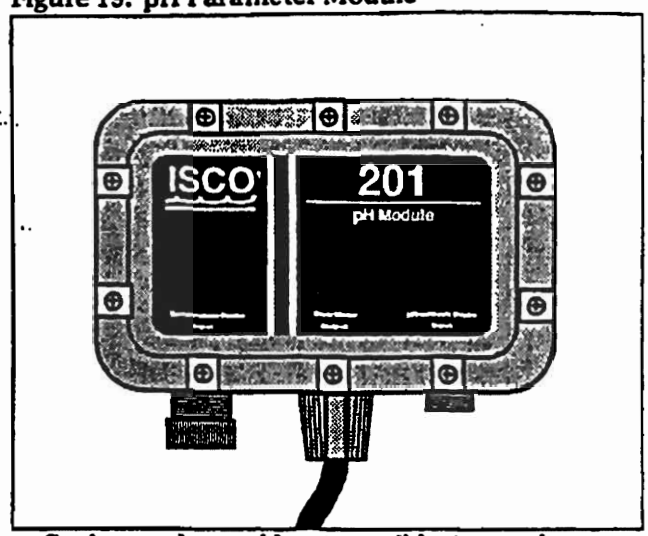

   Such a probe could not possibly respond to rapidly-changing pH. If your situation requires fast response, you might consider end-of-life to be when stabilization time reaches five minutes.

2. ***The single-junction probe is intended for use in streams that are free of sulfide and heavy-metal ion concentrations.***

   Metal and sulfide ions poison the probe over time and will eventually ruin it. Domestic sewage typically contains high concentrations of sulfide. Effluent from mining operations, or certain metal fabrication plants may contain significant heavy metal ions. Use this probe where the concentrations of metal and sulfide ions are ***lower than 100 parts per billion.***

3. ***The double-junction probe is intended for applications where there are sulfide and/or metal ion concentrations.***

   This probe is recommended where poisoning ion (sulfide and metal) concentrations are ***greater than 100 parts per billion.***

Storage and Maintenance of pH Probes

If you remove the pH probe from operation, be careful to keep the glass sensor bulb wet. Always store the probe with the rubber cover screwed completely over the threaded end of the sensor. Exposure to air causes the glass membrane on the sensor bulb to dry out. This makes it very slow to respond in solution. Prolonged or repeated dehydration of the bulb may **ruin** the probe.

The pH sensitive glass can also become "conditioned" to its environment, especially when it is continuously exposed to high pH (10 and above) solutions. The glass does have a memory and will respond slowly when exposed to a lower pH solution after having been in a high pH solution for any significant period of time.

Storage of a pH probe in a 4.0 buffer solution is recommended as this has a "regenerative" effect on the glass and does not put a memory on it. Tap water will work if 4.0 buffer solution is not available. Deionized water is good for quick rinses to clean the element, but ***not*** for prolonged storage of an electrode. Continuous exposure of the ion-sensitive membrane to a wetted, but non-ionic solution will improperly "condition" the membrane.

The reference electrode is also adversely affected when allowed to "dry out." Salt crystals from the electrolyte or precipitates of the solution measured will form salt "bridges" either within or on the surfaces of the liquid junction, causing the reference to be less conductive and resulting in a higher reference impedance. This condition will typically worsen until the unit no longer functions. Soaking the reference electrode in a 4.0 pH solution, or tap water if the buffer is not readily available, may bring the reference back to life. Boiling the electrode in 4.0 buffer solution or tap water could revive the electrode in more severe situations. If none of these works, it may be necessary to replace the probe.

12. The Dissolved Oxygen (D. O.) Probe

This probe measures the amount of oxygen dissolved in a stream or waterway. Oxygen dissolved in water is necessary for many forms of life that dwell in lakes and streams. Inadequate supplies of dissolved oxygen will cause fish and other aquatic life that depend on them as a food source to die off or be sharply diminished in numbers. The measurement of dissolved oxygen content is of interest to those monitoring the condition of lakes and streams. Fish must have a certain minimum concentration of dissolved oxygen to thrive, typically 4 to 6 mg/l.

Figure 20. The D. O. Probe

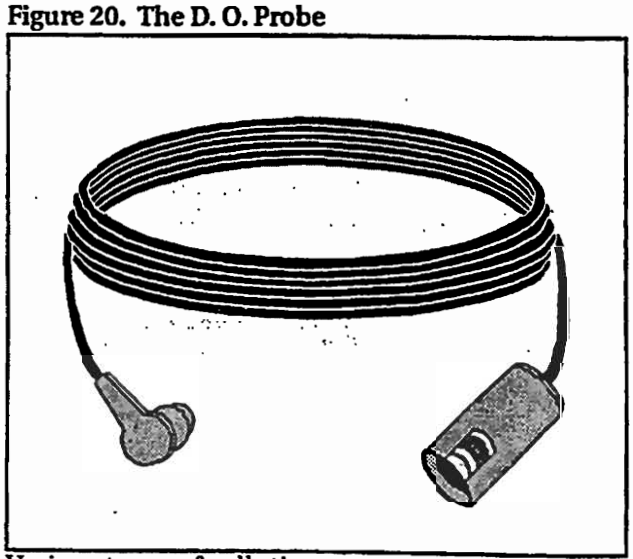

Various types of pollution can cause the amount of oxygen dissolved in water to drop sharply, placing the aquatic life forms at serious risk. The D. O. Probe measures the amount of oxygen dissolved in water in a range from 0 to 20 mg/l. Note that the flow meter can display D. O. in either mg/l (milligrams per liter) or ppm (parts per million) depending on your choice in programming.

NOTE

For effective use of the D. O. Probe, please read and consider the following before making the installation:

1. ***The D. O. Probe requires constantly moving water.***

   The probe consumes oxygen during operation; this will deplete the oxygen available from stagnant or stratified waters, resulting in an inaccurate reading. Do ***not*** install it in a stilling well or in any location where water movement is intermittent or very low. As a guideline, a minimum velocity of **one foot per second** is suggested.

2. ***Frequent maintenance is necessary when the probe is installed in flows with grease or solids content.***

   Tests conducted by Isco with probes installed in various waste streams indicate that grease and solids **quickly** coat the probe's membrane, making it impossible for oxygen to enter the reaction chamber. This will result in an abnormally low reading, or no reading at all.

   Cleaning the membrane is generally not effective, as it tends to drive the solids further into the membrane pores. You must usually replace both the electrolyte and the membrane to get an accurate reading. In severe cases of fouling it may be necessary to change the membrane very frequently, even as often as every other day.

How the D. O. Probe Works

A thin permeable membrane stretched over the sensor isolates the electrodes from the environment, but allows gases to enter.

When a polarizing voltage is applied across the sensor, oxygen that has passed through the membrane reacts at the cathode, causing a current to flow. The membrane passes oxygen at a rate proportional to the pressure difference across it. Since oxygen is rapidly consumed at the cathode, it can be assumed that the oxygen pressure inside the membrane is zero. Hence, the force causing the oxygen to diffuse through the membrane is proportional to the absolute pressure of oxygen outside the membrane. As the oxygen partial pressure varies, both the oxygen diffusion through the membrane and the probe current change proportionally.

Probe Preparation

First, unscrew the sensor guard; remove the O-ring and membrane, then thoroughly rinse the sensor with distilled water. Prepare the KCl electrolyte according to the directions on the bottle. **Use distilled water only.** You install the membranes by hand. The probe is shipped with a small folder containing several replacement membranes. To install a new membrane, follow these steps:

1. Secure the probe body so it is in an upright position. You can use a vise, adjustable wrench, or locking pliers, etc., whatever is satisfactory. Do not apply too much force to the probe body, or you will crack it.
2. Fill the cavity around the silver anode with electrolyte. The liquid should be **free of bubbles** and should **completely cover** the tip of the sensor. Fill the cavity to the point where any more electrolyte would spill over.
3. Lightly lay the membrane across the top of the probe. If you do this carefully, there will be no bubbles under the membrane.

NOTE

Handle the membrane material with care, touching it at the ends only.

4. Place the O-ring on top of the membrane, generally conforming to the circumference edge of the probe.
5. Place the thumb and index finger from both hands opposite each other on the O-ring at equal distances.
6. Roll the O-ring down over the end of the probe, being careful not to touch the membrane where it covers the probe.
7. Trim off excess membrane with scissors or a sharp knife. Check to see that the stainless steel temperature sensor (the metal rod protruding below the liquid cup) is not covered by extra membrane.

NOTE

There must be no bubbles under the membrane and no creases in it for the probe to function correctly.

8. Shake any excess KCl solution from the probe. Reinstall the sensor guard. Keep the sensor in a humid environment when not in use and between measurements. The plastic bottle that was placed over the end of the sensor when it was shipped is ideal for this purpose. Place a piece of moist tissue inside the bottle, and slide the bottle over the probe.

Membrane Thicknesses

Isco supplies a **2 mil** (.002") thick membrane for use with the D.O. probe. This membrane is recommended for **long-term monitoring situations only**, typical of our users' applications. Use ***only*** this thickness membrane with D. O. probes connected to Isco flow meters. Do not use other thickness of membranes as the ***Parameter Module*** used with the probe is calibrated only for the 2-mil membrane, and cannot be recalibrated in the field. Do ***not*** use other membrane thicknesses or inaccuracy will result. Besides, the thinner membranes are ***very*** fragile and difficult to install.

Probe Installation

The D.O. probe attaches to a sensor carrier bracket that snaps into an Isco mounting ring. Use the specific size Spring Ring for pipes less than 15" in diameter, and the Scissors Ring for pipe sizes greater than 15" diameter. Refer to the instruction sheet supplied with the mounting ring.

IMPORTANT NOTE

When installing the D.O. probe and its sensor carrier bracket, make sure the mounting slots on the sensor carrier are ***completely pressed*** into the mating tabs on the ring. The probe relies on a full engagement between tabs and slots for secure mounting. If the slots are loose against the tabs, the probe may be swept away by the force of the stream.

Probe Operation and Precautions

The following factors determine the life of the D. O. probe and the frequency of service.

1. Membrane life depends on use. Membranes will last longer if installed properly and treated with care during use. Contents of the flow stream are also important, as some substances will foul the membrane **very** quickly. Erratic readings will result from loose, wrinkled or fouled membranes, or from **large bubbles** in the electrolyte reservoir. If erratic readings or evidence of membrane damage occur, you should replace the membrane and the KCl electrolyte.
2. In environments where the membrane becomes rapidly coated with oxygen-consuming or oxygen-evolving organisms, erroneous readings may occur. Chlorine, sulfur dioxide, nitric oxide, and nitrous oxide can affect readings by reacting like oxygen at the probe. If your readings seem unreasonable, you may need to perform analysis to determine whether these gases are the cause. Long-term use, as for monitoring, can magnify the effect of these factors in some applications.

3. Avoid any environment containing substances that may attack any of the probe's materials. Some of these substances are concentrated acids, caustics, and strong solvents. The probe materials that come into contact with the sample include FEP Teflon, acrylic plastic, ABS plastic, EPR rubber, stainless steel, epoxy, polyetherimide, and the polyurethane cable covering.

4. For correct probe operation, the gold cathode must always be bright. If it is tarnished (which can result from contact with certain gases) or plated with silver (which can result from extended use with a loose or wrinkled membrane), you need to restore its surface. You can return it to Isco or clean it yourself with a probe reconditioning kit. (This kit is available from Isco.) Never use chemicals or any abrasive not supplied with this kit. It is also possible for the silver anode to become contaminated, which will prevent successful calibration. Try soaking the probe overnight in a 3% ammonia solution; then rinse with deionized water, recharge with electrolyte, and install a new membrane. If you are still unable to recalibrate the probe after several hours, return the probe to Isco for service.

5. If the sensor O-ring is worn or loose, you should replace it. The probe comes with a kit of O-rings and replacement membranes. Additional replacement O-rings are available from Isco in an O-ring replacement pack.

6. If the probe is not going to be in constant use, you should store it in the plastic bottle provided in shipping. To keep the electrolyte from drying out, place a small piece of moist towel or sponge in the bottle and insert the probe into the open end. If you need service for your D.O. probe, Isco recommends returning the unit for evaluation. In addition to servicing the probe, we can also provide advice on product applications, and you can also purchase other accessories for use with the D.O. probe. Use only **2-mil** membranes with D. O. probes connected to Isco flow meters.

Note that you must use the Isco Model 270 D. O. Module box between the probe and flow meter; this extends the distance between the probe and the flow meter to 1,000 feet.)

Calibrating the D. O. Probe with a Flow Meter - Prepare the probe as described above if this has not already been done (fill the probe cavity with electrolyte and seat the membrane).

Table 8: D.O. Probe Specifications

Cathode:	Gold
Anode:	Silver
Membrane:	FEP Teflon; 2 mil standard
Electrolyte:	Half-saturated KCl (Potassium Chloride)
Temp. Range:	0 to +45° C
Polarizing Voltage:	0.8 Volts (Nominal)
Probe Current in Air at 30° C:	19 microamps (nominal)
Probe Current in Nitrogen at 30° C:	0.15 microamps or less
Connection:	12 ft. (3.2 m) cable with 5-pin male M/S connector
Response time: Typical response for dissolved oxygen, using supplied membranes, is 90% in 20 seconds. Response at low dissolved oxygen levels is typically 90% in 60 seconds.	

Figure 21. D.O. Parameter Module

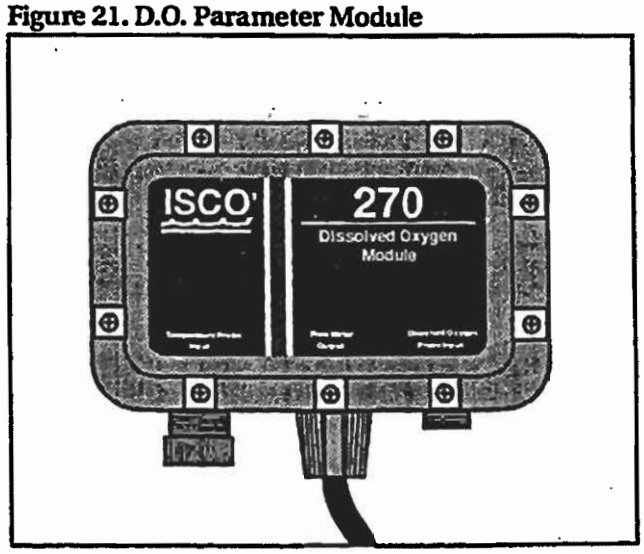

NOTE

You must use the Isco Temperature Probe with the D. O. Probe to provide temperature compensation.

Wrap the ***both*** the D. O. Probe and Temperature Probe in a damp cloth. Wait ten minutes for it to stabilize, then proceed.

Go to *step 1* in the flow meter. Select PROGRAM, then step through the units of measure with Enter until you reach the menu for pH measurement. Select NOT MEASURED. Press Enter. Then D. O. UNITS will appear. Select either MG/L or PPM. Press **Enter**. Exit the program and re-enter going to **step 3**.

Note that you must select measurement of D. O. in

step 1 or the D. O. menu will not appear in step 3. If you cannot get the D. O. menu to appear in step 3, recheck your selections in step 1. Remember that you must select NOT MEASURED for pH in step 1 or D. O. **will not appear** on the menu for the rest of the program.

SELECT PORT TO ADJUST NONE LEVEL D. O.

Select D. O. Press Enter. The following display will appear:

D.O. CALIBRATION D.O STANDARD, ABS BAROMETRIC PRESSURE,

Altitude is just off the screen. You can select D.O. STANDARD if this calibration medium is available to you. Do not select ABS (absolute) BAROMETRIC PRESSURE unless you are at sea level or know how to correct for this value. The barometric pressure provided from the Weather Bureau is corrected for attitude. Select ALTITUDE.

ALTITUDE UNITS OF MEASURE FT, M

Then:

ENTER ALTITUDE ALTITUDE = *XXXXX* FEET *(or meters)*

Enter the altitude for your location. This is critical to the probe's accuracy. The following display will then appear:

WRAP D. O. PROBE IN MOIST CLOTH PRESS ENTER WHEN STABLE: *X.XXX* MG/L

The reading is in milligrams of oxygen per liter. If you chose PPM in program step 1 for D. O. units, the reading would be in parts per million.

13. Installation of Parameter Probes in Round Pipes

Spring Rings (15" and Under)

For circular pipes ranging in diameter from 6 in.(15.2 cm) up to 15 in.(38.1 cm), spring stainless steel mounting rings are available for mounting the probe in the flow stream. First you mount the probe on the appropriate carrier. Then you snap the carrier into the mounting tabs on the ring, making sure that the tabs are fully engaged in the slots. The mounting ring is designed to be compressed, slipped inside the pipe, and then allowed to spring out to contact the inside diameter of the pipe. The inherent outward spring force of the ring firmly secures it in place.

A typical self-expanding mounting ring (with a submerged probe mounted on it) is shown. These mounting rings are available for use in pipes with inside diameters of 6 in.(15.2 cm), 8 in.(20.3 cm), 10 in.(25.4 cm), 12 in.(30.5 cm), and 15in.(38.1 cm).

Figure 22. Spring Ring (15" and Under)

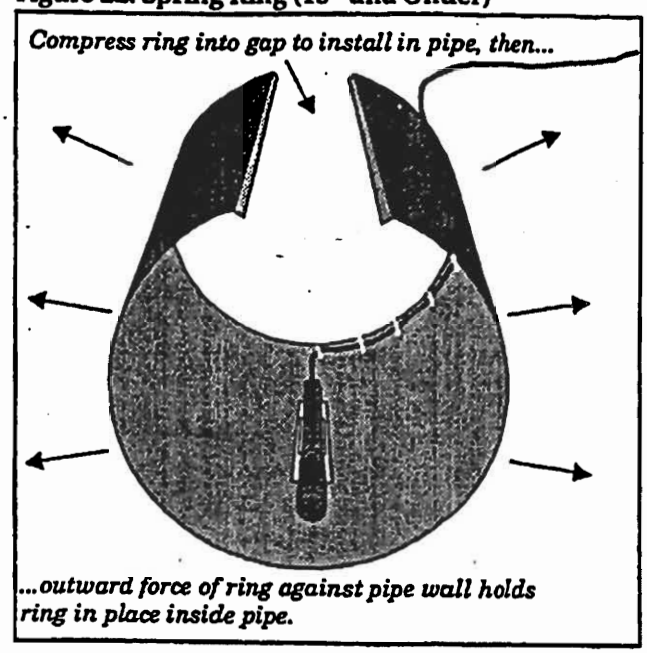

Pipes Larger Than 15"

For pipes 18 inches in diameter and larger, Isco offers the adjustable **Universal Mounting Ring**. This device consists of two or more metal strips that lock together with tabs to form a single assembly.

There is a base section where the probes are mounted, two or more extension sections (usually), and a scissors section at the top that expands the entire assembly and tightens it inside the pipe. The scissors section contains a long screw, that as it is tightened, increases the length of the section.

U-Channel Mounting

It is possible to mount a submerged probe in a U-channel, but you would not be able to use the complete Universal Mounting Ring. You would use the base section only and attach it to the U-channel surface with studs fired from a power-activated stud gun. Consult the factory for more information, if you must mount a probe in a U-channel.

Attaching the Probe

First attach the probe to the probe carrier. The adapter, with the probe attached then snaps into place on the mounting ring or into the base section of the Universal Mounting Ring. This method of attaching the probe to an adapter and snapping the adapter to the ring allows for easy removal of the probe in case service is needed later. To complete the probe-mounting ring assembly procedure, attach the probe cable to the ring. Do this by using the self-locking plastic ties supplied with the ring.

Route the probe cable away from the probe and

along the edge of the ring with holes and secure it in position by placing the ties through the holes in the mounting ring and then locking them around the cable, as shown. To prevent debris from catching on the probe cable, it is important to attach the cable to the mounting ring so that it offers as little resistance to the flow as possible. Do this by installing plastic ties through all the mounting holes provided. Then make sure there are no loops or slack sections in the cable. Attach the probe cable neatly and closely to the mounting ring. Note that you can route the probe cable either to the left or right of the mounting ring.

CAUTION

Do *not* overtighten the plastic ties; they should be tightened just enough to secure the cable in place, without greatly indenting the cable. Overtightening the plastic ties may cut the cable.

Figure 23. Scissors Ring

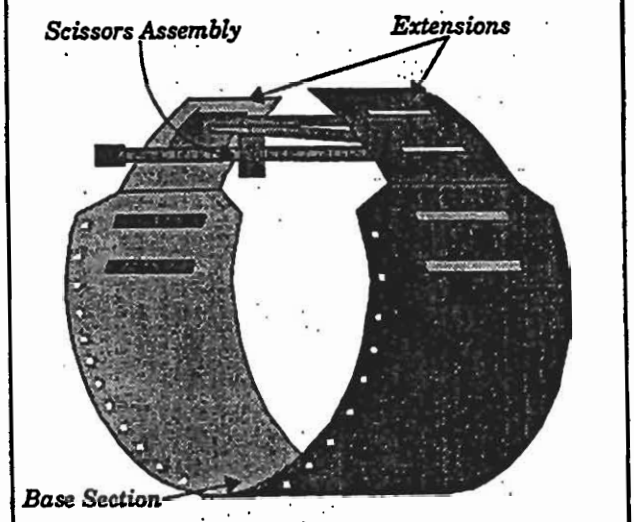

Tightening scissors assembly expands ring to press firmly against wall of pipe, securing ring.

Installation of the Spring Ring

After the probe has been attached to the mounting ring, the actual installation procedure is fairly simple. First, lower the mounting ring - probe assembly into the area of the pipe. Place the cable on a secure surface. Next, grasp the mounting ring and compress it into a tight circle. Then shove the ring (with the pointed end of the probe oriented upstream) up into the pipe the desired distance.

When the ring and probe are positioned as desired, simply release the ring, allowing it to expand outwardly. It may be necessary to rotate the ring to position the probe in the bottom center of the pipe. This completes the probe installation procedures using the mounting ring.

CAUTION

The mounting ring may need anchoring. Under conditions of high velocity (greater than five feet per second or 1.5 meters per second), the mounting ring may not have sufficient outward spring force to maintain a tight engagement with the pipe. The ring may tend to lift off the bottom of the pipe in an oscillatory fashion, or may even be carried downstream

This problem is more prevalent in the larger diameter pipes (10, 12, and 15 inch) and in pipes with a smooth inside surface (for example, plastic). If any of these conditions are present, or if movement of the mounting ring is detected or suspected, you must anchor the ring in place. You can do this by shooting studs through the ring into the pipe or by other appropriate means. In some cases, it may be sufficient to simply increase the outward spring force of the ring by bending it into a less round configuration.

Final Installation of the Scissors Rings

You can assemble the sections of the Scissors Ring together and lower the assembly into the manhole where installation is to take place. Or, you can assemble the parts at the bottom of the manhole, whatever is most convenient to you. Do not try to assemble the larger ring assemblies in pipes during conditions of high flows. Always try to make installation during times of lowest flow, both for reasons of greater ease of installation and for reasons of safety. The drawing on the next page shows all the component parts of the Scissors Ring and what is needed to fit pipes sized from 18 to 72 inches in diameter. It is reprinted here for your convenience. For installations where it is desirable to mount the parameter probe upstream from an outfall, a four-foot probe extension is available from Isco.

Figure 24. Four-Foot Probe Extension

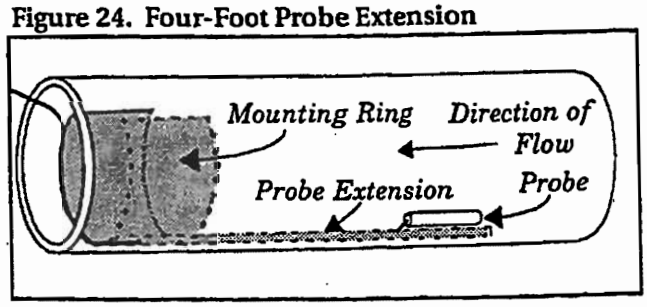

Figure 25. Scissors Ring Components

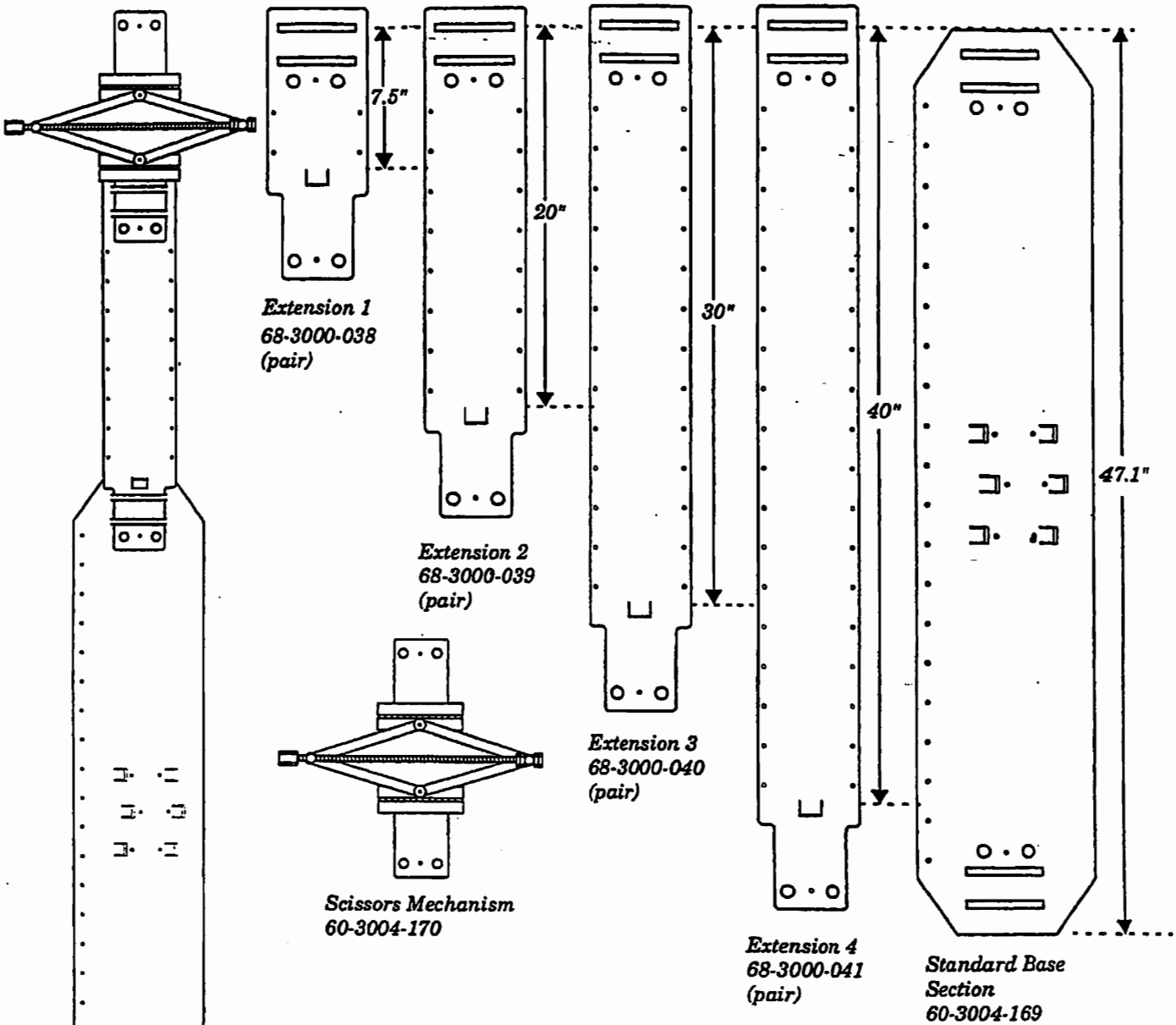

Assembled Scissors Ring
(Flat view)

The Following Table Indicates Recommended Part Configuration For Various Pipe Diameters.

DIAMETER (EXACT)	PART(S)
18"	Base Alone
21", 24"	Base + (2) 7.5" Extensions
30"	Base + (2) 20" Extensions
36"	Base + (2) 20" Extensions + (2) 7.5" Extensions
42"	Base + (2) 30" Extensions + (2) 7.5" Extensions
48"	Base + (2) 40" Extensions + (2) 7.5" Extensions
60"	Base + (2) 30" Extensions + (2) 7.5" Extensions
72"	Base + (4) 40" Extensions + (2) 7.5" Extensions
72"	Base + (4) 40" Extensions + (2) 7.5" Extensions

14. The YSI 600 Multiple Sensor Sonde

The YSI 600 Sonde is a multi-purpose, water quality measurement and data collection system. It is intended for use in research, assessment, and regulatory compliance. The YSI 600 Sonde can measure the following water qualities:

- Dissolved Oxygen
- pH
- Total Dissolved Solids
- Conductivity
- Salinity
- Temperature

The YSI 600 is ideal for profiling and monitoring water conditions in industrial and wastewater effluents, lakes, rivers, wetlands, estuaries, coastal waters. and monitoring wells. It can be left unattended for weeks at a time with measurement parameters sampled at your selected interval and data transmitted to the flow meter. You can use the Model 600 as deep as 200 feet below the surface, or in as little as a few inches of water. The fast sensor response of the YSI 600 makes it ideal for vertical profiling. Its small size means it can fit inside two-inch diameter monitoring wells.

Figure 26. The YSI 600 Multiple Sensor Sonde

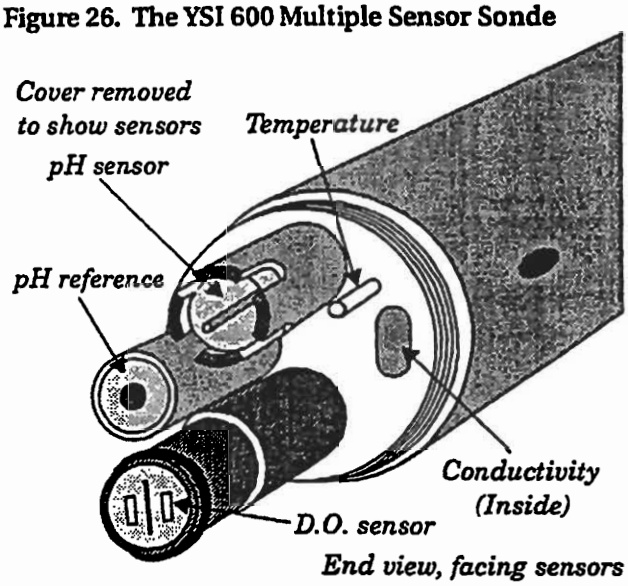

A "Rapid Pulse Dissolved Oxygen Sensor" eliminates the need for stirring, providing accurate results without an expensive and bulky stirrer. Because no stirring is required, no supplemental power supply or battery need be provided for the stirrer, and sensor drift caused by passive fouling is minimized.

The YSI 600 communicates with an any 4200 Series flow meter equipped with suitable hardware and software. Earlier model 4200 flow meters can be factory-modified to work with the YSI Sonde. Data can be exported through FLOW-LINK for further processing.

The YSI 600 is available with a cable 25 feet long connect to the flow meter. The cables are waterproof at the sonde and can be used in lab or field.

Information about programming the flow meter to use the YSI 600 is found in **Chapter 2** of this manual. Information about the YSI 600 Sonde is found in the YSI manual.

Table 9: YSI Model 600 Specifications (Complete Unit)

Operating Environment	
Medium:	Fresh, Sea, or Polluted Water
Temperature:	–5° to +45° C
Storage Temp:	–40° to +60°C
Depth:	0 to 200 Feet (0 to 61 meters)
Dimensions:	
Diameter:	1.6 Inches (4.06 cm)
Length:	14 Inches (35.6 cm)
Weight:	4.9 Pounds (2.22 kg)
Miscellaneous	
Materials:	PVC, Stainless Steel
Computer Interface	RS-232C, SDI-12
Power:	12VDC, Externally supplied
System Requirements	
Connects to *modified* 9-pin Rain Gauge Terminal on any 4200 Series Flow Meter. Operation of Rain Gauge with YSI 600 is still possible with a special Y-connect cable. Modification of older 4200 Series Flow Meters is possible with changes in connectors and boards. Consult Factory.	

Sensor Specifications: Temperature

Sensor Type:	Thermistor
Range:	–5° to +45° C
Accuracy:	± 0.4° C
Resolution:	0.1° C

Dissolved Oxygen % Saturation

Sensor Type:	Rapid Pulse - Polarographic
Range:	0 to 200 % Air Saturation
Accuracy:	± 2% Air Saturation
Resolution:	0.1% Air Saturation

Dissolved Oxygen, mg./L

Sensor Type:	Calculated from % air saturation, temperature, and salinity
Range	0 to 20 mg./L
Accuracy:	± 0.2 mg./L
Resolution:	0.01 mg./L

Conductivity*

Sensor Type:	Four-Electrode Cell
Range:	0 to 100 mS/cm
Accuracy:	± (1% of reading + 0.001 mS/cm)
Resolution	0.01 mS/cm or 1 µS/cm

*Specific conductance (conductivity corrected to 25° C), resistivity, and total dissolved solids measurements are also provided. These values are automatically calculated from conductivity according to algorithms found in ***Standard Methods for the Examination of Water and Wastewater*** (ed. 1989).

Salinity

Sensor Type:	Calculated from conductivity and temperature
Range:	0 to 70 ppt
Accuracy:	± 0.2 ppt
Resolution	0.1 ppt

pH

Sensor Type:	Glass Combination Electrode
Range:	2 to 14 pH Units
Accuracy:	± 0.2 Units
Resolution	0.01 Units

15. Mechanical Totalizer

A mechanical totalizer is available for the Model 4250 that consists of a seven-digit, non-resettable mechanical counter mounted in the front panel. It must be ordered with the flow meter. The totalizer advances according to program selections for units of measure and the maximum flow of the primary device used. The totalizer is internally set to advance at 1/100 of the rate of the display totalizer. Consequently, you must multiply the number shown on the mechanical totalizer by 100 to determine the actual value for total flow.

CHAPTER 5

1. Routine Maintenance

This chapter of the Model 4210 instruction manual provides detailed instructions on the care and routine maintenance necessary to keep the flow meter in top operating condition. Included are sections on cleaning the flow meter, reactivating the desiccator, maintaining the ultrasonic level sensor, and servicing the internal printer.

Isco strongly recommends that you become familiar with the maintenance procedures presented here. While the Model 4210 is ruggedly built to withstand severe field conditions, it will function best and remain most reliable if these simple procedures are learned and followed.

Care of the Flow Meter Case

If the lid is tightly latched, and all the M/S connectors on the side of the case are tightly capped, you can clean the case by spraying it with a hose or washing it with soapy water. Do not use a hose with a nozzle or a high pressure hose-and-wand such as is found at car washes. Do not immerse the flow meter in a tank of water to wash it. While designed to withstand accidental submersion in water, if that should occur, the flow meter is not intended for routine submersion.

Care of the Case Seal

Periodically inspect the case seal and clean it, if necessary. The ridge extending around the edge of the back half of the flow meter cabinet forms a seal with the groove in the cabinet door. It should be free of dirt, sand, etc. If it isn't, the case may not seal completely when closed. Clean it carefully with a damp cloth. The rubber gasket in the lid should also be clean; if not, clean it with a small brush and a damp cloth.

If you do any cleaning while the case is open, be careful not to allow any dirt or debris to fall inside the flow meter case; it is best to work on the flow meter with the case standing upright. If the seals are not properly maintained, they may leak, causing damage and eventual failure of the components inside.

Preventing Moisture Damage

To prevent moisture damage to internal components, keep the lid tightly latched at all times, except when you need to access the front panel to change the program or the paper roll. Do not run the flow meter with the case open as a matter of routine. If you do, you will expose the internal components to dirt and moisture; you will also cause the case desiccant canister to prematurely saturate. Inspect the desiccant canister periodically and recharge it as necessary.

It is also important to keep the external connectors clean by keeping the mating connectors or the protective caps tightly screwed down. Under severe operating conditions, you can spray the threads of the connectors with a cleaner/lubricant (such as Jif manufactured by GC Electronics or WD-40 manufactured by the WD-40 Company) to prevent corrosion. Be careful not to spray any of the conductive terminals (pins or jacks) inside the connectors; residue from the sprays could cause intermittent or failed contacts.

Reactivation of the Internal Case Desiccant

As shown in the picture, the Model 4210 is equipped with a reusable desiccating canister attached by a spring steel clamp attached to the inside of the flow meter's lid. This canister contains silica gel that attracts moisture trapped inside the flow meter's case when it is closed. This keeps the inside of the case completely dry during shipment, storage and use. If you leave the case open, the desiccant will attract moisture from the surrounding air. Eventually, its absorption capacity will be reached, and it will no longer be able to protect the internal components of the flow meter.

Checking and Regenerating the Desiccant

Inspect the desiccant canister each time the case is opened. The desiccant canister has a window on its side that looks blue or black when the desiccant is in dry. As the desiccant adsorbs moisture, the pebbles in the window will turn pink or pale amber. When the pebbles turn pink, the desiccant needs to be regenerated, or replaced with the spare canister provided in the flow meter's accessory package.

Remove the canister from the flow meter by pulling out on the spring clamp that holds it in place. Lift the canister from the mounting bracket and heat it in a vented oven at 300°F (150°C) for about three hours, or until the blue color returns. Do not use a microwave oven. After cooling, put the canister back in the flow meter; make sure the window on the side of the canister remains visible.

Figure 28. Location of the Internal Desiccant Canister

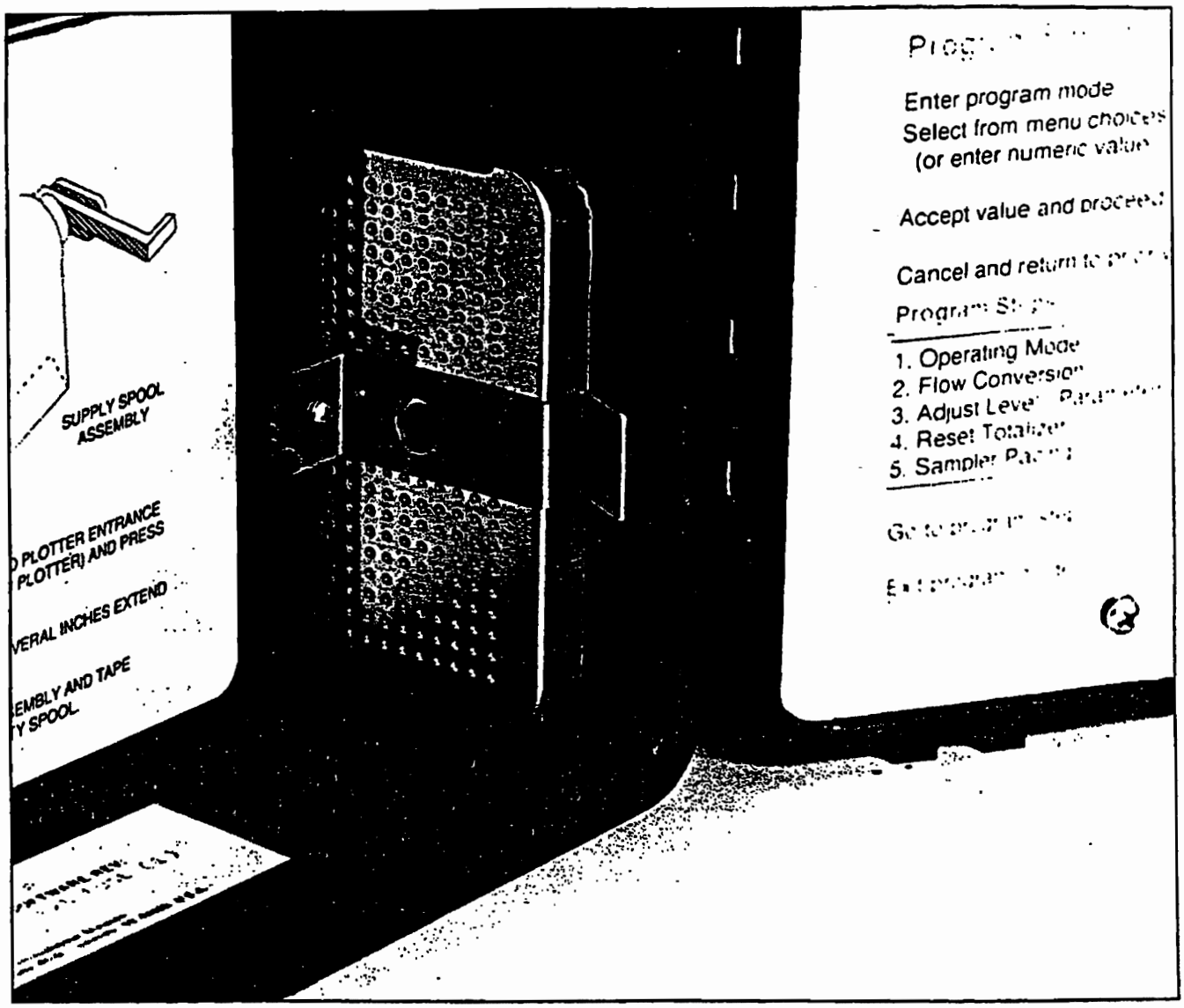

NOTE

Do not allow the flow meter to operate with a saturated desiccant canister. In many flow environments, gases are present in the atmosphere that can combine with available water vapor to form acids. The acids formed this way can corrode the internal components of the flow meter, ruining them. An active desiccant canister inhibits the formation of these acids by absorbing water vapor. Keep the lid closed whenever possible. Inspect and regenerate the canister when necessary.

Care of the Ultrasonic Level Sensor and Cables

The ultrasonic level sensor requires little maintenance. It is encapsulated for protection from the environment. The level sensor's transducer is encapsulated behind the rubber potting material. Do not drop the assembly, nor attempt to take it apart. The ultrasonic level sensor contains no user-serviceable parts. If the transducer's surface becomes contaminated due to long-term use or accidental submersion, operation of the unit may be impaired. If this happens, clean the unit. Clean the case with a brush. Clean the surface of the transducer with a gently flowing stream of water.

Cable Inspection

Inspect the cables connecting the ultrasonic level sensor to the flow meter periodically for deterioration caused by abuse or exposure to the elements. Damaged cables threaten the operation of the ultrasonic level sensor; replace them. Keep connectors clean and dry. In permanent installations, always install cables so they are not at risk of damage resulting from other activity taking place in the area.

Figure 29. Changing the Roll of Paper

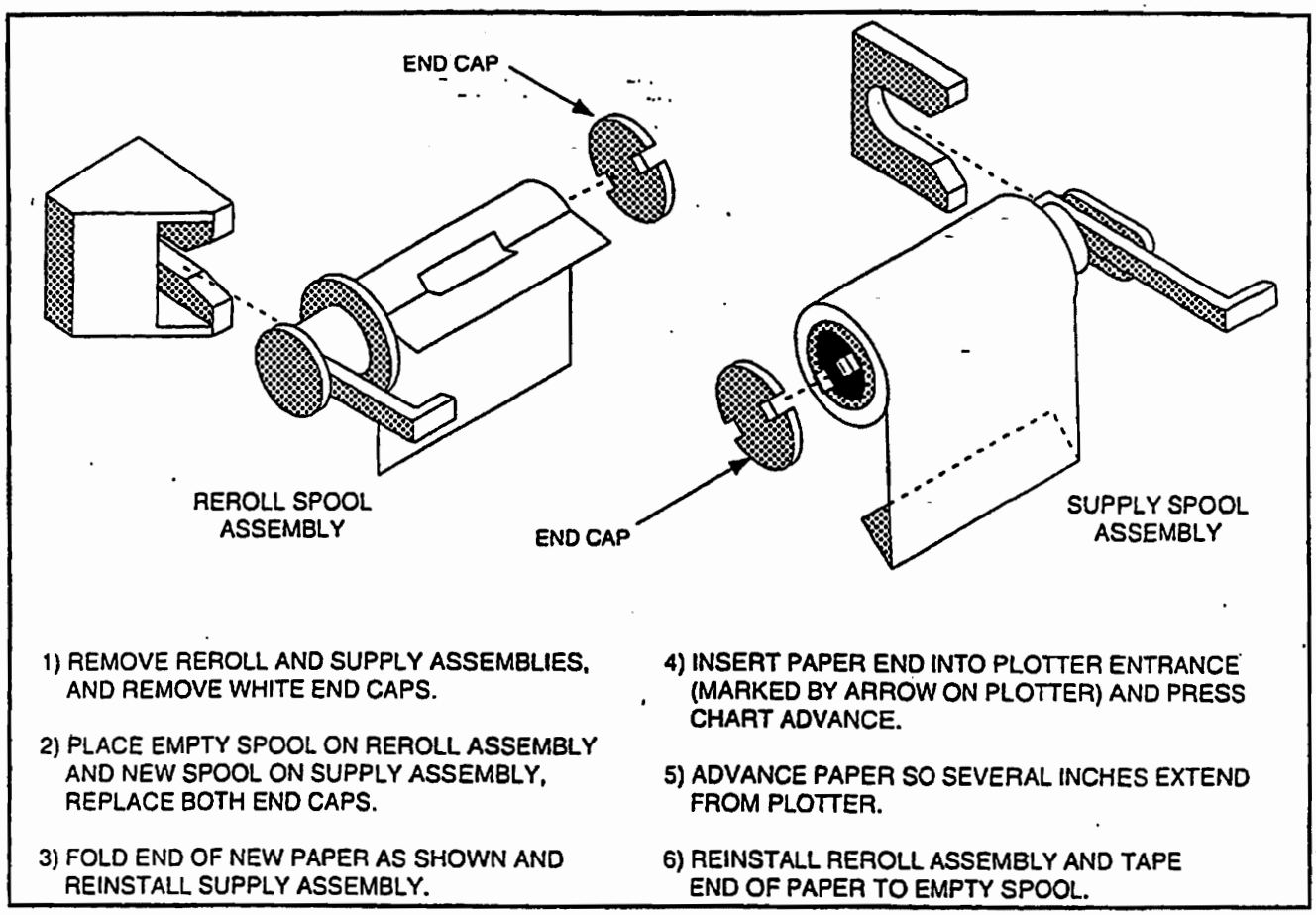

Cables repeatedly subjected to physical abuse will fail and should be installed in conduit for protection. In temporary installations, avoid running cables where they may trip someone or be run over by heavy equipment.

2. Maintenance of the Printer

The internal printer needs little maintenance beyond changing the chart roll and the ink ribbon. Refer to the pictures provided for each section. Also refer to the label inside the cabinet.

Changing the Roll of Paper

To change the chart paper you will need:

- a new roll of paper
- a knife or a pair of scissors
- a small piece of tape

The printer will shut down when the paper runs out. The roll is nearly empty when a 1-inch wide pink band appears on the left side of the chart.

To change the roll:

- Locate the handle on the left side of the take-up roll.
- Pull straight out on this handle until the take-up roll slips off the printer.
- Remove the paper roll from the take-up spool by holding the handle in one hand with your thumb pressed against one of the slots in the white end cap.
- Snap the white end cap free from the two black catches on the end of the spool.
- Pull the paper roll off the spool with your other hand.
- Remove the feed spool by pulling on the handle extending from the right side of the printer.
- Snap off the other white end cap as described previously. Save the white end caps; you will reuse them.
- Remove the empty roll from the spool by holding the handle in one hand and pulling the roll from the spool with the other.

Installing the New Roll of Paper

After you remove the empty roll:

- Slide the new roll onto the feed spool so it unrolls from the back side - facing away from you.

Figure 30. Changing the Ink Ribbon

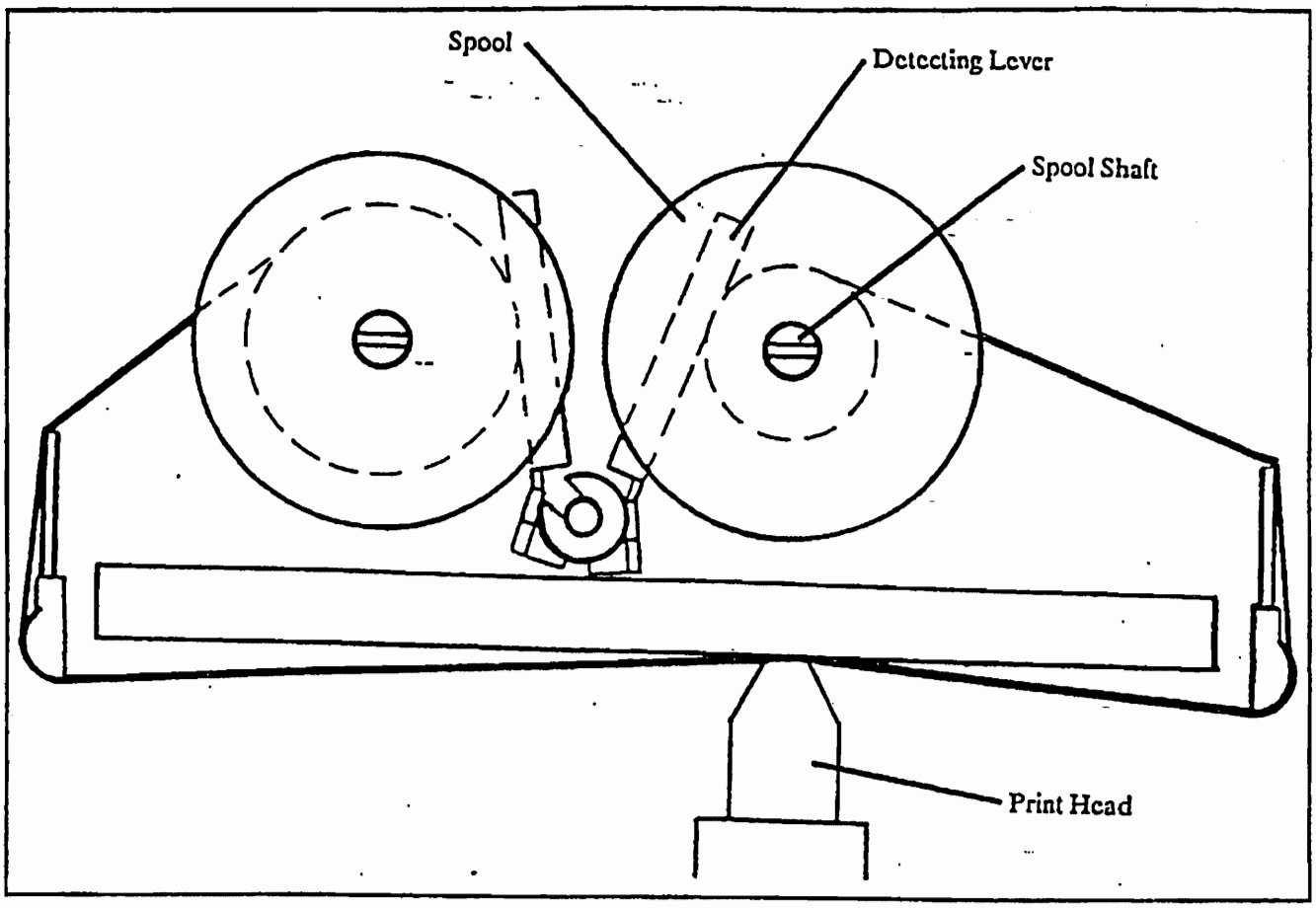

- Line up the slots in the cardboard tube with the raised guides on the spool.
- Reattach the white end cap by wedging the two catches on the end of the spool into the two slots on the white end cap.
- Peel the paper back gently so it will unroll freely. Using the knife or scissors, cut off the end of the roll if it is torn.
- Fold the paper over on itself so the end is straight and stiffer than a single layer of paper would be.
- Unroll a few inches of the paper and set the roll on top of the cabinet.
- Use your fingers to feed the paper down the back of the internal printer to where it touches the roller. Make sure the paper gets past the lever for the paper sensing switch.
- Then press the **Chart Advance** key and hold it until the paper comes through the printer mechanism.

Rethreading the paper

- When the paper comes through, reinstall the feed spool with the new roll on it by snapping it into the printer assembly.
- Run a few inches through the printer, using the **Chart Advance** key; then unfold the end.
- Put the cardboard tube from the empty roll on the take-up spindle and reattach the white end cap by wedging the catches on the end of the spool into the two slots on the white end cap.
- Use the piece of tape to attach the end of the new paper to the cardboard tube from the old roll.
- Roll some of the paper onto the spool so that it will wind clockwise, facing away from you. Then reinstall the take-up roll into the top of the printer.
- Be careful to push it all the way back in, so that the take-up gear on the end of the spool assembly will reengage.
- When the take-up spool is back in place, again push the **Paper Reroll** key; this will remove any slackness in the paper.

Ink Ribbon Replacement

Ribbon life will vary greatly from one installation to another depending on how often the printer has

to print. When the characters on the chart become difficult to read, you should replace the ribbon. If possible, try to replace the ribbon at the same time you change the paper roll, as it is easier to replace the ribbon when the roll of paper is out of the way. To replace the ribbon:

- Turn the unit off.

If there is paper in the unit, remove the take-up spool and unroll enough paper to get it out of the way, so you can clearly see the two ribbon spools. Each spool has a ribbon-detecting lever pressing against the ribbon. Note the direction the ribbon leaves the left spool and how it winds onto the right spool.

- Take hold of one of the spools and rotate it slightly, loosening the ribbon.
- Lift gently until the spool comes free from its shaft. Do the same with the other spool.
- Lift the chart and take-up spool out of the way and remove the ink ribbon from the printer mechanism, noting how it threads through the unit.
- Thread the new ink ribbon through the printer mechanism.
- Locate the three small pins on each spool of the ink ribbon and turn the spools so the pins face the gears on the two ribbon shafts.
- Replace the two spools on their respective shafts, pushing the detector levers out of the way so the spools will easily re-engage their gears.
- Gently rotate each spool to tighten the ink ribbon. Reinstall the paper take-up roll if necessary.

Lubrication and Disassembly Not Recommended

It is not necessary to provide any periodic lubrication to the internal printer mechanism in the Model 4210 Flow Meter. The internal printer mechanism has been designed for long life and trouble-free service without special maintenance, if it is not subjected to abuse. Isco recommends no attempt be made to oil or disassemble the mechanism should it malfunction. Oil attracts dirt; some oils become gummy over a period of time and may cause parts of the mechanism to bind or stick. Attempts to disassemble the internal printer mechanism may cause the frame or component parts to be bent or distorted. This will certainly cause malfunction. Do not force any part of the mechanism with tools or probes. Other than the roll of paper and the ink ribbon, the internal printer mechanism contains no user-serviceable parts. Isco recommends the unit be returned to the factory for service should this become necessary.

3. Servicing and Troubleshooting

This section of the Model 4210 instruction manual provides servicing information and a troubleshooting guide to assist you in correcting certain minor malfunctions that might occur. Included are sections describing disassembly of the unit, on fuse replacement, and on the care and repair of CMOS circuitry.

Access to Mechanical and Electrical Components

You can remove the flow meter mechanical assembly from the cabinet for inspection and servicing, if necessary. First, remove the four screws, two at the top, and two at the bottom, that hold the flow meter chassis in the cabinet. Then you can lift chassis out by carefully inserting the thumb or index finger from each hand into the upper right and lower left corners of the chassis opening surrounding the printer. Do not try to lift the flow meter out of the case by holding on to any part of the printer. If you do, you could bend or distort part of the printer, possibly damaging it. Once the chassis has cleared the case, you can grip it by with both hands by its edges and lift it free of the case.

Fuse Replacement

With the flow meter chassis out of the cabinet, you can locate and change fuses. The fuses are located on the printed circuit board under a cover on the back of the flow meter keyboard assembly. Slide the cover off and you can see the fuses. The fuses are labeled F1, F2, and F3. The proper size for each of these fuses is:

F1 - 5 amp., fast blow

F2 - 5 amp., fast blow

F3 - 2 amp., fast blow

Always replace a blown fuse with one of the same value. Using a larger value fuse may cause serious damage to the flow meter or to its power supply.

Display Warnings

The LCD will show various warnings and error messages to warn of problems in the program, or difficulties inside the flow meter. Some messages request routine maintenance; others point out programming errors; still others indicate serious internal difficulties. Following are typical warning messages displayed by the LCD:

CHECK PRINTER FUSE

Figure 30. Lifting the Flow Meter from the Cabinet

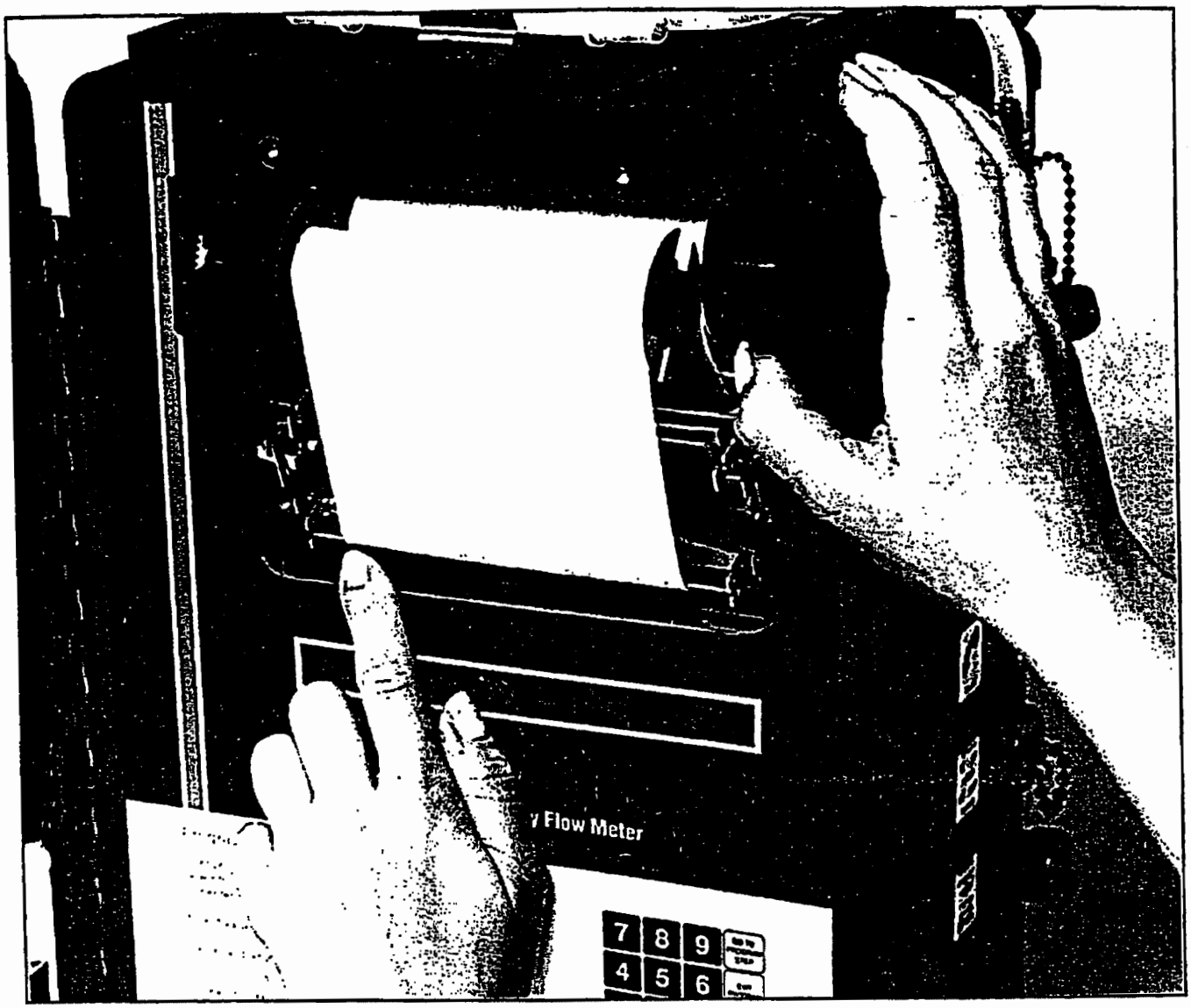

PRINTER JAMMED

PAPER OUT

4. System Reset

If the flow meter does not appear to be operating normally, you can try to restart the processor by turning the unit off, waiting a few minutes, and then turning the unit back on. If that doesn't work, you can (software) reset the system by pressing both the 4 and **Exit Program** keys at the same time while the unit is powering up. Pressing 4 and **Exit Program** only works when the unit is powering up; it has no effect when the unit is running. Pressing 4 and **Exit Program** when powering up will cause most programmed entries to be lost. Accumulated data stored in the Model 4210 will also be lost.

The flow meter will revert to the program originally entered at the factory. If this operation is performed, it will be necessary to reprogram the unit to user specifications.

NOTE

Pressing **4** and **Exit Program** may leave some values programmed into the flow meter's computer. If you want to remove all programmed entries, press 1 and Clear Entry when the flow meter is powering up.

The following messages describe serious internal problems, indicating service is required:

ROM CHECKSUM ERROR - or -

FOUND BAD RAM - CALL CUSTOMER SERVICE

If these messages appear, the Isco Technical Repair Department should be called for instructions at (800) 775-2965 or (402) 474-2233.

CAUTION

Do not attempt to disassemble or repair the Model 4210 Flow Meter (other than changing fuses) unless you are skilled in the evaluation and repair of microprocessor-based circuitry. Isco recommends no attempt be made to disassemble or repair the printer mechanism or display module.

Hints on Troubleshooting

The electronic circuitry of the Model 4210 is solid-state and its reliability is high. If the unit should fail to operate properly, the problem is most likely a mechanical failure. Items such as a broken or intermittent connection in the power cable or wiring harness should be suspected.

If Serious Problems Occur

If you suspect an electronic problem, Isco strongly recommends that you call the **Isco Technical Repair Department - (800) 775-2965** or **(402) 474-2233** outside the U.S.A., Canada, and Mexico. The service department will advise you on how to return the Model 4210 to the factory for servicing. Due to the complex nature of microprocessor-based circuitry, specialized knowledge and instrumentation are required for troubleshooting. The Isco service department has trained technicians and specially-designed equipment necessary for timely, efficient repair of the Model 4210 Flow Meter. If you still wish to attempt repairs, the Isco Customer Service Department is available to provide additional advice and information on servicing.

Processor Servicing Complicated

Servicing circuitry controlled by a microprocessor is difficult when you don't know the program that controls it, especially so if you have no way of being certain that the microprocessor and memory are good. Therefore, when attempting to isolate problems within the unit, the CPU and memory should be assumed to be working properly until attempts to find problems in the peripheral circuitry have been exhausted. This is for two reasons: first, the likelihood of failure is far greater on transistor drive circuits (heavier currents are handled here), than on the CPU or memory. Second, it is doubtful whether the repair facility would have the time or equipment to do worthwhile troubleshooting (beyond exchanging components) on the CPU or memory.

5. Preliminary Troubleshooting Steps

When the unit does not work, do not automatically assume the CPU is at fault. Following are suggested areas to check before attempting to service the CPU and associated circuitry.

Figure 31. Location of the Three Fuses

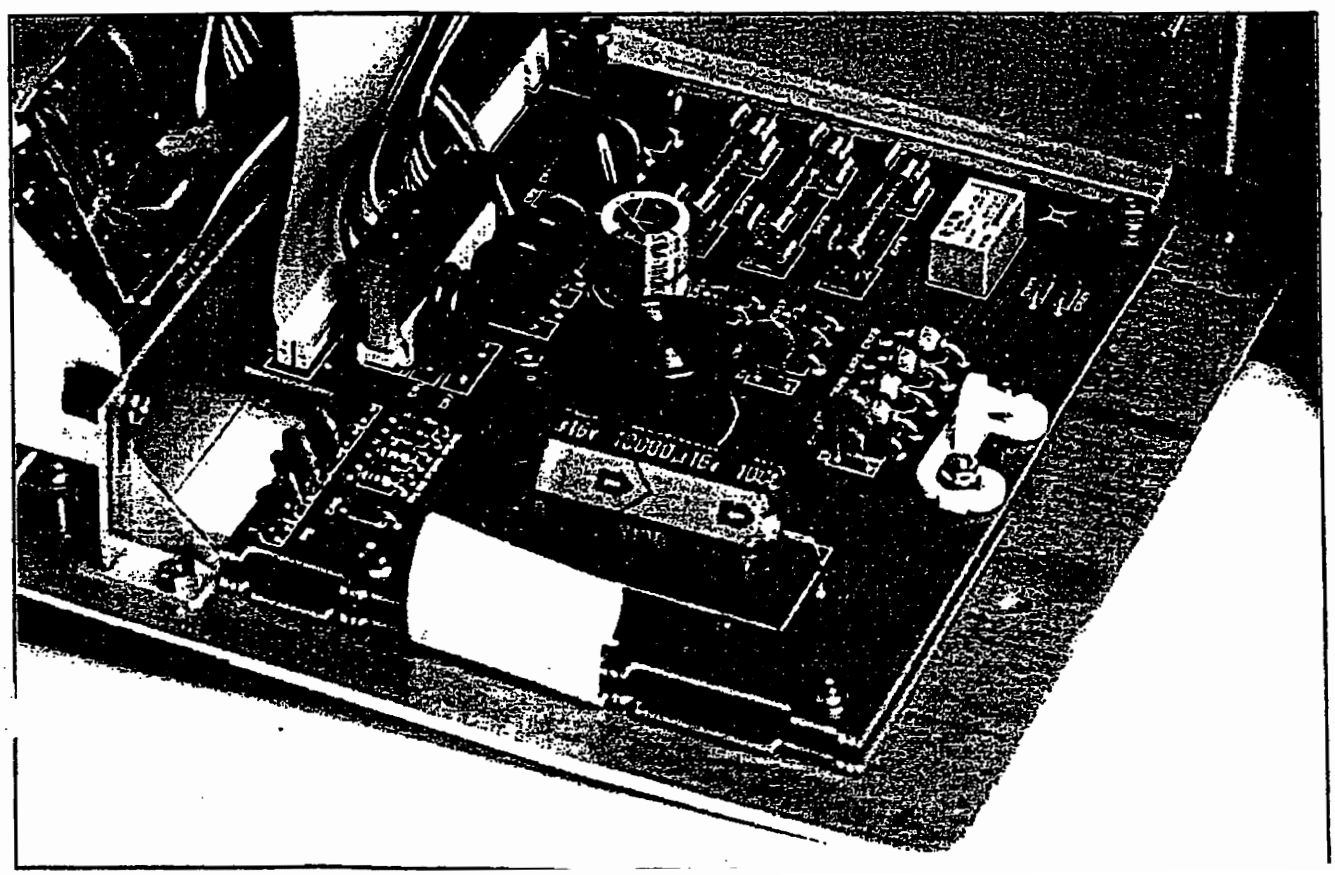

elephone consultation with Customer Service is trongly recommended. Look for the following:

1. ***Check the ultrasonic transducer and its cable.***

The flow meter could be all right and will appear not to work because of a damaged cable or misaligned transducer; check these first.

2. ***Check to see if any fuses are blown***

3. ***Check the battery or power supply.***

Proper voltage to the unit should be from 10.5 to 14.5 VDC. If the unit is powered from the AC supply, make sure the branch circuit is delivering at least 110 VAC to the power supply cord.

4. ***Check the wiring harnesses, connectors, and solder joints.***

Under normal conditions these should stay in good condition. However, abuse, or operation of the unit with the door open or the desiccator saturated could cause corrosion of the connectors in certain atmospheres.

5. ***Look for physical damage.***

Burned or broken components, overly hot components, stuck or inoperative switches, or the evidence of water damage.

6. ***Look for shorted or open diodes and transistors, especially driver transistors.***

7. ***Check the voltage regulators***

The output voltage from the regulators should be within 5% of their rated value. Check to see that rated voltages are available at various places on the boards.

8. ***Look for excessive current draw from some or all the circuitry.***

This will usually be accompanied by an unusual amount of heat coming from some component or group of components, and the voltage on the power rails may well be depressed.

9. ***Check the input signals to unit and see that they are correct.***

This will require the use of an oscilloscope. Consult Customer Service for the appearance of wave forms.

10. ***Check to see that the crystal oscillator is operating and at the proper frequency.***

11. ***Check the reset circuitry to see that it is working properly.***

6. Precautions for Servicing CMOS Circuitry

Most of the circuitry in the Model 4210 Flow Meter is made up of CMOS components. Because of the oxide gate structure of these devices, they are extremely susceptible to destruction caused by the discharge of static electricity through their inputs. Note that many of the driver transistors in the Model 4210 are power MOS devices; they are susceptible to static damage just as CMOS ICs are. Because of this risk, certain precautions must be taken when working on these circuits.

Hazard of Static Electricity

The voltage levels present from static buildup due to walking over carpeted floors, movement of woolen or synthetic clothes over chair seats, workbenches, etc., are high enough to destroy CMOS circuitry when performing repair work. Ideally, all tools, soldering irons, etc., should be grounded, and work should be conducted on a grounded metal workbench, with grounding straps worn on the wrists of personnel. It is recognized that in most field repair situations, such precautions are impractical. However, certain extreme hazards must be avoided.

1. ***Never perform any work in a room with a carpeted floor.***

2. ***Always roll up work clothes' sleeves so that the arms are in contact with the working surface.***

3. ***Avoid using a work surface made of an extremely good insulator.***

Formica or glass are good insulators and should be avoided. A metal surface is best; a wood surface is acceptable. Conductive grounding mats are available for work stations and are worthwhile if much repair is to be done.

4. ***The degree of hazard depends on the level of humidity.***

Be particularly careful if the work area is extremely dry, or if the work is being done in the winter, when indoor forced heating and low temperatures outdoors can cause the relative humidity level to be very low.

5. ***Keep yourself grounded when handling disassembled equipment.***

When arriving at the work area, after a unit has been opened for repair, make an effort to always be touching the metal chassis before touching any of the circuit components.

6. ***Be especially careful handling the***

CMOS integrated circuits when they are removed from the rest of the circuitry.

Simply being connected to the rest of the circuitry provides some protection. Most of the circuitry is well-protected from damage caused by static discharge when the unit is powered up. However, an IC should never be replaced when the unit is turned on.

7. ***Individual CMOS semiconductors and built-up printed circuit boards should always be transported in conductive packaging.***

Foil is satisfactory; metallized plastic bags are also available and work well. Ordinary plastic bags and pink poly are not satisfactory unless the legs or leads of the semiconductor are also stuck into a block of black conductive foam. Do not accept replacement components that you purchase if they do not come in marked, protective packaging. They may already be destroyed. Do not use them.

8. ***Once assembled and soldered, printed circuit boards are easily damaged by improper repair procedures.***

Do not attempt to remove components, particularly ICs, from printed circuit boards unless skilled at this procedure. A defective component may be located, changed, and the unit still not work, if too much heat or pressure has broken the foil traces or pulled the cores from holes on the board.

Contact Customer Service - If trouble symptoms persist and cannot be located, call the Customer Service Department, at (800) 228-4373 except outside the U.S.A. call (402) 474-2233.

INSTRUCTION MANUAL

ISCO MODEL 674 RAIN GAUGE

PART # 60-3283-011

COPYRIGHT 1992
BY
Isco, Inc.
531 Westgate Boulevard
Lincoln, Nebraska, U.S.A. 68528
PHONE: (800) 228-4373
FAX: (402) 474-6685

Outside the U.S.A.,
call (402) 474-2233
ISSUED: September 1, 1992
Rev. D: 11-10-96

FOREWORD

This instruction manual is designed to help you gain a thorough understanding of the operation of the equipment. Isco recommends that you read this manual completely before placing the equipment in service.

Although Isco designs reliability into all equipment, there is always the possibility of a malfunction occurring. You can use this manual to help in diagnosing and repairing the malfunction, if possible.

If the malfunction persists, call or write the Isco Customer Service Department for assistance. (Address: Isco Inc., Environmental Division, 531 Westgate Boulevard, Lincoln, NE 68528-1586; Phone: [800] 228-4373 or [402] 474-2233 Fax: [402] 474-6685.) Simple difficulties can often be diagnosed over the phone. If it is necessary to return the equipment to the factory for service, please follow the shipping instructions provided by the Customer Service Department, including the use of the **Return Authorization Number** specified. **Be sure to include a note describing the malfunction.** This will aid in the prompt repair and return of the equipment.

Isco welcomes suggestions that would improve the information presented in this manual or enhance the operation of the equipment itself.

Figure 1. Isco Model 674 Rain Gauge (shown with cover removed)

MODEL 674

ISCO RAIN GAUGE

Description and Operation - The Isco Rain Gauge is a precision instrument for accurately measuring rainfall. Using a tipping bucket, the rain gauge provides accurate measurement from 0.01 to 22 inches per hour. The rain gauge is mounted inside a steel cylinder and has an eight-inch opening on top to collect rain. Rain falls through a screen into a funnel. From the funnel, rain collects in one side of a two-chambered plastic bucket mounted on jewelled pivots. When rain fills the chamber, the bucket tips, draining the water and exposing the other chamber to fill. When that chamber fills, the bucket tips back and the process begins anew. Each time the bucket tips from one side to the other a magnet passes over a reed switch, momentarily closing the normally open contacts. This contact closure provides a short-duration output pulse from the rain gauge for each 0.01 inch of rain.

Applications - When connected to a flow meter, the rain gauge enables the flow meter to print rainfall data on its chart or store rainfall data in memory. It also lets the flow meter actuate an associated Isco Automatic Wastewater Sampler. Typical applications include monitoring of storm water runoff, inflow and infiltration studies (I&I), and combined sewer overflow monitoring You can also use the rain gauge for any other general-purpose rainfall measurement as long as the associated equipment is electrically compatible.

Materials and Construction - The rain gauge is constructed of steel, stainless steel, aluminum, and plastic. All metal parts are coated, plated, or painted to ensure a durable, ruggedly tough instrument capable of resisting deterioration from exposure to the elements. Screens cover all openings, preventing clogging by leaves, insects, or other debris. The powder-coated steel sleeve protects the internal parts. The jewelled-pivot mounting for the tipping bucket provides long life. A built-in bubble level makes leveling the rain gauge after installation easy. A 50-foot cable terminated in an M/S connector attaches the rain gauge to the flow meter or to other equipment.

CAUTION

*The rain gauge is factory-calibrated and adjusted. Do **not** attempt to make any adjustments to the jewelled-pivot screws. You may damage the jewel bearings.*

Location of the Rain Gauge - Location affects the accuracy of the rainfall catch because the prevailing winds may tend to carry the rain away from the gauge. There are advantages and disadvantages to most sites. Sites may be either open or protected. Totally open sites affect the accuracy of the catch if the rain is carried on strong winds, but are satisfactory if rainstorms are generally calm. With no nearby vegetation the characteristics of the site will not tend to change over time, which is an advantage. Where strong winds are characteristic of storms, protected sites are generally preferable. This is because the effect of the wind on the rainfall catch is reduced. The presence of small groups of objects or objects of varying heights around the gauge can also affect accuracy by producing eddy currents in the wind which will interfere with the catch.

Suggested Siting - Groups of objects of uniform height (such as trees) in the vicinity of the gauge are beneficial for an accurate catch by acting as a windbreak while not interfering with the catch. Mounting the rain gauge in the clearing of an orchard or a grove of trees would be a recommendation for a good site. The **height** of the surrounding objects should not exceed **twice their distance** from the rain gauge. If vegetation serves as a windbreak, understand that growth will greatly change the conditions of the site with the passage of time. What may originally have been a good site may not always remain one.

Vegetation grows over dramatically over time. Any construction nearby taking place after the installation may also make a site undesirable by altering the wind currents and rainfall patterns around the gauge. Under no circumstances should any nearby object be allowed to grow above or hang directly over the gauge. The rain gauge is solidly built to withstand years of outside use; however, vandals could ruin it. Always try to install the rain gauge where it will be protected from vandalism. Avoid installation in low places where runoff from heavy storms could flood the gauge or wash it away. The rain gauge would not be hurt by submersion, but it would be unable to measure. Do not drop the rain gauge or expose it to shock; that could damage the jeweled bearings.

Installation - Installation of the rain gauge is simple. Just follow the procedure listed below. Steps 7 and 8 are optional depending on the requirements of your particular installation.

1. Unpack the rain gauge from the shipping box. Save the box and packing to return the rain gauge to Isco if that becomes necessary. Remove the insert that holds the tipping bucket. Remove the outer tube (white cover with funnel) from the rain gauge by unsnapping the two latches on the side.

2. Locate the bottom (mounting) plate of the rain gauge. This is golden-colored metal. Mount this plate securely to a stable horizontal surface that is relatively level. Isco suggests using corrosion-resistant hardware for mounting. The mounting holes will accommodate hardware as large as ¼ inch in diameter.

3. This is **very important**: Level the rain gauge by adjusting the three thumbscrews on the base until the bubble in the bubble level is exactly centered.

4. Carefully remove the rubber band used to secure the tipping bucket assembly. Do not apply pressure to the bucket or the pivot arm. Do not attempt any adjustments.

5. Reinstall the protective outer tube on the rain gauge.

6. Route the cable from the rain gauge to the flow meter. Coil any extra wire by the flow meter.

7. If necessary, you can increase the distance between the flow meter and the rain gauge to **1,000 feet** (maximum) by splicing a **two-wire # 18 AWG** cable (user- supplied) between the Isco-provided cable and the rain gauge.

8. Disconnect the Isco cable from the terminal block inside the rain gauge and splice the user-supplied cable to that end of the Isco cable. If the wiring and the splice will be exposed to the weather, use wire appropriate for outdoor use and insulate the splice properly. A weatherproof box may be necessary. Do ***not*** cut the M/S connector from the Isco cable unless you are connecting the rain gauge to equipment that does not have a compatible connector. You will not be able to reconnect it easily.

Maintenance - The Isco Rain Gauge is built of quality materials to withstand years of exposure to the elements. Normally, no maintenance is required. Once a year (or more often if conditions warrant) you may want to remove the cover and check the gauge to see that it has not been affected by the buildup of dust, debris, or insect infestation. The rain gauge is factory-calibrated and needs no further adjustment. If your installation is temporary and you intend to move the rain gauge from site to site, use care in transporting the unit. Again, you could damage the jewelled pivots for the tipping bucket if you expose the rain gauge to a severe shock, such as by dropping it. If you move the rain gauge frequently, always secure the tipping bucket with a rubber band and use the original packing box to protect the unit during transport. Repack the rain gauge as it was originally shipped to you if you need to return it to Isco.

Electrical Considerations - The electrical output from the Isco Rain Gauge is the rapid contact closure of a normally open reed switch. The rain gauge is **not** itself a powered device. It contains neither batteries nor transformer and does not connect to the AC line. Electrically, it is a "dry contact" switch, with power supplied from whatever device it controls. When you connect the rain gauge to an Isco Flow Meter, the current through the switch contacts is very low and there is no problem with line losses or damage to the switch contacts. However, if you plan to use the rain gauge for general-purpose rain measurement with other types of equipment not specified by Isco, please note the following:

CAUTION

The reed switch is rated for pilot duty only! The sealed contacts are limited to 10 watts (or 10 VA), 200 VDC maximum. Exceeding these limits may cause welding or rupturing of the reed switch, ruining it. For safety considerations, Isco recommends connection only to equipment supplying 30 volts or less, AC or DC.

Be particularly careful using the rain gauge with equipment supplying DC voltages at higher current loads or equipment presenting an inductive load to the reed switch. *Never* connect the rain gauge directly to any equipment where enough current passes to strike an arc when the contacts switch. You should always buffer such equipment with a solid state switch (transistor, IC, SCR, etc.) or a sensitive relay.

Table 1
Technical Specifications
for the Isco Rain Gauge

Type:	Tipping bucket.
Orifice:	8 inches (20 cm) diameter.
Sensitivity:	0.01 inches (0,25 mm) or 0,1 mm (0.004 inches).
Accuracy: (*Metric*) (*English*)	± 1 ½ % at 5 cm/hr; + 3.5, –9% up to 13 cm/hr. ± 1% at 2 inches/hr; + 3, –4% up to 5 inches/hr.
Capacity: (*Maximum*)	*Metric*: 38 cm/hr; *English*: 22 inches/hr.
Connector Pinout:	Pin A - Red, + 12VDC from Flow Meter; Pin D - Black Output from Rain Gauge
Output Signal:	Contact closure, 50 milliseconds minimum duration.
Switch Type:	Normally open, encaps. reed; 10 W 200 VDC, 0.5 A
Height and Diameter	13 inches (33 cm); 9 ½ inches (24 cm) at base.
Weight:	10 lbs (4.5 kg).
Operating Temperature:	32° to 140° F (0° to 60° C).
Storage Temperature:	–40° to 140° F (–40° to 60° C).

Replacement Parts List - The following page contains a list of replacement parts for the Isco Rain Gauge and an illustration showing the location of these parts.

Figure 2. Replacement Parts List Illustration

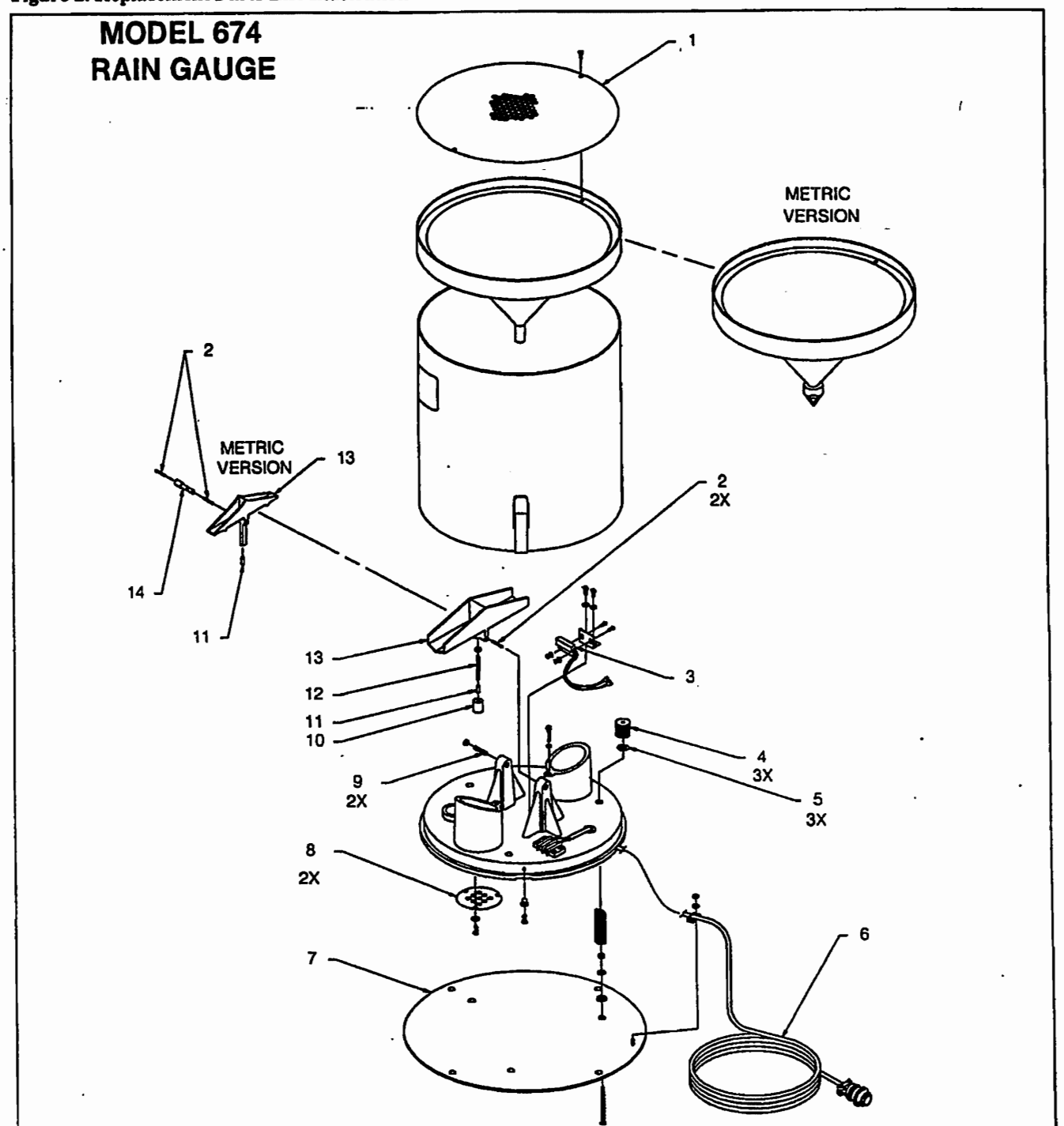

ITEM	INVENTORY NO.	DESCRIPTION
1	603283023	INLET SCREEN MESH
2	603283009	JEWEL BRG PVT SST
3	410991001	SENSOR MAG PRXTY.175/.800 SPST
4	603283004	LEVEL ADJUSTING KNOB
5	233042800	NYLON WASHER .253 x .506 x .01
6	603004149	CBL ASSY RAIN GAUGE 50'
7	603284003	MOUNTING PLATE ASSY
8	603283006	DRAIN SCREEN
9	201900000	SPRING LOADED VEE JEWEL BEARING
10	603283012	MAGNET MOUNT
11	209020400	MAGNET .12 DIA x 3/8 LONG
12	603283016	MOUNTING ROD
13	603284004	TIPPING BUCKET ASSY
	603283029	TIPPING BUCKET METRIC
14	603283030	PIVOT SHAFT

one year, limited

Warranty

Please read before instrument setup.

ISCO INSTRUMENTS HAVE A ONE YEAR LIMITED WARRANTY COVERING BOTH PARTS AND LABOR. Should any instrument become defective due to faulty parts or workmanship within the guarantee period, it will be repaired at the factory at no charge to the customer. Isco will pay **SURFACE** transportation charges both ways within the contiguous United States if the instrument proves to be defective **WITHIN 30 DAYS** from the date of shipment. Throughout the remainder of the guarantee period, the customer will pay transportation charges to return the defective instrument to Isco, and Isco will pay **SURFACE** transportation charges to return the repaired instrument to the customer. Isco will not pay air freight or packing and crating charges. The warranty period begins with the shipping date of the instrument to the original purchaser. All requests for warranty service must be received within the warranty period.

At the convenience of Isco, Isco may reimburse the customer to have the repairs performed by a qualified technician in the customer's locality. Authorization must be granted prior to the time any repair is performed.

ISCO'S EXCLUSIVE LIABILITY IS LIMITED TO REPAIR OR REPLACEMENT OF DEFECTIVE INSTRUMENTS. UNDER NO CIRCUMSTANCES IS ISCO LIABLE FOR CONSEQUENTIAL DAMAGES. THIS WARRANTY IS EXPRESSLY IN LIEU OF ALL OTHER WARRANTIES AND OBLIGATIONS AND ISCO SPECIFICALLY DISCLAIMS ANY WARRANTY OF MERCHANTABILITY OR FITNESS FOR A PARTICULAR PURPOSE. The following are not covered by this warranty: Expendable items such as charts, pens, suction and pump tubing and glassware; damage due to corrosion, abuse, accident or alteration; and suitability for any specific purpose.

OUTSIDE THE WARRANTY PERIOD, REPLACEMENT PARTS AND REPAIR LABOR ARE GUARANTEED FOR 90 DAYS.

The warrantor is Isco, Inc., Lincoln, Nebraska, U.S.A.

INSTRUCTIONS FOR RETURNING INSTRUMENTS FOR REPAIR.

Before returning any instrument for repair, call or write our service department for instructions. Simple difficulties can often be diagnosed over the phone.

Pack the instruments carefully, preferably in its original carton, and ship to the attention of the service department. U.P.S. or motor freight is generally the best method except for very small, non-fragile items which can be sent by insured parcel post. **BE SURE TO ENCLOSE A NOTE EXPLAINING THE DEFECT AND A PURCHASE ORDER AUTHORIZING THE REPAIR.**

Return equipment to:
Isco, Inc.-Environmental Division
531 Westgate Blvd.
Lincoln, NE 68528-1586, U.S.A.
Mailing Address: P.O. Box 82531, Lincoln, NE 68501-2531, U.S.A.
Phone: (402) 474-2233 or (800) 228-4373 (U.S.A.)
Fax: (402) 474-6685

ISCO®

June, 1995

E-9 – Gabion Manufacturer Data

Contact Information:

Terra Aqua Land Water Gabion Systems
1415 North 32nd Street
Ft. Smith, AR 72904
501-785-5344

Administrative Office:
P. O. Box 7546
Reno, NV 89510
775-828-1390
www.terraaqua.com

TerraAqua LandWater

GABION SYSTEMS

GALVANIZED GABION SPECIFICATION

SCOPE

This specification covers the use of galvanized steel wire mesh baskets filed with stone used as retaining walls, slope paving, river bank protection, outfall structures, weirs and drop structures, etc.

DEFINITIONS

a) Gabions are defined as galvanized steel wire mesh box-shaped baskets, of various sizes. The baskets are filled on site with clean, hard stones.

b) The selvedges of the gabions are the thicker perimeter and edge wires to which the wire mesh is securely tied to withstand sudden or gradual stress from any direction.

c) Reinforcing wires are the thicker wires incorporated into the netting during fabrication.

d) The diaphragms are internal wire mesh partitions which divide the gabion into cells.

e) Tiger-Tite Interlocking Fastener (TM) is used to assemble and join gabion units as an alternate t lacing wire to speed gabion construction time.

f) Lacing or binding wire is the wire used to assemble and join the gabion units.

g) Connecting wires are the internal wires used to prevent the gabions from bulging.

h) Tact Ties (TACT) are fabricated, preformed internal cross tie wires.

FABRICATION

Galvanized Steel Wire Mesh Gabions. Gabions shall be fabricated in such a manner that the sides, ends, li and diaphragms can be assembled at the construction site into rectangular baskets of the sizes specified ar shown on the drawings. Gabions shall be of single unit construction; the base, lid, ends, and sides shall b either woven into a single unit or one edge of these members connected to the base section of the gabion such a manner that strength and flexibility at the connecting point does not compromise the engineer structural design of the gabion. Where the length of the gabion exceeds one and one-half its horizon width, the gabion shall be divided by diaphragms of the same mesh and gauge as the body of the gabic into cells whose length does not exceed the horizontal width. The gabion shall be furnished with t necessary diaphragms secured in proper position on the base in such a manner that no additional tying required at this juncture.

Non-Raveling. The wire mesh is to be fabricated in such a manner as to be non-raveling. This is defined as the ability to resist pulling apart at any of the twists or connections forming the mesh when a single wire strand in a section of mesh is cut.

MATERIALS

Galvanized Steel Wire Mesh Gabions: Gabion basket units shall be of non-raveling construction and fabricated from a double twist by twisting each pair of wires through three half turns developing the appearance of a triple twist. The hexagonal mesh shall be hot dipped galvanized steel wire having a diameter of 0.120 inches (US gauge 11) after galvanization. The steel wire used shall be galvanized prior to weaving into mesh. All gabion diaphragams and frame wires shall equal or exceed Federal Specification QQ-W-461H, possess a maximum tensile strength of 70,000 PSI with a Finish 5, Class 3 zinc coating in accordance with the current ASTM A-641. The weight of zinc coating shall be determined by ASTM A-90. The grade of zinc used for coating shall be High Grade or Special High Grade as prescribed in ASTM B-6, Table 1. Uniformity of coating shall equal or exceed four 1-minute dips by the Preece test, as determined by ASTM A-239. The mesh opening shall be hexagonal in shape and uniform in size measuring not more than 3 1/4 inches by 4 1/2 inches. Selvedge or perimeter basket frame wire shall be of a heavier gauge than the mes wire with a diameter of 0.150 inches after galvanization. Lacing and connecting wire shall meet the sar specifications as the wire used in the gabion body except that its diameter shall be of 0.091 inches (US gauge 13) after galvanization. The use of alternate wire fasteners shall be permitted in lieu of tie wire providing the alternate fastener produces a four (4) wire selvedge joint with a strength of 1400 lbs. per linear foot while remaining in a locked and closed condition. Properly formed interlocking fasteners shall be spaced from 4 to 6 inches and have a minimum 3/4 square inch inside area to properly confine the required selvedge wires. Tiger-Tite Interlocking Fasteners are an approved alternate joint material. The Interlocking Wire Fastener shall meet material specification ASTM A-764, Finish 2, Class 1, Type 3.

All of the above wire diameters are subject to tolerance limit of 0.004 inches in accordance with ASTM A-641.

GABION STANDARD SIZES

Letter Code	Dimensions	No. of Cells	Capacity Cubic Yards
A	6' x 3' x 3'	2	2
B	9' x 3' x 3'	3	3
C	12' x 3' x 3'	4	4
D	6' x 3' x 1'6"	2	1
E	9' x 3' x 1'6"	3	1.5
F	12' x 3' x 1'6"	4	2
G	6' x 3' x 1'	2	0.666
H	9' x 3' x 1'	3	1
I	12' x 3' x 1'	4	1.33

MESH DEFORMATION

The wire mesh shall have deformability sufficient to permit a minimum mesh elongation equivalent to 10% of the unstretched length of the mesh test section without reducing the gauge or tensile strength of the individual wire strands to values less than those for similar wire, one gauge smaller in diameter.

GABION FILL

The material used for gabion fill shall be clean, hard stone with pieces ranging from four (4) to eight (8) inches in the greatest dimension. Stone filling shall not exceed a 12 inch vertical drop above the gabion basket.

ASSEMBLING AND PLACING

a) Each gabion shall be assembled by tying or fastening all untied edges. The binding wire shall be tightly looped around every other mesh opening along the seams in such a manner that single and double loops are alternated. The Tiger-Tite Interlocking Fastener shall be applied at approximately 4" to 6" intervals. A minimum of two (2) interlocking fasteners per 1 foot, three (3) interlocking fasteners per 1.5 foot and six (6) interlocking fasteners per 3 foot vertical or horizontal edge seam is required.

b) A line of empty gabions, with joints staggered, shall be placed into position according to the contract drawings. Binding wire or Interlocking Fasteners shall be used to secure each unit to the adjoining one along the vertical reinforced edges and the top selvedges. An approved corner closure tool shall be used to adjoin adjacent gabions to insure a tight, neat seam and minimize gabion wire joint deformation. The base of the empty gabions placed on top of a filled line of gabions shall be tightly wired or fastened to the latter at front and back. The lid shall be secured with an approved closure tool to insure proper closure without excessive mesh deformation.

c) To achieve optimum alignment and finish for retaining walls, a minimum amount of stretching may be required.

d) Connecting wires shall be inserted during the filling operation in the following manner:

<u>36" GABIONS & 18" GABIONS FOR VERTICAL STRUCTURES ON THE EXPOSED FACE</u>

I) Gabions shall be filled to a depth of twelve (12) inches.

II) For end units, two connecting wires or preformed TACT Tie wires in each direction shall be tightly tied to opposite faces of the end gabion cell at a height of twelve (12) inches above the base. Internal compartments shall have internal connecting wires connecting front face to back face of the gabion. Preformed TACT Ties are placed diagonal in the gabion cell.

III) Gabions shall be filled a further depth of twelve (12) inches, and two connecting or preformed TACT Tie wires shall similarly be placed at this level.

IV) Gabions shall be filled to the top. Care shall be taken to insure gabion is not under filled.

All connecting wires shall be looped around two mesh openings and the ends of the wires shall be securely twisted to prevent their loosening. TACT Tie wires envelope one horizontal twist on the front face and

Gabion Placement Inspection Forms

Gabion Installation Inspection

Project Name: Maxey Flats
Project No.: 763514
Weather: P/C, 70s

Date: 9-14-00
Inspector: Dave Marcum

Surface area and location covered during shift:
Emergency spillway channel, starting from the bottom.

Provide explanatory notes if the answer to any of the following questions is "no". Include any remedial steps required.

	Yes/No	Note No.
• Are the gabions installed in a manner that prevents damage to underlying materials"	Yes	
• Are the gabions free from material defects and assembled properly?	Yes	
• Are the gabions installed as per Drawing C33?	Yes	

One Form Per Shift When Gabions Are Installed

Notes:

E-10 – Southeast Cap Geomembrane Liner Warranty

Contact Information:

AGRU America
600 Rockmead, Suite 150
Kingwood, TX 77339
800-373-2478
www.agruamerica.com

agru america

LIMITED MATERIAL WARRANTY

CUSTOMER NAME:	Maxey Flats Site IRP, LLC State of Kentucky
PROJECT:	Maxey Flats, Hillsboro, Kentucky
TYPE MATERIAL:	60 mil HDPE smooth geomembrane

The company, referred to herein as AGRU/AMERICA, Inc., warrants that AGRU/AMERICA, liners will correspond to the specifications as indicated in AGRU/AMERICA technical records, catalogs, guidelines and test certificates at the time when sold.

AGRU AMERICA warrants that the material is faultless and resistant for a period of twenty (20) years, prorated from the point of time sold when properly installed, covered and used for: buried landfill

AGRU/AMERICA'S liability under this warranty is not applicable when damage is caused by:

Natural phenomena as thunder storms, floods, earthquakes, acts of war or other acts of God

Chemicals which are not suitable for HDPE liners according to chemical resistance guides or from experience.

Further, AGRU/AMERICA is not liable for damages due to the misapplication, incorrect installation, and damages resulting from any kind of inadequate handling. In the event that any defects are noticed in the liner, AGRU/AMERICA must be notified in writing within thirty (30) days.

AGRU/AMERICA shall be given an opportunity to ascertain the cause of damages. AGRU/AMERICA reserves the right to decide how damages will be settled.

Under no circumstances will AGRU/AMERICA assume liability for consequential damages due to defective liner or incorrect installation. AGRU/AMERICA will not be responsible for failures arising from incorrect welding of seams in the installation.

Further, AGRU/AMERICA's warranty will be void in the event that the buyer performs repairs or makes alterations without the express approval of AGRU/AMERICA in writing. AGRU/AMERICA's maximum liability under this warranty will not exceed the purchase price of liner and will only be in force when payment has been made in full and further claims regardless of the legal suppositions are not applicable.

This warranty is only valid on condition that the generally approved technical standards and in particular the guidelines for the installation of the liner are followed.

For AGRU/AMERICA, Inc.

Bennie L Underwood 2MAY02
Authorized Official (Date)
Project Coordinator for Maxey Flats Site IRP, LLC

W Barker 4.25.02
Paul W. Barker, Vice President (Date)

MID AMERICA LINING CO.

"The Fabrication & Installation Specialists"

FIVE YEAR PRO-RATED INSTALLATION
LIMITED WARRANTY
FOR MID AMERICA LINING COMPANY
MEMBRANE LINERS

Project Name:	**MAXEY FLATS DISPOSAL SITE / STATE OF KENTUCKY**
Type of Liner:	60 mil HDPE smooth
Installation Date:	September 11, 1999

Subject to the terms and conditions set forth below, Mid America Lining Company (MAL) warrants to Maxey Flats Disposal Site / State of Kentucky for a period of five years from the date upon which installations at the above referenced project was performed in a good and workmanlike manner. (The "Warranty")

The Warranty does not cover any damage to the liner, or defects in the liner found to have been a result of misuse; abuse, or conditions existing after installation including, but not limited to, malicious mischief; vandalism; sabotage; fire; acts of God; acts of public enemy; acts of war or public rebellion; severe weather conditions of all types; damage due to all of the following: ice, wind, subsidence, chemicals harmful to the liner, machinery, foreign objects or animals.

The Warranty is subject to the following conditions:

1. The liner shall have been installed on compacted soil free of sharp protrusions and foreign objects to a depth of 6 inches.

2. This certification is based on observations of the surface of the subgrade only. No subterranean inspections or tests have been performed by MAL and MAL makes no representations or warranties regarding conditions which may exist below the surface of the subgrade.

3. If "fill" is used over the top of the liner, it shall be free of all foreign and sharp objects.

Failure to comply with these conditions in all respects will void the Warranty.

In the event circumstances are found to exist which Maxey Flats Disposal Site / State of Kentucky believes may give rise to a claim under the Warranty, the following procedure shall be followed:

a. Maxey Flats Disposal Site / State of Kentucky shall give Mid America Lining Company written notice of the facts and circumstances of said claim within 60 days of becoming aware of said facts and circumstances. Said notice shall be by registered or certified mail, return receipt requested, postage prepaid, addressed to Michael J. Joslin, Mid America Lining Company, 420 East Jackson Street, Union City, TN 38261.

   The words "WARRANTY CLAIM" shall be clearly marked on the face of the envelope in the lower right hand corner. Said notice shall contain, at a minimum, the name and address of the owner, the name and address of the installation, the date upon which the installation was completed and the facts known to Maxey Flats Disposal Site / State of Kentucky upon which the claim is based. Failure to provide MAL with timely notice of the claim shall void the Warranty.

b. Within twenty days after receipt of the notice described in paragraph a, above, MAL shall inspect the allegedly defected liner. Maxey Flats Disposal Site / State of Kentucky shall pay the expenses incurred by MAL making the inspection, in the event MAL determines that the claim is not covered by the Warranty.

c. MAXEY FLATS DISPOSAL SITE / STATE OF KENTUCKY SHALL NOT REPAIR, REPLACE, REMOVE, ALTER, OR DISTURB ANY LINER, NOR SHALL ALLOW ANYONE ELSE TO REPAIR, REPLACE, REMOVE, ALTER, OR DISTURB ANY OF THE LINER PRIOR TO SUCH INSPECTION PROVIDED, HOWEVER, MAXEY FLATS, MAY TAKE EMERGENCY ACTION NECESSARY TO PREVENT DAMAGE TO PERSONS, PROPERTY OR THE ENVIRONMENT. A FAILURE TO STRICTLY COMPLY WITH THIS PARAGRAPH SHALL VOID THE WARRANTY.

d. If it is determined that the claim is covered by the Warranty, MAL shall either repair or replace so much of the liner as is defective. THE REMEDIES PROVIDED HEREIN ARE THE EXCLUSIVE REMEDIES AVAILABLE UNDER THE WARRANTY. Any determination as to whether the claim is covered by the Warranty or what constitutes the appropriate method of remedying a defect will be made by MAL after consultation with Maxey Flats Disposal Site / State of Kentucky.

e. Maxey Flats Disposal Site / State of Kentucky agrees that it shall provide MAL with clean, dry and unobstructed access to the damaged or defective liner in order for MAL to perform the inspections and repairs which may be required pursuant to the Warranty. MAL shall not be liable for any costs relating to providing access to the liner.

THE REMEDIES PROVIDED TO MAXEY FLATS DISPOSAL SITE / STATE OF KENTUCKY, HEREIN ARE THE EXCLUSIVE REMEDIES AVAILABLE UNDER THE WARRANTY AND ARE INTENDED FOR THE SOLE BENEFIT OF MAXEY FLATS DISPOSAL SITE / STATE OF KENTUCKY NEITHER THE WARRANTY NOR ANY RIGHTS HEREUNDER SHALL BE ASSIGNABLE, EXCEPT WITH THE CONSENT OF MAL, WHICH CONSENT SHALL NOT BE UNREASONABLY WITHHELD. MAL SHALL HAVE NO LIABILITY UNDER THE WARRANTY SET FORTH ABOVE IS THE ONLY WARRANTY APPLICABLE TO THE LINER AND ALL OTHER WARRANTIES, EXPRESSED OR IMPLIED, INCLUDING, BUT NOT LIMITED TO, ANY WARRANTY OF MERCHANTABILITY OR FITNESS FOR A PARTICULAR PURPOSE ARE DISCLAIMED. IN NO EVENT SHALL MAL BE LIABLE IN CONTRACT, TORT OR OTHERWISE FOR ANY DIRECT, INCIDENTAL, SPECIAL OR CONSEQUENTIAL DAMAGES FOR, RESULTING FROM, OR IN CONNECTION WITH, THE USE OF THE LINER. IN THE EVENT THE EXCLUSIVE REMEDY PROVIDED HEREIN FAILS IN ITS ESSENTIAL PURPOSE, AND IN THAT EVENT ONLY, MAXEY FLATS DISPOSAL SITE / STATE OF KENTUCKY, SHALL BE ENTITLED TO RETURN OF THE PURCHASE PRICE FOR SO MUCH OF THE MATERIAL AS MAL DETERMINES TO HAVE VIOLATED THE WARRANTY PROVIDED HEREIN.

Except for the Warranty set forth above, no representation or warranty made by any sales or other representative of MAL, or any other person, concerning the liner shall be binding upon MAL.

This warranty shall not be effective until full payment has been made to MAL. Any waiver of the terms and conditions of the Warranty shall be in writing and signed by MAL. The failure to insist upon strict compliance with any of the terms and conditions contained herein shall not act as a waiver of strict compliance with all of the remaining terms and conditions of the Warranty and shall not operate as a waiver as to any of the terms and conditions of the Warranty as to future claims under the Warranty.

Mid America Lining Company

BY: Michael J. Joslin

Michael J. Joslin, President

I have read and agree to the terms and conditions of the Warranty.

BY: Bernie R. Underwood

TITLE: Project Coordinator for

COMPANY: Maxey Flats Site IRP, LLC

DATE: 2 MAY 02

MID AMERICA LINING CO.

"The Fabrication & Installation Specialists"

TWO YEAR PRO RATED INSTALLATION
LIMITED WARRANTY
FOR MID AMERICA LINING COMPANY
MEMBRANE LINERS

Project Name: **Maxey Flats Disposal Site / State of Kentucky**

Type of Liner: 36R PP 45R PP and 40 mil PP

Installation Date: July 1997

Subject to the terms and conditions set forth below, Mid America Lining Company (MAL) warrants to Maxey Flats Disposal Site / State of Kentucky for a period of two years from the date upon which installations at the above referenced project was performed in a good and workmanlike manner. (The "Warranty")

The Warranty does not cover any damage to the liner, or defects in the liner found to have been a result of misuse, abuse, or conditions existing after installation including, but not limited to, malicious mischief; vandalism; sabotage; fire; acts of God; acts of public enemy; acts of war or public rebellion; severe weather conditions of all types; damage due to all of the following: ice, wind, subsidence, chemicals harmful to the liner, machinery, foreign objects or animals.

The Warranty is subject to the following conditions:

1. The liner shall have been installed on compacted soil free of sharp protrusions and foreign objects to a depth of 6 inches.
2. If "fill" is used over the top of the liner, it shall be free of all foreign and sharp objects.

Failure to comply with these conditions in all respects will void the Warranty.

In the event circumstances are found to exist which the Maxey Flats Disposal Site / State of Kentucky believes may give rise to a claim under the Warranty, the following procedure shall be followed:

a. Maxey Flats Disposal Site / State of Kentucky shall give Mid America Lining Company written notice of the facts and circumstances of said claim within 60 days of becoming aware of said facts and circumstances. Said notice shall be by registered or certified mail, return receipt requested, postage prepaid, addressed to Michael J. Joslin, Mid America

Lining Company, 420 East Jackson Street, Union City, TN 38261.

The words "WARRANTY CLAIM" shall be clearly marked on the face of the envelope in the lower right hand corner. Said notice shall contain, at a minimum, the name and address of the owner, the name and address of the installation, the date upon which the installation was completed and the facts known to Maxey Flats Disposal Site / State of Kentucky upon which the claim is based. Failure to provide MAL with timely notice of the claim shall void the Warranty.

b. Within twenty days after receipt of the notice described in paragraph a, above, MAL shall inspect the allegedly defected liner. Maxey Flats Disposal Site / State of Kentucky shall pay the expenses incurred by MAL making the inspection, in the event MAL determines that the claim is not covered by the Warranty.

c. MAXEY FLATS DISPOSAL SITE / STATE OF KENTUCKY SHALL NOT REPAIR, REPLACE, REMOVE, ALTER, OR DISTURB ANY LINER, NOR SHALL ALLOW ANYONE ELSE TO REPAIR, REPLACE, REMOVE, ALTER, OR DISTURB ANY OF THE LINER PRIOR TO SUCH INSPECTION PROVIDED, HOWEVER, MAXEY FLATS DISPOSAL SITE, MAY TAKE EMERGENCY ACTION NECESSARY TO PREVENT DAMAGE TO PERSONS, PROPERTY OR THE ENVIRONMENT. A FAILURE TO STRICTLY COMPLY WITH THIS PARAGRAPH SHALL VOID THE WARRANTY.

d. If it is determined that the claim is covered by the Warranty, MAL shall either repair or replace so much of the liner as is defective. THE REMEDIES PROVIDED HEREIN ARE THE EXCLUSIVE REMEDIES AVAILABLE UNDER THE WARRANTY. Any determination as to whether the claim is covered by the Warranty or what constitutes the appropriate method of remedying a defect will be made by MAL after consultation with Maxey Flats Disposal Site / State of Kentucky.

e. Maxey Flats Disposal Site / State of Kentucky agrees that it shall provide MAL with clean, dry and unobstructed access to the damaged or defective liner in order for MAL to perform the inspections and repairs which may be required pursuant to the Warranty. MAL shall not be liable for any costs relating to providing access to the liner.

THE REMEDIES PROVIDED TO MAXEY FLATS DISPOSAL SITE / STATE OF KENTUCKY, HEREIN ARE THE EXCLUSIVE REMEDIES AVAILABLE UNDER THE WARRANTY AND ARE INTENDED FOR THE SOLE BENEFIT OF MAXEY FLATS DISPOSAL SITE / STATE OF KENTUCKY NEITHER THE WARRANTY NOR ANY RIGHTS HEREUNDER SHALL BE ASSIGNABLE, EXCEPT WITH THE CONSENT OF MAL, WHICH CONSENT SHALL NOT BE UNREASONABLE WITHHELD. MAL SHALL HAVE NO LIABILITY UNDER THE WARRANTY SET FORTH ABOVE IS THE ONLY WARRANTY APPLICABLE TO THE LINER AND ALL OTHER WARRANTIES, EXPRESSED OR IMPLIED, INCLUDING, BUT NOT LIMITED TO, ANY WARRANTY OF MERCHANTABILITY OR FITNESS FOR A PARTICULAR PURPOSE ARE DISCLAIMED. IN NO EVENT SHALL MAL BE LIABLE IN CONTRACT, TORT OR OTHERWISE FOR ANY DIRECT, INCIDENTAL, SPECIAL OR CONSEQUENTIAL DAMAGES FOR, RESULTING FROM, OR IN CONNECTION WITH, THE USE OF THE LINER. IN THE EVENT THE EXCLUSIVE REMEDY PROVIDED HEREIN FAILS IN ITS ESSENTIAL PURPOSE, AND IN THAT EVENT ONLY, MAXEY FLATS DISPOSAL SITE / STATE OF KENTUCKY, SHALL BE ENTITLED TO RETURN OF THE PURCHASE PRICE FOR SO MUCH OF THE MATERIAL AS MAL DETERMINES TO HAVE VIOLATED THE WARRANTY PROVIDED HEREIN.

Except for the Warranty set forth above, no representation or warranty made by any sales or other representative of MAL, or any other person, concerning the liner shall be binding upon MAL.

This warranty shall not be effective until full payment has been made to MAL. Any waiver of the terms and conditions of the Warranty shall be in writing and signed by MAL. The failure to insist upon strict compliance with any of the terms and conditions contained herein shall not act as a waiver of strict compliance with all of the remaining terms and conditions of the Warranty and shall not operate as a waiver as to any of the terms and conditions of the Warranty as to future claims under the Warranty.

Mid America Lining Company

BY: Michael J. Joslin

Michael J. Joslin, President

I have read and agree to the terms and conditions of the Warranty.

BY: Bennie L Underwood

TITLE: Project Coordinator for

COMPANY: Maxey Flats Site TRP, LLC

DATE: 2 MAY 02

agru america

LIMITED MATERIAL WARRANTY

CUSTOMER NAME:	Maxey Flats Corporation
PROJECT:	Maxey Flats, Hillsboro, Kentucky
TYPE MATERIAL:	60 mil HDPE smooth geomembrane

The company, referred to herein as AGRU/AMERICA, Inc., warrants that AGRU/AMERICA, liners will correspond to the specifications as indicated in AGRU/AMERICA technical records, catalogs, guidelines and test certificates at the time when sold.

AGRU AMERICA warrants that the material is faultless and resistant for a period of twenty (20) years, prorated from the point of time sold when properly installed, covered and used for: buried landfill.

AGRU/AMERICA'S liability under this warranty is not applicable when damage is caused by:

Natural phenomena as thunder storms, floods, earthquakes, acts of war or other acts of God

Chemicals which are not suitable for HDPE liners according to chemical resistance guides or from experience.

Further, AGRU/AMERICA is not liable for damages due to the misapplication, incorrect installation, and damages resulting from any kind of inadequate handling. In the event that any defects are noticed in the liner, AGRU/AMERICA must be notified in writing within thirty (30) days.

AGRU/AMERICA shall be given an opportunity to ascertain the cause of damages. AGRU/AMERICA reserves the right to decide how damages will be settled.

Under no circumstances will AGRU/AMERICA assume liability for consequential damages due to defective liner or incorrect installation. AGRU/AMERICA will not be responsible for failures arising from incorrect welding of seams in the installation.

Further, AGRU/AMERICA's warranty will be void in the event that the buyer performs repairs or makes alterations without the express approval of AGRU/AMERICA in writing. AGRU/AMERICA's maximum liability under this warranty will not exceed the purchase price of liner and will only be in force when payment has been made in full and further claims regardless of the legal suppositions are not applicable.

This warranty is only valid on condition that the generally approved technical standards and in particular the guidelines for the installation of the liner are followed.

For AGRU/AMERICA, Inc.

William J. Hlogosh 3/2/00
Authorized Official (Date)

P W Barker 11.12.99
Paul W. Barker, Vice President (Date)

E-11 – Fence Manufacturer Data

Contact Information:

Merchants Metals
A Division of MMI Products, Inc.
71347 County Road 23
New Paris, IN 46553-9145
800-831-4060
www.merchantsmetals.com

MERCHANTS METALS, A DIVISION OF MMI PRODUCTS, INC. 71347 COUNTY ROAD 23, P.O. BOX 6, NEW PARIS, INDIANA 46553-0006
TELEPHONE: (219)831-4060 FAX: (219)831-3515

MERCHANTS METALS
The First Name In Fence

Date: December 10, 2001

Customer:

Herb Geddes Fence
232 Industry Parkway
Nicholasville KY 40356

Project: IT Corp – Maxi Flats – Hillsboro, KY

This is to certify that the materials shipped on our invoice/shipping order number 4115640 dated 12/7/01 meets or exceeds the following certifications:

I. FABRIC Height: 72 Gauge: 9 Mesh: 2 Selvage: KT

A. Zinc Coated:
(X) ASTM A-392, Class I(1.2), RR-F-191 Class A
( ) ASTM A-392, Class II(2.0), RR-F-191 Class D
(X) Melted and Manufactured in the U.S.A.

B. Aluminum Coated:
( ) ASTM A-491, Class II(.40), RF-F-191 Class E
( ) Melted and Manufactured in the U.S.A.

C. Vinyl Clad:
Color: _____
( ) RR-F-191/1ASTM F668-96, Class 1
( ) RR-F-191/1 ASTM F668-96, Class 2A
( ) RR-F-191/1 ASTM F668-96, Class 2B
( ) Melted and Manufactured in the U.S.A.

II. FRAMEWORK

A. Galvanized Standard Pipe (Grade A): ASTM F1083 (1.8), RR-F-191/3B Class I (1.6)
(X) 1 5/8" O.D. weighing 2.27 lbs. per foot
( ) 1 7/8" O.D. weighing 2.27 lbs. per foot
( ) 2 3/8" O.D. weighing 3.65 lbs. per foot
(X) 2 7/8" O.D. weighing 5.79 lbs. per foot
(X) 4" O.D. weighing 9.10 lbs. per foot
( ) 6 5/8" O.D. weighing 18.97 lbs. per foot

B. Galvanized Pipe (Grade B): ASTM F-1043, Group 1C, RR-F-191/3D Class I
( ) 1 5/8" O.D. weighing 1.83 lbs. per foot
( ) 1 7/8" O.D. weighing 2.28 lbs. per foot
( ) 2 3/8" O.D. weighing 3.11 lbs. per foot
( ) 2 7/8" O.D. weighing 4.64 lbs. per foot
( ) 4" O.D. weighing 6.56 lbs. per foot

C. Rolled Form C-Section: ASTM A-570 (2.0), RR-F-191/3B Class II (2.0)
( ) 1 1/4" x 1 5/8" C-Rail weighing 1.34 lbs. per foot
( ) 1 7/8" x 1 5/8" Standard C weighing 2.30 lbs. per foot
( ) 2 1/4" x 1 5/8" Heavy C weighing 2.70 lbs. per foot

III. FITTINGS

A. Iron Castings: () Malleable: ASTM A-47, ASTM A-153 (A) (2.0)

B. Rolled and/or Stamped Fittings:
(X) Pressed Steel: ASTM A-123 (2.0), ASTM A-153-B2 (1.5)
(X) Aluminum

C. Bars: () 1/4 x 3/4: ASTM A-123 (2.0)
(X) 3/16 x 3/4: ASTM A-153-B2 (1.5) RR-F-191

D. Truss Rods: () 3/8 Rolled Thread: ASTM A-123, ASTM A-153, RR-F-191(1.2)

IV. ACCESSORIES

A. Barbwire – Gauge: 12-1/2 Points: 4
1. Galvanized: () ASTM A-121 Class I
(X) ASTM A-121 Class III
2. Aluminized: () ASTM A-585-92

B. Tension Wire-Gauge: ___
() ASTM-824-95, RR-F-191/4D
Type I () Aluminum Coated
Type II () Zinc Coated
() Class I .80 oz.
() Class II 1.20 oz.
Type III () Aluminum – Zinc Alloy Coated
() Class 30
() Class 45

C. Ties-Gauge: 9
1. Galvanized Steel: () ASTM F-626-96
2. Aluminum: (X) ASTM F-626-96

V. GATES

STATE: INDIANA
ELKHART COUNTY

MERCHANTS METALS, INC., MIDWEST DIVISION
A Division of MMI Products, Inc.

Michael W. Babcock

Sworn and subscribed to before me the 10th day of December 2001

RESIDENT OF ELKHART COUNTY
EXPIRATION DATE:

Joyce M. Gaskin
Notary Public Joyce M. Gaskin

JOYCE M. GASKIN
Notary Public, State of Indiana
County of Elkhart
My Commission Expires Sep 23, 2007

E-12 – Stream Sampler Manufacturer Data

Model 6712 Portable Samplers

Contact Information:

ISCO Inc./CM Kazmeir and Associates
1094 Mulberry Street
Loudon, TN 37774-1139
865-408-9500

ISCO Inc.
531 Westgate Boulevard
Lincoln, Nebraska 68528
800-228-4373
800-755-2965 (Technical Repair)
www.isco.com

INSTRUCTION MANUAL

6712 Portable Samplers

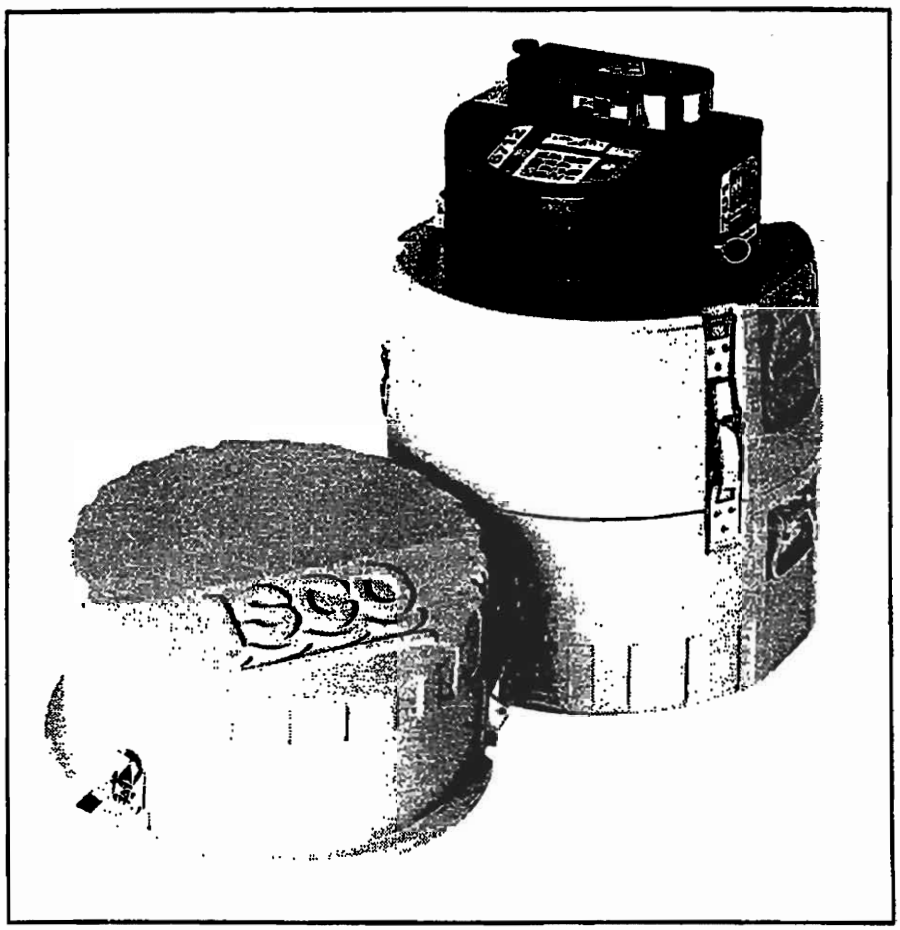

Part #69-9003-588 of Assembly #60-9004-334

Copyright © 2001
Issued: March 2001

P.O. Box 82531
Lincoln, Nebraska, 68501 USA
Phone: (402) 464-0231
Toll Free: (800) 228-4373 (USA, Canada, and Mexico)
FAX: (402) 465-3022

ISCO®

FOREWORD

This instruction manual is designed to help you gain a thorough understanding of the operation of the equipment. Isco recommends that you read this manual completely before placing the equipment in service.

Although Isco designs reliability into all equipment, there is always the possibility of a malfunction occurring. You can use this manual to help in diagnosing and repairing the malfunction, if possible.

If the malfunction persists, call or write the Isco Customer Service Department for assistance. (Address: Isco Inc., P.O. Box 82531, Lincoln, NE 68501; Phone: [800] 228-4373 or [402] 464-0231 Fax: [402] 465-3022.) Simple difficulties can often be diagnosed over the phone. If it is necessary to return the equipment to the factory for service, please follow the shipping instructions provided by the Customer Service Department, including the use of the **Return Authorization Number** specified. **Be sure to include a note describing the malfunction.** This will aid in the prompt repair and return of the equipment.

Isco welcomes suggestions that would improve the information presented in this manual or enhance the operation of the equipment itself.

Warnings and Cautions

The exclamation point within the triangle is a warning sign alerting you to important instructions in the instrument's reference manual.

Warnungen und Vorsichtshinweise

Das Ausrufezeichen in Dreieck ist ein Warnzeichen, das Sie darauf aufmerksam macht, daß wichtige Anleitungen zu diesem Handbuch gehören.

Symboles de sécurité

Ce symbole signale l'existence d'instructions importantes relatives au produit dans ce manuel.

Advertencias y Precauciones

Esta señal le advierte sobre la importancia de las instrucciones del manual que acompañan a este producto.

Warning: This instrument has not been certified for use in "hazardous locations" as defined by the National Electrical Code.

Pinch Point
Point de pincement

Warning: Pinch point. This symbol warns you that your fingers or hands will sustain serious injury if you place them between the moving parts of the mechanism near this symbol. Disconnect the battery or power supply before removing the pump cover.

Attention: Risque de pincement. Ce symbole vous avertit que les mains ou les doigts seront blessès sérieusement si vous les mettez entre les éléments en mouvement du mécanisme près de ce symbole. Déconnectez la pile ou débranchez l'échantilloneur avant de démonter la pompe.

Warning: Avoid hazardous practices! If you use this instrument in any way not specified in this manual, the protection provided by the instrument may be impaired; this will increase your risk of injury.

Attention: Éviter les usages hasardeux! Si vous utilisez cet instrument de toute manière autre que celles qui sont specifiées dans ce manuel, la protection fournie par l'instrument peur être affaiblie; cela augmentera votre risque de blessure.

Table of Contents

Chapter 1. Introduction

About this Manual 1-1
About 700 Series Modules 1-1
SDI-12 Sondes 1-2
Memory to Store Monitoring Data 1-2
Pump Requirements 1-2
6712 Standard and Compact Sampler Features 1-3
6712 Standard and Compact Sampler Construction Materials 1-7
Technical Specifications for the 6712 Compact and Standard Samplers 1-8
Connector Specifications 1-14

Chapter 2. Installation/Preparation

Checklist 2-1
Preparing the Sampler 2-2
  Installing the Distributor Arm and Discharge Tube 2-2
Installing Bottle Kits 2-4
  Aligning Bottle Kits in the Standard Tub 2-4
  Aligning Bottle Kits in the Compact Tub 2-7
Composite Bottle Kits 2-7
  Optional Five Gallon Bottle Base 2-7
Installing a Power Source 2-9
  Connecting an External 12-Volt DC Source 2-9
Suction Line 2-9
  Guidelines for Measuring and Cutting the Suction Line 2-9
  Attaching Suction Line to Pump Tube 2-9
Strainers 2-10
  Debris Deflector 2-10
  Alternative to Strainers 2-10
How Does the Sampler Work? 2-11
  Measuring Sample Volume 2-12
Installing the Sampler 2-12
  Icing the Samples 2-12
  Tips for Routing Suction Line 2-12
  Intake Placement 2-12
  Positioning a Sampler 2-12
  Using the Suspension Harness or ProHanger 2-12
Connecting External Instruments 2-13
  Flow Meter Connector 2-13
  Rain Gauge Connector 2-13
Locking the Sampler 2-14
Servicing the Sampler 2-15
Recovering the Sampler 2-15
Collecting Sample Bottles 2-15
  Compact Sampler Bottle Collection 2-15
  Standard Sampler Bottle Collection 2-16

Chapter 3. Getting Started

Getting Started 3-1
Using Menus and Entering Numbers 3-3
  Selecting Menu Options 3-3
  Entering Numbers 3-3
Quick View Screens 3-3
  Paging Through Quick View Screens 3-4
  Changing Settings in a Quick View Screen 3-4

Clock and Calendar 3-5
Menu Screens: Clock Start Times 3-6
Menu Screens: Site Descriptions and Program Names 3-6
Messages 3-7
Information Messages 3-7
Help Notes 3-7
Warning Messages 3-7
Operation Messages 3-8
Menu Trees 3-9

Chapter 4. Standard Programming

Changing to and from Standard and Extended Mode 4-1
Selecting Language, Units of Length 4-1
Programming Examples 4-2
Pacing 4-5
Trigger Pacing 4-5
Distribution 4-6
Sequential 4-6
Bottles Per Sample 4-6
Samples Per Bottle 4-6
Composite 4-6
Continuous Sampling 4-6
Start Times 4-8
How Do Start Times Work? 4-8
Sampler Enable/Disable 4-9
Running Programs 4-10
Run Time Screens 4-10
Module Readings 4-11
Interrupting a Running Program 4-11
Stop Program 4-12
Resume Program 4-12
View Data 4-12
Grab Sample 4-12
Pump Tube Alarm 4-12
Calibrate Volume 4-12
Cal/Adj Parameters 4-13
Adjust Pacing 4-13
Adjust Volume 4-13
Power Used 4-13
Other Functions 4-13
Manual Functions 4-14
Grab Samples 4-14
Calibrate Volume 4-15
Calibration Tips 4-15
Operating the Pump 4-16
Moving the Distributor Arm 4-16
Reports 4-17
Collecting Reports 4-17
Viewing the Data 4-17
Configuring Reports 4-18
Sampling Results Report 4-18
Combined Results Report 4-19
Summary Report 4-19
System IDs 4-26
Programming for 700 Series Modules 4-26

Chapter 5. Extended Programming

Extended and Standard Mode 5-1
One-Part and Two-Part Programs 5-1
Storage For Extended Programs 5-2
Selecting a Stored Program 5-2
Programming for 700 series Modules 5-3
Programming SDI-12 Sondes 5-4
Programming Examples 5-4
Suction Head 5-11
Rinses and Retries 5-12
Pacing 5-12
Event Pacing 5-12
Nonuniform Time Pacing 5-15
Nonuniform Clock Time Pacing 5-15
Nonuniform Interval Pacing 5-15
Random Interval Pacing 5-15
Distribution 5-16
Sequential 5-16
Bottles Per Sample 5-16
Samples Per Bottle 5-16
Composite 5-16
Multiple Bottle Compositing 5-16
Time Switching 5-17
Continuous Sampling 5-17
Sampler Enable 5-19
Sampler Enable Responses 5-21
Once Enabled Stay Enabled 5-21
Repeatable Enable 5-21
Sample at Enable or Disable 5-21
Delay To Start Of Sampling 5-21
Resetting the Sample Interval at Enable 5-21
Pauses/Resumes 5-22
Running Programs 5-23
Run Time Screens 5-23
Interrupting a Running Program 5-23
Adjust Enable 5-23
Adjust Suction Head 5-23
Sampling Reports 5-23
Other Functions 5-24
Software Options 5-24
Liquid Detector Enable/Disable 5-24
Programming Style 5-24
Measurement Interval 5-24
Dual Sampler Mode 5-25
Setting Up Dual Samplers 5-25
How Does It Work? 5-25
Bottle Full Detection 5-25
Display Backlighting 5-26
Event Marks 5-26
Bottle Number 5-26
Presample and Postsample Purge Counts 5-27
Serial Output 5-27
Hardware Setup 5-30
SDI-12 Sonde Setup 5-30

Rain Gauge Setup 5-30
I/O Pin Programming 5-30
Refrigerator Temperature 5-30
Analog Output 5-31
Dialout Alarms 5-31
Pager Numbers 5-32
Memory 5-32
Pressurized Lines 5-34
Command Driven Operation 5-34
Get Status 5-34
Take Sample 5-34
Command Driven Sampler Responses 5-35

Chapter 6. SDI-12 Sondes

SDI-12 Data Parameters 6-1
Scanning For Sondes 6-2
Isco Ready Sondes 6-2
Other sdi-12 Sondes 6-3
Sonde Setup - Storing Parameter Data 6-3
Sonde Calibration and Validation 6-4
The Calibration Screens 6-4
The Validation Screen 6-5
Disconnecting Sondes 6-5

Chapter 7. Maintenance

Maintenance Checklist 7-1
Cleaning Guidelines 7-1
Controller, Top Cover, Center Section, Retaining Ring, and Tub 7-1
Sample Bottles 7-1
Suction Line, Pump Tube, and Discharge Tube 7-1
Strainer 7-1
Cleaning Protocols for Priority Pollutants 7-2
Isco Glass Sample Bottles 7-2
Vinyl Suction Line 7-2
Teflon Suction Line 7-2
Isco Pump Tube 7-2
Maintenance Screens 7-3
Set Clock 7-3
Pump Tube Alarm 7-4
Internal Battery Warning 7-5
Diagnostics 7-6
Memory Test 7-6
Display Test 7-6
Pump Test 7-6
Distributor Test 7-6
Reinitialize Controller 7-6
Replacing the Pump Tube 7-7
Checklist For Replacing Pump Tube 7-7
Opening the Controller Case 7-9
Recharging the Desiccant 7-9
How To Recharge The Desiccant 7-9
Replacing the Internal Battery 7-11
Error Messages 7-12
Fatal Error 7-12
Warning Messages 7-12

Chapter 8. Software Options

Program Lock 8-1
Telephone Commands 8-2

Appendix A. Menu Flowcharts

Appendix B. Material Safety Data Sheets

Appendix C. General Safety Procedures

Appendix D. Replacement Parts

Appendix E. Accessories List

Order Information E-1
Controller, Center Sections, Top Covers, and Tubs E-1
Compact and Mini Sampler Bottle Kits E-1
Compact Sampler Bottle Kits E-1
Standard Sampler Bottle Kits E-1
Standard Sampler Bottle Kits (continued) E-2
Bottle Carriers, Retaining Rings and Racks, Bottle Inserts, Discharge Tubes E-2
Bulk Sets of Bottles with Lids E-2
General Accessories: Compact and Standard Samplers E-3
Pump Tubes, Suction Line, Strainers E-3
Data Collection Devices and Cables E-4
Power Sources and Chargers E-4
Modules, Rain Gauges, & Interfacing Instruments E-4
SDI-12 Data Acquisition Connect Cables E-5

List of Figures

Figure 2.1 ----Installing the Distributor Arm 2-2
Figure 2.2-----Placing the 24-bottle kit in a standard tub 2-4
Figure 2.3-----Placing the 12-bottle kit in a standard tub 2-5
Figure 2.4-----Placing the 8-bottle kit in a standard tub 2-5
Figure 2.6-----Placing the carrier in the compact tub 2-6
Figure 2.5-----Placing the 4-bottle kit in a standard tub 2-6
Figure 2.7-----Installing the composite tube guide 2-7
Figure 2.8-----Composite Bottles 2-8
Figure 2.9-----Identifying the Sampler Components 2-11
Figure 3.1-----Menu Tree for Standard Programming 3-9
Figure 4.2-----Sample Distribution 4-7
Figure 4.2-----Start Time Diagram 4-9
Figure 4.3-----Running a Program 4-10
Figure 4.4-----Taking a grab sample 4-14
Figure 4.5-----Reports: Program Settings 4-21
Figure 4.6-----Report: Sampling Results 4-22
Figure 4.7-----Report: Combined Results 4-23
Figure 4.8-----Report: Summary 4-25
Figure 5.1-----Sample Distribution 5-17
Figure 5.2-----Start Time Diagram for Sampler Enable Settings 5-18
Figure 5.3-----Event Mark Timing Diagram 5-26
Figure 6.1 ----SDI-12 Sonde Parameters 6-1
Figure 7.1-----Removing and Replacing the Pump Tube 7-8
Figure 7.2-----Placing the Pump Tube in the Liquid Detector 7-8
Figure 7.3-----Opening the Controller 7-10
Figure 7.4-----Main Circuit Board Connections 7-10
Flowchart 1 --6712 Menu Tree for Standard Programming A-1
Flowchart 2 --Standard Programming: Programming Screens A-2
Flowchart 3 --Standard and Extended Programming: Start Times A-3
Flowchart 4 --Standard Programming: Quick View; Programming Screens A-4
Flowchart 5 --Standard Programming: Quick View; Start Times A-5
Flowchart 6 --View Report A-6
Flowchart 7 --Maintenance Screens A-7
Flowchart 8 --Manual Functions Screens A-8
Flowchart 9 --Extended Programming: Programming Screens A-9
Flowchart 10-Extended Programming: Equipment Setup A-10
Flowchart 11-Extended Programming: Pacing and Distribution A-11
Flowchart 12-Extended Programming: Event Conditions A-12
Flowchart 13-Extended Programming: Programmed Sampler Enable A-13
Flowchart 14-Extended Programming: Quick View; Programming Screens A-14
Flowchart 15-Extended Programming: Quick View; Equipment Set-Up A-15
Flowchart 16-Extended Programming: Quick View; Pacing and Distribution A-16
Flowchart 17-Extended Programming: Quick View; Programmed Sampler Enable A-17
Flowchart 18-Extended Programming: Normal View; Software Options A-18
Flowchart 19-Extended Programming: QuickView; Software Options A-19
Flowchart 20-Extended Programming: Normal View; Hardware A-20
Flowchart 21-Extended Programming: Quick View; Hardware A-21
Flowchart 22-Analog Output and Dialout Screens A-22
Flowchart 23-Analog Output and Dialout Quick View Screens A-22
Flowchart 24-SDI-12 Sonde Screens A-23

List of Tables

1.1 6712 Standard and Compact Sampler Features 1-3
1.2 6712 Standard and Compact Sampler Construction Materials 1-7
1.3 echnical Specifications for the 6712 Compact and Standard Samplers 1-8
1.4 Connector Specifications 1-14
2.1 Distributor Arm Positions and Discharge Tube Lengths for Bottle Kits 2-3
2.2 Discharge Tubes for Composite Sampling 2-8
2.3 Selecting the Right Strainer 2-10
2.4 Connecting Isco Instruments to the Sampler 2-14
3.1 About the Keypad 3-2
4.1. Reports: Program Events, Source Codes, and Error Codes 4-19
5.1 Serial Data Codes 5-27
8.1 6712 Telephone Commands 8-3

List of Examples

4.1. Program: One Sample Every 15 Minutes, One Sample in Each Bottle Using Standard Programming Style 4-2
4.2. Standard Program: Flow-Paced Sampling, Two Bottles Per Sample 4-3
4.3. Programming Example With a 730 Bubbler Module Attached 4-26
4.4. Programming Example With a 750 Area Velocity Module Attached 4-29
5.1. Selecting a Stored Extended Program 5-3
5.2. Storm Water Runoff Sampling 5-5

Chapter 1 Introduction

Chapter Contents

- *About This Manual*
- *About 700 Series Modules*
- *SDI-12 Sondes*
- *Memory to Store Data*
- *Pump Requirements*
- *Sampler Features*
- *Construction Materials*
- *Technical Specifications*
- *Connector Specifications*

The 6712 Series Samplers are an integral part of Isco's comprehensive sampling system. The system includes the 6712 Compact Sampler, the 6712 Standard Sampler and the 6712FR and 6712SR Refrigerated Samplers.

The 6712 portable samplers are easily moved from site to site. Constructed from durable, corrosion-resistant materials, the samplers withstand the hostile environments of industrial and municipal monitoring sites.

The 6712 Compact differs from the 6712 Standard Sampler only in size and sampling capacity. Both samplers use the same controller and sample-delivery system. Both instruments accept a variety of composite and sequential bottle kits.

ABOUT THIS MANUAL

This manual contains the information you will need to install, program, operate, and maintain a 6712 portable sampler. There are eight chapters and five appendices:

- *Chapter 1, Introduction* lists the features and specifications of the 6712 portable samplers.
- *Chapter 2, Installation/Preparation* steps you through installing the sampler and preparing it for use.
- *Chapter 3, Getting Started* describes features that are common to both standard and extended programming modes.
- *Chapter 4, Standard Programming* shows how to program your sampler using standard programming mode.
- *Chapter 5, Extended Programming* shows how to program your sampler using extended programming mode.
- *Chapter 6, SDI-12 Sondes* provides information on setting up sondes to work with the 6712.
- *Chapter 7, Maintenance* covers the basic maintenance required to keep your sampler in top operating condition.
- *Chapter 8, Software Options* explains specialized software features that can be enabled for use.

The appendices are:

- *Appendix A, Menu Flowcharts*
- *Appendix B, Material Safety Data Sheets*
- *Appendix C, General Safety Procedures*
- *Appendix D, Replacement Parts*
- *Appendix E, Accessories List*

Note

Because the 6712 Compact and Standard Samplers share many features, this manual includes programming, operation, and maintenance information for both instruments. Except where specifically noted, the contents of this manual apply to both units.

6712 Controller

ABOUT 700 SERIES MODULES

The bay on the controller's side accepts any of Isco's 700 Series Modules. The 700 Series includes:

- 701 pH Parameter Module for monitoring pH and temperature.
- 710 Ultrasonic Module for monitoring a flow stream's level and flow rate with an ultrasonic level sensor.
- 720 Submerged Probe Module for monitoring a flow stream's level and flow rate with a submerged probe.

- 730 Bubbler Flow Module for monitoring a flow stream's level and flow rate with a bubbler system.
- 750 Area-Velocity Module for monitoring a flow stream's level, velocity, and flow rate.
- 780 4-20mA Input Module for interfacing to non-Isco devices with 4 to 20 milliampere output signals.

The modules are optional accessories. The samplers do not require them for operation. However, the modules offer a number of advantages: they are an economical way to combine flow-rate or parameter monitoring with sampling, and you can program the samplers and modules as a single unit. Finally, the samplers store the readings in memory.

Need Assistance?

If you need help, have any questions, or think your sampler requires repair, contact Isco's Technical Service Department.

Isco Technical Service
Isco, Inc.
P.O. Box 82531
Lincoln, NE 68501

Telephone: (402) 464-0231
Toll free: (800) 228-4373
(USA, Canada, and Mexico)
FAX: (402) 465-3001
E-mail: service@isco.com

SDI-12 SONDES

As an option, the sampler accepts up to 16 parameters from up to ten sensors with SDI-12 addresses from 0 - 9 (refer to SDI-12 Sonde Readings, page 1-10, for specific parameters).

The data parameters used by the sensing device (sonde) and recording device (sampler) must match. Certain vendors' sondes have enhanced commands that facilitate "plug and play" setup. These Isco Ready sondes can tell the 6712 what values they have, their order, and units of measure. Other sondes can be used, but require manual setup to identify proper data types for each data value reported.

MEMORY TO STORE MONITORING DATA

The samplers contain enough memory to store five sampling programs, sampling data, Isco 700 Series Module readings, and SDI-12 parameter readings. You can view the readings on your sampler's display.

You can also retrieve the readings and reports so the information can be processed on a personal computer. Readings and reports may be collected with a computer running Isco's Flowlink™ software. Flowlink can download the information through a direct connection, a modem connection (when the sampler is equipped with the optional dial-out modem), or from a 581 Rapid Transfer Device (RTD). The RTD is a quick and simple way to transfer the data from the field to your computer. Reports are easily collected with Isco's Samplink software.

PUMP REQUIREMENTS

The sampler's peristaltic pump is extremely powerful. This pump requires a high capacity power source such as Isco's model 913 or 923 power pack. Older model power packs do not provide the needed power. A list of recommended power packs and batteries can be found in *Installing a Power Source* on page 2-9.

The pump also requires a pump tube made specifically for the 6712 and 6700 Series samplers. These pump tubes are easily recognized by their blue alignment collars. The 6712 pump tubing is the same as that for Isco's 6700 Series samplers, but different from Isco's earlier model samplers, such as the 3700 Series. **Other types of pump tubing will not work in the 6712.** Refer to *Replacing the Pump Tube* on page 7-7.

Table 1.1 6712 Standard and Compact Sampler Features

GENERAL FEATURES	
Top Cover	• Protects pump, power source, and controller. • Lockable latches.
Controller	• Contains a rechargeable desiccant to prevent moisture damage to the electronics, pump, and distributor systems. • Control panel sloped 15 degrees for easy reading. • Keys labeled with large, vivid icons. • 80-character display (4 lines by 20 columns). • Display has selectable backlight: Always on or always off. Timed, switching off when keypad is inactive for 60 seconds. • Memory for program and data storage. • Flash memory for easy software upgrades.
Center Section	• Secured to tub with lockable latches. • Large handles.
Adjustable Distributor Arm	• A single distributor arm adjusts quickly to fit all bottle kits. Easily removed for composite sampling.
Discharge Tube and Support Spring	• Routes sample liquid from pump tube, through distributor arm to sample bottle.
Composite Tube Guide for Composite Sampling	• Keeps discharge tube in place over composite bottles.
Tub	• Large, comfortable handles. • Both compact and standard samplers accept a variety of bottle kits. • **Compact Tubs Only**: Removable bottle-carrier insert. • **Standard Tubs Only**: Tub drain. • Optional five gallon bottle base: fits the standard sampler
Compatible Isco Products	• 581 Rapid Transfer Device • 674 Rain Gauge • 700 Series Modules • SDI-12 Sondes • Refrigerator Temperature Sensor • 1640 Liquid Level Actuator • 3200 Series Flow Meters • 4100 Series Flow Loggers • 4200 Series Flow Meters • Flowlink 4, Samplink
Real-Time Displays	As the sampler runs a sampling program, it displays the program's status. The status display may include such information as the time of the next sample, the number of the next bottle, or whether the sampler is disabled or stopped. If the sampler encounters an error while running the program, it displays a message alerting you to the problem.
Programming for Modules	Program the modules from the sampler's control panel. The module's program settings become part of the sampling program.
Setup for SDI-12 Sondes	Calibrate and program SDI-12 sondes from the sampler's control panel. The program settings become part of the sampling program. See Chapter 6.

Table 1.1 6712 Standard and Compact Sampler Features

GENERAL FEATURES (CONTINUED)	
Memory for Stored Programs and Readings	512 kilobytes of battery-backed RAM (Random Access Memory), to store: • Five sampling programs. • A sampling report from the most recently run program. It records as many as 1000 sampling events; events can be the program start time, enable time, sample event information, etc. • 700 Series module readings. The readings can be: level, flow rate, velocity, pH, temperature, or the data collected by the 4-20 mA module. • Rain gauge and refrigerator temperature readings. • SDI-12 sonde readings.
Five Reports Available	• The Program Settings report, listing current program settings. • The Sampling Results report, listing the events occurring during the program. • The Combined Results report, combining sampling events with readings from a rain gauge, module, or SDI -12 sonde. • The Module Summary report, summarizing flow rate or parameter readings. • The Rainfall Summary report, listing a summary of rainfall readings.
Serial Data Output	ASCII data output from the interrogator port.
Units of Measure	A variety of metric and English units of measure for length, flow rate, flow volume, and temperature.
External Sampler Enable	Isco flow meters and flow loggers have a programmable sampler enable feature that lets them send an electronic signal to a 6712 that enables (starts) or disables (stops) a running sampling program.
Dual Sampler Mode	Dual Sampler Mode operates two samplers.
Command Driven Operation	Operate sampler functions using RS-232 communications.
Warning Messages	• Pump Tube Warning. The 6712 displays a warning to inspect the tube. • Internal Battery Warning. The 6712 displays a warning when it is time to replace the internal battery. The internal battery preserves stored data when the 6712 is without external power.
Optional Dialout Modem	The 6712 controller can be ordered with a factory-installed 2400 baud dialout modem. With the modem you can: • connect to the sampler and download data using Flowlink software. • program the sampler to call a contact list when an "alarm" condition exists. • use the optional Phone Commands to control the sampler's operation from a remote location. See Chapter 8.
On-Line Help Notes	When programming the sampler, press the [?] (Help) key for a brief help note. All help topics appear in the index.
Two Programming Levels	Standard programming lets you set up typical sampling programs quickly. Extended programming includes all features available in standard programming plus additional features.

Table 1.1 6712 Standard and Compact Sampler Features

SAMPLE DELIVERY SYSTEM FEATURES	
Peristaltic Pump	• **Benefits**: Liquid moves continuously under pumped flow. The pump has no metering chambers or gravity fed internal tubing to trap sediment or residual liquid. Sample liquid contacts only the strainer, suction line, tube coupling, pump tube, bulkhead fitting, and sample bottles.
LD90 Liquid Detector	• **Nonwetted Detection**: Sample liquid never touches the detector.
Two Line Purges in Sampling Cycle	The sampling cycle always includes a presample purge and postsample purge that clears the suction line of residual liquid.
Easy Grab Samples	Simply disconnect the pump tube from the bulkhead fitting on the center section, and place the pump tube over your sample container.
Vinyl and Teflon® Suction Lines	• 3/8-inch ID (Inside Diameter) vinyl line. • 3/8-inch ID Teflon® lined with polyethylene jacket.
STANDARD PROGRAMMING FEATURES	
Pacing	• **Uniform Time Pacing**: Sampling at regular time intervals. • **Flow Pacing**: Sampling at regular flow-volume intervals.
Distribution Methods	• **Composite**: Samples deposited in a single large bottle. • **Sequential**: Only one sample placed in each bottle. • **Samples Per Bottle**: Multiple samples placed in each bottle. • **Bottles Per Sample**: One sample deposited in multiple bottles.
Three Flexible Start-Time Settings	• **Start Immediately**: Starts the sampling program immediately. • **Delayed Start**: Starts the sampling program after a user-definable delay of 1 to 999 minutes. • **Clock Time**: Starts the sampling program at a user-definable time on one or more days of the week.
Option for a Continuous Running Program	• **Continuous Sampling**: When sample bottles are regularly replaced, the sample distribution can restart with the first bottle set after the last bottle set is filled, without interrupting the running program.
EXTENDED PROGRAMMING FEATURES	
Pacing	• **Uniform Time Pacing**: Sampling at regular time intervals. • **Nonuniform Time Pacing**: Sampling at irregular time intervals. • **Random Interval Pacing**: Sampling at unique random time intervals generated by the controller. • **Flow Pacing**: Sampling at regular flow-volume intervals. • **Event Pacing**: Sampling each time a user-definable event occurs.
Flow Proportional Sample Volumes	Allows for samples to be taken based on flow. (This option is available only with uniform time pacing.)

Table 1.1 6712 Standard and Compact Sampler Features

EXTENDED PROGRAMMING FEATURES (CONTINUED)	
Distribution Methods	• **Composite**: Samples deposited in a single large bottle. • **Sequential**: Only one sample placed in each bottle. • **Samples Per Bottle**: Multiple samples placed in each bottle • **Bottles Per Sample**: One sample deposited in multiple bottles • **Multiple Bottle Compositing**: A combination of samples per bottle and bottles per sample distribution methods. • **Time Switched Bottles or Bottle sets**: Control the sample distribution using clock times.
Programmable Sampler Enable	A 6712 sampler can be programmed to enable or disable a running sampling program when readings received from a connected rain gauge, module, or SDI-12 Sonde meet certain conditions.
Pauses and Resumes	Create intermittent sampling schedules.
Two-Part Programming	Two-part programming lets you set up a sampling program that divides the bottles into two groups, filling each group according to separate pacing, distribution, sampler enable, and pause and resume settings. This is ideal for storm-water run-off sampling.
Auto Suction Head or Fixed Suction Head	The suction head, is the vertical distance from the flow stream to the liquid detector. Extended programming has two settings. • **Auto-Suction Head**: The head is automatically determined. • **Fixed Suction Head**: A user-definable measurement for the head.
Suction Line Rinses	Program setting for the number of times (0 to 3) that the 6712 rinses the suction line before drawing a sample.
Sampling Retries	Program setting for the number of times (0 to 3) that the 6712 attempts to sample if it fails to deliver the entire sample volume.
Three Flexible Start Time Settings	• **Run Immediately**: Starts the sampling program immediately. • **Delayed Start**: Starts the sampling program after a user-definable delay of 1 to 999 minutes. • **Clock Time**: Starts the sampling program at a user-definable time on one or more days of the week.
Option for a Continuous Running Program	**Continuous Sampling**: When sample bottles are regularly replaced, the sample distribution can restart with the first bottle set after the last bottle set is filled, without interrupting the running program.

Table 1.2 6712 Standard and Compact Sampler Construction Materials

ITEM	MATERIAL
Top Cover Center Section Tubs Bottle Inserts Plastic Retaining Rings Bottle Carriers	ABS (Acrylonitrile Butadiene Styrene) plastic
Bottle Rack	Powder coated steel
Controller Case Distributor Arm	Noryl®
Distributor Arm Nut Pump Rollers	Delrin®
Control Panel Connector Labels	Polyester
Distributor Shaft Pump Shaft Pump Paddles Pump Band Bulkhead Fitting Latches Handles Metal Retaining Rings	Stainless steel
Power-Source Draw Catches:	EPDM (Ethylene Propylene Diene Monomer) rubber
Amphenol Connectors	Cadmium Plated Aluminum
Retaining Ring Draw Cords (inside standard tub)	Polypropylene jacketed rubber with stainless steel clip
Retaining Ring Tie-Down (inside standard tub)	Iridited® aluminum
Drain Plug (standard tub only)	CPVC with polypropylene retaining strap
Webbing for Compact Bottle Carriers	Polypropylene.

Table 1.3 Technical Specifications for the 6712 Compact and Standard Samplers

6712 CONTROLLER, PUMP, AND TUBING: MECHANICAL SPECIFICATIONS	
Weight of Controller:	Controller only: 13.0 lbs (5.9 kg) With pump tube: 13.2 lbs (6.0 kg)
Weight of Nickel Cadmium Battery:	4.3 lbs (2.0 kg)
Weight of Lead Acid Battery:	5.7 lbs (2.6 kg)
Weight of Power Pack:	6.0 lbs (2.7 kg)
Weight of Battery Backed Power Pack:	6.6 lbs (3.0 kg)
Controller Dimensions:	Length: 10.3 in (26.0 cm) Width: 12.5 in (31.7 cm) Height: 10 in (25.4 cm)
Temperature Ranges:	Operational: 32°F to 120°F (0°C to 49°C) Storage: 0°F to 140°F (-18°C to 60°C)
Maximum Altitude:	2,000 Meters
Installation Category:	II
Pollution Degree:	2
Humidity:	95% RH Maximum
Enclosure:	NEMA 4X and 6 Pump: IP17 Enclosure: IP67
Typical Delivered Volume Accuracy:	(The ability to deliver the programmed sample volume.) ±10 ml or ±10% of programmed value, whichever is greater.
Typical Repeatability:	(The ability to repeat the delivered volume for a set of samples collected under the same conditions.) ±5 ml or ±5% of the average of the maximum and minimum sample volume in a sample set, whichever is greater, at lifts up to 25 feet.
Typical Pump Flow Rate and Line Transport Velocity:	Suction Head / Flow Rate / Line Transport Velocity 3 feet / 3.9 liters per minute / 3.0 ft/s (0.91 m/s) 5 feet / 3.9 liters per minute / 3.0 ft/s (0.90 m/s) 10 feet / 3.7 liters per minute / 2.9 ft/s (0.87 m/s) 15 feet / 3.6 liters per minute / 2.7 ft/s (0.83 m/s) 20 feet / 3.3 liters per minute / 2.5 ft/s (0.77 m/s) 23 feet / 3.1 liters per minute / 2.3 ft/s (0.71 m/s) 25 feet / 2.8 liters per minute / 2.2 ft/s (0.66 m/s)
Maximum Suction Head:	(The maximum suction head is the vertical height at which a sample can be taken.) 28 ft (8.5 m) at 30 inHg (762 mmHg)
Pump Tube Life:	Tube life may vary depending on the abrasiveness of the sample liquid. Recommended maximum 1,000,000 pump counts. This equates to 912 standard samples. A standard sample is 200 ml at 5 ft (1.5 m) suction head using a 10 ft (3 m) vinyl suction line.

Table 1.3 Technical Specifications for the 6712 Compact and Standard Samplers

6712 CONTROLLER: ELECTRICAL SPEFICATIONS	
Controller Internal Battery:	5 years minimum (maintains internal logic, program settings & stored data)
Real Time Clock Accuracy:	1 minute per month
Program Memory:	Nonvolatile programmable Flash. Can be field updated via interrogator connector.
Sampler Power Requirements:	Nominal: 12 volts DC by battery or AC power converter Operational: 11 to 13 Volts DC Absolute Maximum: 14.4 Volts DC
Power Pack Requirements: ⚠ Use only Isco-made power packs certified by UL. (P/N 60-1684-088)	120VAC ±12VAC, 60 Hz., 1.0 Amp. Note: This is the **only** version certified by UL. The line cord (mains connect cable is the "Disconnect Device."
Power Pack Requirements: ⚠ (Use only Isco-made CE certified power packs. (P/N 60-3004-190)	230VAC ±23VAC, 2.0 Amp, 50/60 Hz. Note: The line cord (mains connect cable is the "Disconnect Device."

Sampler Standby Current at 12 volts DC:

Sampler Only:	11 mA average
Sampler with pH Module:	26 mA average
Sampler with Ultrasonic Module:	35 mA average
Sampler with Submerged Probe Module:	27 mA average
Sampler with Bubbler Module:	49 mA average
Sampler with Area Velocity Module:	171 mA average
Sampler with 4-20 mA Module:	17 mA average

(This is without backlight. Add 220 ±20 mA when backlight is on.)

Sampler Only Operating Current:	Approximately 30 mA based on 200 ml sample every hour, 10 ft (3 m) suction line, and 5 ft (1.5 m) suction head.

Isco External Battery Capacity:

	Number of Complete Standard Sampling Routines	
	Nickel-Cadmium Battery	Lead-Acid Battery
Sampler Only:	7	9
Sampler with pH Module:	6	9
Sampler with Ultrasonic Module:	6	9
Sampler with Submerged Probe Module:	6	9
Sampler with Bubbler Module:	3	5
Sampler with Area Velocity Module:	5	6
Sampler with 4-20 mA Module:	6	9

A Standard Sampling Routine is a 200 ml sample taken every hour in 24 bottle mode, with a 10 foot (3 m) vinyl suction line at 5 feet (1.5 m) of head. The module is set to take a reading every 10 minutes.

Flow Meter Signal Requirement:	5 to 15 volt DC pulse or isolated contact closure of at least 25 millisecond duration. (4 - 20 mA or pulse duration signal may be converted with optional interface unit.)

6712 CONTROLLER: SOFTWARE SPECIFICATIONS	
Suction Line:	Programmable 3 to 99 ft (1 to 30 m) lengths of: • 3/8" (0.95 cm) I.D. Vinyl • 3/8" (0.95 cm) I.D. Teflon®-lined with polyethylene jacket
Sample Frequency:	• From 1 minute to 99 hours and 59 minutes in 1 minute increments between consecutive samples. • Nonuniform times in minute intervals or clock time • Random time intervals between consecutive samples • From 1 to 9,999 flow pulses in single-pulse intervals • Flow paced in volume with attachable flow module

Table 1.3 Technical Specifications for the 6712 Compact and Standard Samplers

6712 CONTROLLER: SOFTWARE SPECIFICATIONS (CONTINUED)

Rainfall Reading Units: Inches or millimeters

Module Readings:

pH	8 bits representing pH	0.1 pH storage resolution
	16 bits representing temp.	0.1° C storage resolution
Ultrasonic	16 bits representing level	0.0001 m storage resolution
Submerged Probe	16 bits representing level	0.0001 m storage resolution
Bubbler	16 bits representing level	0.0001 m storage resolution
Area Velocity	16 bits representing level	0.0001 m storage resolution
	16 bits representing velocity	0.001 ft/s storage resolution
4–20 mA	16 bits representing percent	0.1% storage resolution
	32 bits representing flow	

SDI-12 Sonde Readings:

Parameter	Range	Resolution	Storage Bytes
Temperature	-40 - 100 °C	0.1 °C	2
Conductivity	0 - 100 mS/cm	0.01 mS/cm	2
Specific Conductance	0 - 100 mS/cm	0.01 mS/cm	2
Total Dissolved Solids	0 - 90 g/l	0.01 g/l	2
Salinity	0 - 70 ppt	0.1 ppt	2
Dissolved Oxygen	0 - 20 mg/l	0.1 mg/l	1
pH	0 - 14	0.1	1
ORP	-999 - 999 mv	0.1 mv	2
Level	0 - 6.5279 m	0.0001 m	2
Ammonium-Nitrogen	0 - 200 mgN/l	0.1 mgN/l	2
Ammonia-Nitrogen	0 - 200 mgN/l	0.1 mgN/l	2
Nitrate-Nitrogen	0 - 200mgN/l	0.1 mgN/l	2
Turbidity	0 - 1000 NTU	0.1 NTU	2
Chloride	0 - 1000 mg/l	0.1 mg/l	2
Chlorophyll	0-400 ug/l	0.1 ug/l	2
Other	-99999.0-99999.0	0.0001	4

Module Reading Conversions:

- Level and 4–20 mA readings converted to flow rate units:
  - gallons per second
  - gallons per minute
  - million gallons per day
  - cubic feet per second
  - cubic meters per second
  - cubic meters per hour
  - cubic meters per day
  - liters per second
- Velocity units:
  - feet per second
  - meters per second
- Totalized flow units:
  - gallons
  - million gallons
  - cubic feet
  - cubic meters
  - liters
- Devices supported in flow conversion:
  - Weirs: V-notch; 22.5, 30, 45, 60, 90, and 120 degrees
    Rectangular; with and without end contractions
    Cipoletti.
  - Flumes: Parshall; 1", 2", 3", 6", 9", 1.5', 2', 3', 4', 5', 6', 8', 10', 12'
    Palmer-Bowlus; 4", 6", 8", 12", 15", 18", 21", 24", 27", 30", 48"
    Trapezoidal; LG 60 V, 2" 45 WSC, 12" 45 SRCRC
    H; 0.5', 0.75', 1', 1.5', 2', 2.5', 3', 4.5'
  - Manning Formula: Round, U-channel, Rectangular, Trapezoidal
  - Area Velocity: Round, U-channel, Rectangular, Trapezoidal
  - Data Points: 50 level-flow rate points, 50 level-area points

Refrigerator Temperature Sensor

Optional sensor and 5 ft (1.55 m) cable to record temperature readings.
Intended for use with fiberglass refrigerated (FR) samplers.
Range: -40.0 °C to 100 °C
Accuracy specification: ±0.3 °C over a range of 0.0 to 10.0 °C.
Reading data is 2 bytes, with a storage resolution of 0.1 °C.

Table 1.3 Technical Specifications for the 6712 Compact and Standard Samplers

6712 STANDARD PORTABLE SAMPLER: PHYSICAL SPECIFICATIONS		
Dimensions:	Height: 27 inches (68.6 cm) Diameter: 19.96 inches (50.7 cm)	
Sampler Tub Configurations:	• 24 wedge polypropylene bottles, 1,000 ml • 24 round glass bottles, 350 ml • 12 round polypropylene bottles, 1,000 ml • 12 round glass bottles, 950 ml • 8 round polyethylene bottles, 2.0 liters • 8 round glass bottles, 1.8 liters • 4 round polyethylene bottles, 3.7 liters (1 gal) • 4 round glass bottles, 3.7 liters (1 gal) • 1 round polyethylene bottle, 9.4 liters (2.5 gal) • 1 round glass bottle, 9.4 liters (2.5 gal)	
Dry Weight:	32 lbs (15 kg)	
This includes the top cover, center section, tub, controller, pump tube, distributor arm, distributor arm nut, and discharge tube for the 24 bottle configuration.		
Dry Weight With:	24 plastic bottles, hold down, no caps	36 lbs (17 kg)
	24 glass bottles, expander ring, no caps	55 lbs (25 kg)
	12 plastic bottles, insert, expander ring, no caps	37 lbs (17 kg)
	12 glass bottles, insert, expander ring, no caps	45 lbs (21 kg)
	8 plastic bottles, insert, hold down, no caps	36 lbs (17 kg)
	8 glass bottles, insert, hold down, no caps	46 lbs (21 kg)
	4 plastic bottles, insert, hold down, no caps	36 lbs (17 kg)
	4 glass bottles, insert, hold down, no caps	45 lbs (21 kg)
	1 plastic bottle and composite tube guide, no cap, arm or nut	34 lbs (16 kg)
	1 glass bottle and composite tube guide, no cap, arm or nut	38 lbs (18 kg)
Filled Bottle Weight:	24 plastic bottles	101 lbs(46 kg)
	24 glass bottles	104 lbs(48 kg)
	12 plastic bottles	89 lbs (41 kg)
	12 glass bottles	95 lbs (43 kg)
	8 plastic bottles	84 lbs (38 kg)
	8 glass bottles	90 lbs (41 kg)
	4 plastic bottles	98 lbs (45 kg)
	4 glass bottles	104 lbs(48 kg)
	1 plastic bottle	90 lbs (41 kg)
	1 glass bottle	94 lbs (43 kg)
This includes everything in the Dry Weight, Dry Weight With, and Ice Capacity specifications, and the bottles are filled to the capacities listed in Sampler Tub Configurations. This weight does not include a power source.		
Ice Capacity:	24 plastic bottles	12 lbs (5.4 kg)
	24 glass bottles	30 lbs (13.6 kg)
	12 plastic bottles	16 lbs (7.3 kg)
	12 glass bottles	16 lbs (7.3 kg)
	8 plastic bottles	12 lbs (5.4 kg)
	8 glass bottles	12 lbs (5.4 kg)
	4 plastic bottles	28 lbs (12.7 kg)
	4 glass bottles	25 lbs (11.3 kg)
	1 plastic bottle	35 lbs (15.9 kg)
	1 glass bottle	35 lbs (15.9 kg)
$^3/_4$" × $^3/_4$" × $^1/_4$" approximate ice cube size. Ice capacity will vary with the size of the cubes.		

Table 1.3 Technical Specifications for the 6712 Compact and Standard Samplers

6712 STANDARD PORTABLE SAMPLER: PHYSICAL SPECIFICATIONS (CONTINUED)

Cooling Capacity:

Configuration:	Sample Size	Cooling Water	Last Sample	Last Sample Temp
24 plastic bottles	500 ml Sample	61°F (16°C)	Sample 24	63°F (17°C)
24 glass bottles	175 ml Sample	39°F (4°C)	Sample 24	41°F (5°C)
12 plastic bottles	500 ml Sample	36°F (2°C)	Sample 12	54°F (12°C)
12 glass bottles	475 ml Sample	36°F (2°C)	Sample 12	54°F (12°C)
8 plastic bottles	1,000 ml Sample	50°F (10°C)	Sample 8	57°F (14°C)
8 glass bottles	900 ml Sample	37°F (3°C)	Sample 8	54°F (12°C)
4 plastic bottles	1,850 ml Sample	34°F (1°C)	Sample 4	34°F (1°C)
4 glass bottles	1,850 ml Sample	37°F (3°C)	Sample 4	37°F (3°C)
1 plastic bottle	12–400 ml Samples	37°F (3°C)	Composite Sample	37°F (3°C)
1 glass bottle	12–400 ml Samples	36°F (2°C)	Composite Sample	36°F (2°C)

The cooling capacity is the temperature of the sample and the cooling water 24 hours after the last sample is taken. The amount of ice specified for the ice capacity was used. The temperature of the sample liquid is 65°F (18°C). The ambient temperature is 75°F (24°C).

Average Thermal Resistance Factor: R-10

The average R-value for a complete sampler. This includes a tub, center section, top cover, controller, pump tube, distributor arm, and discharge tube.

6712 STANDARD SAMPLER WITH OPTIONAL 5 GALLON BOTTLE BASE: PHYSICAL SPECIFICATIONS

Dimensions

Base Alone: Height: 15.4 inches (39.1 cm) Diameter: 19.9 inches (50.6 cm)

Assembled Sampler: Height: 31.5 inches (80.0 cm) Diameter: 19.9 inches (50.6 cm)

Sampler Tub Configuration: 1 round glass bottle, 5 gallons (18.9 liters)

Dry Weight: 52 lbs (24 kg)

This includes the top cover, center section, bottle base, 5 gallon glass bottle, controller, pump tube, and discharge tube.

Ice Capacity: 21 lbs (9.5 kg)

$^3/_4$" × $^3/_4$" × $^1/_4$" approximate ice cube size. Ice capacity will vary with the size of the cubes.

Filled Bottle Weight: 115 lbs (52 kg)

This includes everything in the Dry Weight and the Ice Capacity specifications, and the bottle is filled to the capacities listed in Sampler Tub Configurations. This weight does not include a power source.

Cooling Capacity:	Sample Size	Cooling Water	Composite Sample Temperature
	12–800 ml Samples	36°F (2°C)	36°F (2°C)

The cooling capacity is the temperature of the sample and the cooling water 24 hours after the last sample is taken. The amount of ice used is specified in "ice capacity." The sampler is set up to take one sample every hour for twelve hours filling the bottle half full. The temperature of the incoming sample liquid is 65°F (18°C). The ambient temperature is 75°F (24°C).

Average Thermal Resistance Factor: R-10

This is the average R-value for the complete sampler. This includes a bottle base, center section, top cover, controller, pump tube, discharge tube, and composite tube guide.

Table 1.3 Technical Specifications for the 6712 Compact and Standard Samplers

6712 COMPACT PORTABLE SAMPLER: PHYSICAL SPECIFICATIONS

Dimensions:	Height: 27.6 inches (70.1 cm) Diameter: 17.75 inches (45.1 cm)
Sampler Tub Configurations:	• 24 wedge polyethylene bottles, 500 ml • 12 round polyethylene bottles, 500 ml • 12 round glass bottles, 375 ml • 1 round polyethylene bottle, 9.4 liters (2.5 gallon) • 1 round glass bottle, 9.4 liters (2.5 gallon)
Dry Weight:	31 lbs (14 kg)

This includes the top cover, center section, tub, controller, pump tube, distributor arm, distributor arm nut, and discharge tube for the 24 bottle configuration.

Dry Weight With:	24 plastic bottles, insert, hold down, no caps	35 lbs (16 kg)
	12 plastic bottles, insert, expander ring, no caps	35 lbs (16 kg)
	12 glass bottles, insert, expander ring, no caps	43 lbs (20 kg)
	1 plastic bottle and composite tube guide, no cap, arm or nut	33 lbs (15 kg)
	1 glass bottle and composite tube guide, no cap, arm or nut	37 lbs (17 kg)

Filled Bottle Weight:	24 plastic bottles	70 lbs (32 kg)
	12 plastic bottles	62 lbs (28 kg)
	12 glass bottles	66 lbs (30 kg)
	1 plastic bottle	66 lbs (30 kg)
	1 glass bottle	73 lbs (33 kg)

This includes everything in the Dry Weight, Dry Weight With, and Ice Capacity specifications, and the bottles are filled to the capacities listed in Sampler Tub Configurations. This weight does not include a power source.

Ice Capacity:	24 plastic bottles	8 lbs (3.6 kg)
	12 plastic bottles	13 lbs (5.9 kg)
	12 glass bottles	13 lbs (5.9 kg)
	1 plastic bottle	12 lbs (5.4 kg)
	1 glass bottle	15 lbs (6.8 kg)

3/4" x 3/4" x 1/4" approximate ice cube size. Ice capacity may vary with the size of the cubes.

Cooling Capacity:

Configuration:	Sample Size	Cooling Water	Last Sample	Last Sample Temp
24 plastic bottles	250 ml Sample	41°F (5°C)	Sample 24	55°F (13°C)
12 plastic bottles	250 ml Sample	34°F (1°C)	Sample 12	41°F (5°C)
12 glass bottles	175 ml Sample	34°F (1°C)	Sample 12	43°F (6°C)
1 plastic bottle	12–400 ml Samples	43°F (6°C)	Composite Sample	43°F (6°C)
1 glass bottle	12–400 ml Samples	39°F (4°C)	Composite Sample	39°F (4°C)

The cooling capacity is the temperature of the sample and the cooling water 24 hour after the last sample is taken. The amount of ice specified for the ice capacity was used. The temperature of the sample liquid is 65°F (18°C). The ambient temperature is 75°F (24°C).

Average Thermal Resistance Factor:	R-11

The average R-value for a complete sampler. This includes a tub, center section, top cover, controller, pump tube, distributor arm, and discharge tube.

General Notes:

1. All weights may vary ±1 lb (±1/2 kg).
2. All dimensions may vary ±1/4 inch (±0.64 cm).
3. Sample delivery specifications valid for the following conditions and ranges, unless otherwise stated: 75°F (24°C) ambient, sample liquid–tap water at 50 to 80°F (10 to 27°C), sample volumes from 50 ml to 1000 ml, suction line lengths of 25 ft (7.6 m) or less, suction heads from 1 to 20 ft (0.3 to 6.1 m), atmospheric pressure between 29.92 and 31.89 inHg (760 and 810 mmHg), and a power source of an Isco High Capacity Power Pack at 12.5 volts DC no load output.

Table 1.4 Connector Specifications

CONNECTOR ICON	PIN-LOCATION DIAGRAM	PIN FUNCTION
POWER SOURCE	2-PIN MALE, SEALED	A Ground B +12 volts DC
RAIN GAUGE	9-PIN FEMALE, SEALED	A +12 volts DC B Ground C Programmable I/O1 pin D Rain gauge input E Not Connected F SDI-12 Data G Not Connected H Programmable I/O2 pin I Programmable I/O3 pin
INTERROGATOR	6-PIN FEMALE, SEALED	A Switched +12 volts DC B Ground C Connection Sense D Transmit E Receive F NC
FLOW METER	6-PIN MALE, SEALED	A +12 volts DC B Ground C Flow Pulses In D Bottle Number Out Dual Sampler Out E Event Mark Out F Inhibit In
MODULE (IN MODULE BAY)	8-PIN MALE, SEALED	1 NC 2 +12 volts DC 3 Ground 4 Module Sense 5 Receive 6 Transmit 7 Clock 8 Control

Chapter 2 Installation/Preparation

Chapter Contents

- *Checklist*
- *Preparing the Sampler*
- *Installing Bottle Kits*
- *Installing a Power Source*
- *Suction Line*
- *Strainers*
- *How Does the Sampler Work?*
- *Installing the Sampler*
- *Connecting External Instruments*
- *Locking the Sampler.*
- *Servicing the Sampler*
- *Recovering the Sampler*
- *Collecting Sample Bottles*

CAUTION

Tests indicate that the pump produces sound levels in excess of 85db at one meter. Prolonged exposure to this sound could result in hearing loss and requires the use of protective ear plugs.

CHECKLIST

1. Prepare the sampler.
   a. Adjust the distributor arm to fit the bottle kit. Then install the distributor arm and discharge tube. For Composite bottle kits, install the composite tube guide and thread the discharge tube through the guide.
   b. Install the bottle kit.
   c. Install the power source.
   d. Check the pump tube. Replace it if necessary and reset the pump tube warning.
   e. Attach the suction line to the pump tube.
   f. Attach a strainer to the suction line if necessary.
2. Install the sampler at the monitoring site.
   a. Install a module, if desired. Refer to the module manual for instructions for installing the module.
   b. Ice the tub, if desired.
   c. Install the strainer or end of the suction line in the flow stream and route the suction line to the sampler.
   d. Place the sampler in position.
   e. Connect any necessary external instruments to the sampler.
3. Program the sampler. Programming guidelines are in both this manual and in the module manual.
4. Run the sampling program.
5. Service the sampler.
   a. Recover the sampler.
   b. Collect the sample bottles.
   c. Replace the battery if required.
   d. Collect the sampling data.
   e. Replace the sample bottles.
   f. Run the sampling program.

⚠ WARNING

When using the 6712 sampler with a 750 or 710 module, transmitters such as cell phones or walkie talkies must not be operated within 3 meters of the sampler. If water level readings are fluctuating due to TV/radio station transmitter towers in the area, the sampler must be relocated.

PREPARING THE SAMPLER

Installing the Distributor Arm and Discharge Tube

When sampling with multiple bottles, both the compact and standard 6712 Samplers use a distributor arm. It is adjustable so that you can position the discharge tube over the bottles of each kit. Each bottle kit also uses a discharge tube of a specific length. Table 2.1 lists the correct discharge tube lengths for each bottle kit. After installing the distributor arm and discharge tube, run the distributor to each bottle position to ensure proper installation.

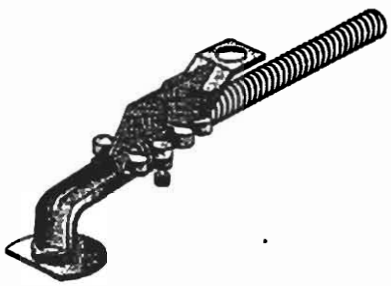

Distributor Arm

If using bulk tubing to cut your own tubes, cut the ends of the tube square, not at an angle, and cut the length accurately.

The two-piece distributor arm has four positions, marked on the underside with the letters A, B, C, and D. Adjust the arm to the correct position for the bottle kit being used. Table 2.1 shows the correct position for each kit. Thread the discharge tube through the spring and arm so that the tube protrudes from the arm 1/16 to 1/8 inch. If too much tube protrudes from the arm it can catch on bottles and jam the distributor arm.

Attach the arm to the distributor shaft. Secure the arm with the black plastic nut. Slide the free end of the discharge tube onto the bulkhead fitting.

Figure 2.1 Installing the Distributor Arm

Step 1

The two-piece arm has four positions, marked on the underside with the letters A, B, C, and D. Adjust the arm to the correct position for the bottle kit. Table 2.1 shows you the correct position for each kit.

Thread the discharge through the spring and arm so that the tube protrudes from the arm 1/16 to 1/8 inch.

Step 2

Attach the arm to the distributor shaft. The arm and shaft are keyed so that you can align them correctly. Secure the arm to the shaft with the black plastic nut.

Step 3

Slide the end of the discharge tube onto the bulkhead fitting.

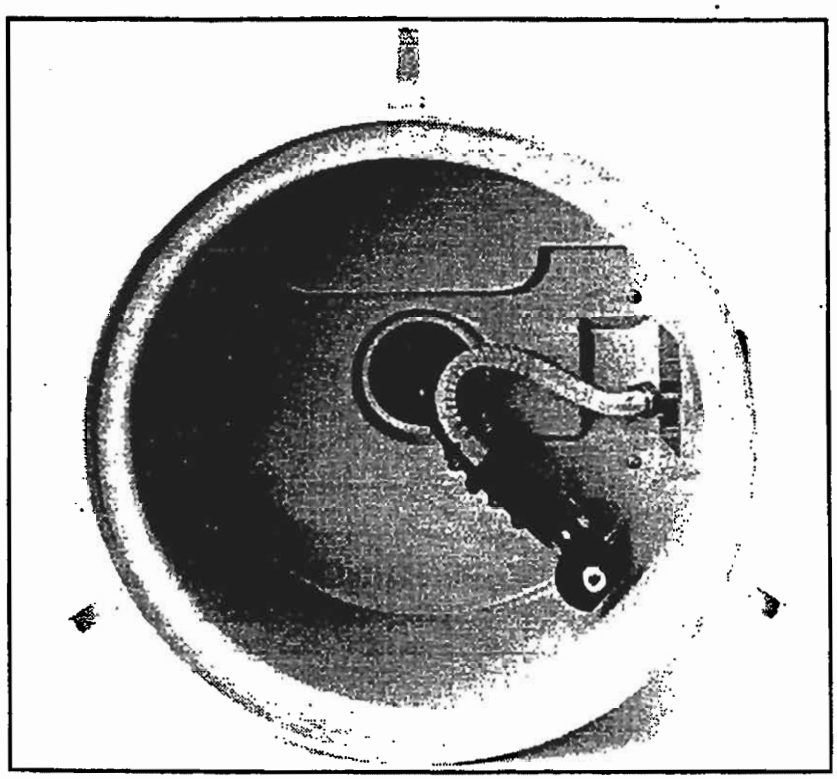

Table 2.1 Distributor Arm Positions and Discharge Tube Lengths for Bottle Kits

Compact 24-Bottle Kit

- 500-milliliter polyethylene bottle

Distributor Arm Position: B
Discharge Tube: 60-9003-257
Discharge Tube Length: 14¼ inches (36.2 cm)

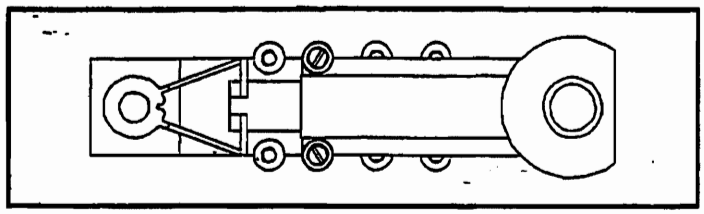

Compact 12-Bottle Kit

- 375-milliliter glass bottles
- 500-milliliter polyethylene bottles

Distributor Arm Position: B
Discharge Tube: 60-9003-257
Discharge Tube Length: 14¼ inches (36.2 cm)

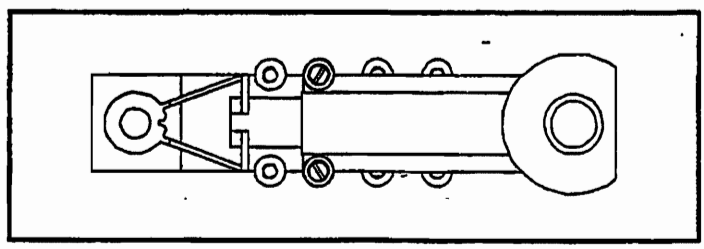

Standard 24-Bottle Kits

- 350-milliliter glass bottles
- 1,000-milliliter polypropylene bottles

Distributor Arm Position: D
Discharge Tube: 60-9003-260
Discharge Tube Length: 17¼ inches (43.8 cm)

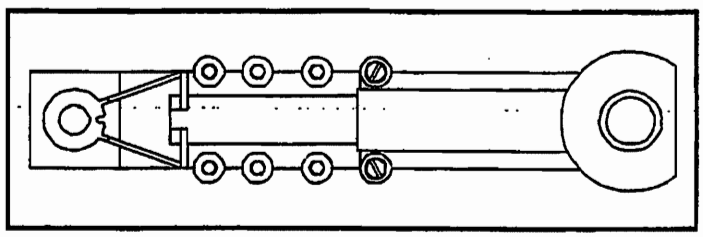

Standard 12-Bottle Kits

- 950-milliliter glass bottles
- 1,000-milliliter polypropylene bottles

Distributor Arm Position: C
Discharge Tube: 60-9003-262
Discharge Tube Length: 16½ inches (41.9 cm)

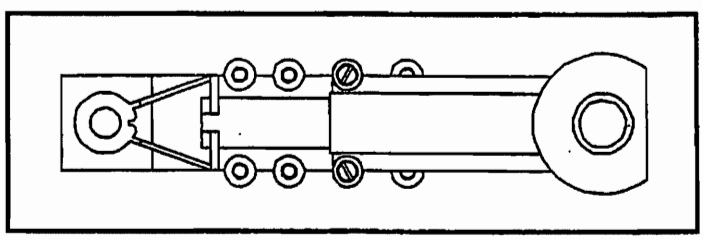

Standard 8-Bottle Kits

- 1.8-liter glass bottles
- 2.0-liter polyethylene bottles

Distributor Arm Position: B
Discharge Tube: 60-9003-264
Discharge Tube Length: 15¾ inches (40.0 cm)

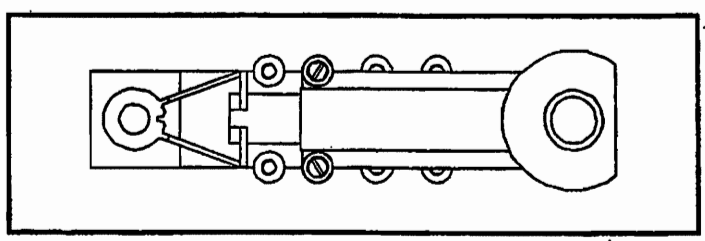

Standard 4-Bottle Kits

- 3.7-liter (1-gallon) glass bottles
- 3.7-liter (1-gallon) polyethylene bottles

Distributor Arm Position: A
Discharge Tube: 60-9003-266
Discharge Tube Length: 15 inches (38.1 cm)

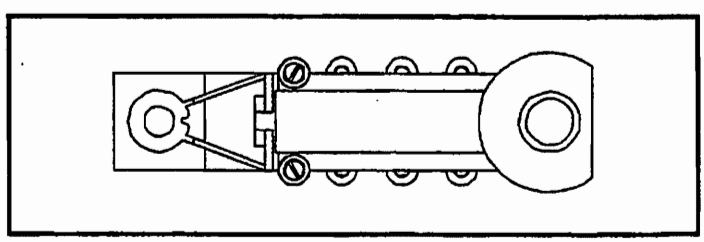

INSTALLING BOTTLE KITS

The samplers are shipped from the factory with sample bottles in place. When using the sampler for the first time, you will only need to remove the bottle lids. When installing cleaned bottles or a new kit, keep these guidelines in mind:

- Do not mix glass and plastic bottles together.
- Install all bottles to insure that they remain in place.
- Align the bottles correctly. If the bottles are misaligned, the sampler may miss the bottle mouth, or the sampler will deposit samples in the "wrong" bottle.
- Each time you change from one size bottle to another, you must adjust the length of the distributor arm and install a discharge tube of the correct length.
- Each time you install a bottle kit, check the program settings for the number of bottles and bottle volume.

You must adjust the distributor arm and use a different discharge tube for each bottle kit. See *Installing Distributor Arm* and Table 2.1 for more information.

Aligning Bottle Kits in the Standard Tub

Figures 2.2 through 2.5 show each kit being installed in the standard tub. Refer to Table 2.1 to adjust the distributor arm to the correct length and use the correct length of discharge tube.

Figure 2.2 Placing the 24-bottle kit in a standard tub

1. Install the bottles then secure the plastic retaining ring with the three draw cords. (For glass bottles use the stainless steel retaining ring).
2. Adjust the distributor arm to the correct position, insert the discharge tube, and attach the distributor arm.

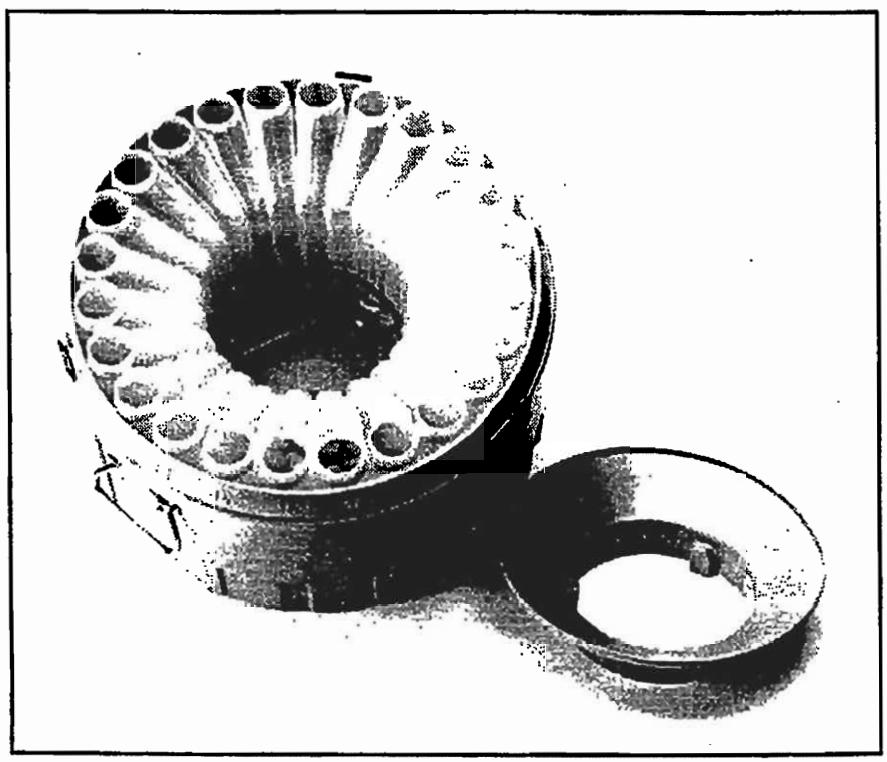

Figure 2.3 Placing the 12-bottle kit in a standard tub

1. Slide the 12-bottle insert into the tub, aligning the label with the corresponding numbers on the outside of the tub.
2. Place the bottles in the insert. Secure the bottles against the wall with the stainless steel retaining ring.
3. Adjust the distributor arm to the correct position, insert the discharge tube, and attach the distributor arm.

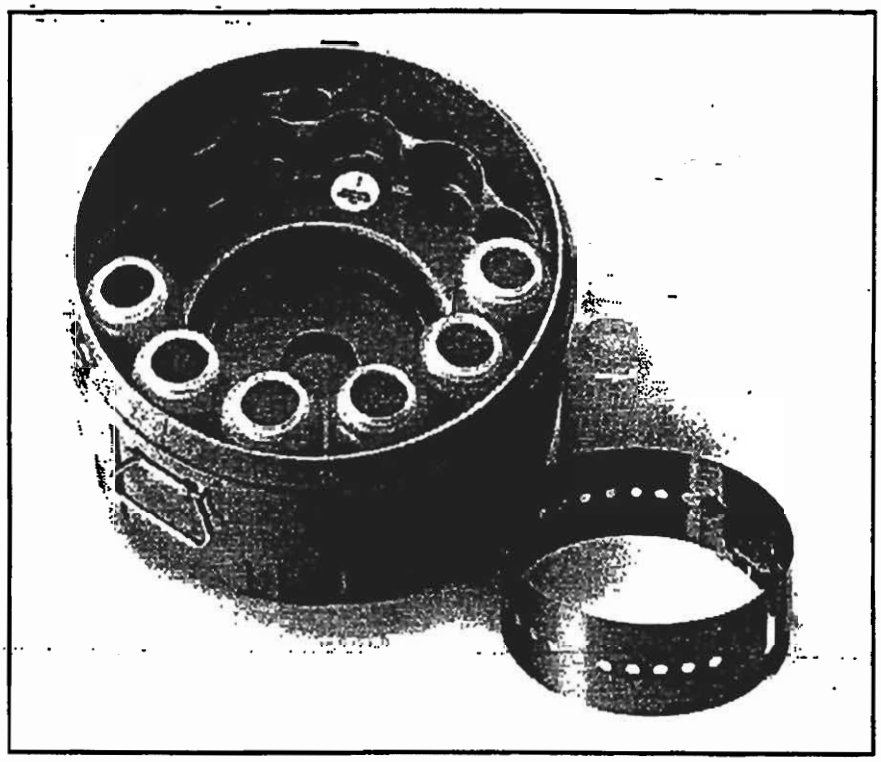

Figure 2.4 Placing the 8-bottle kit in a standard tub

1. Position the 8-bottle insert in the tub, aligning the label with the corresponding numbers on the outside of the tub.
2. Place the bottles in the insert then secure the plastic bottle insert with the three draw cords.
3. Adjust the distributor arm to the correct position, insert the discharge tube, and attach the distributor arm.

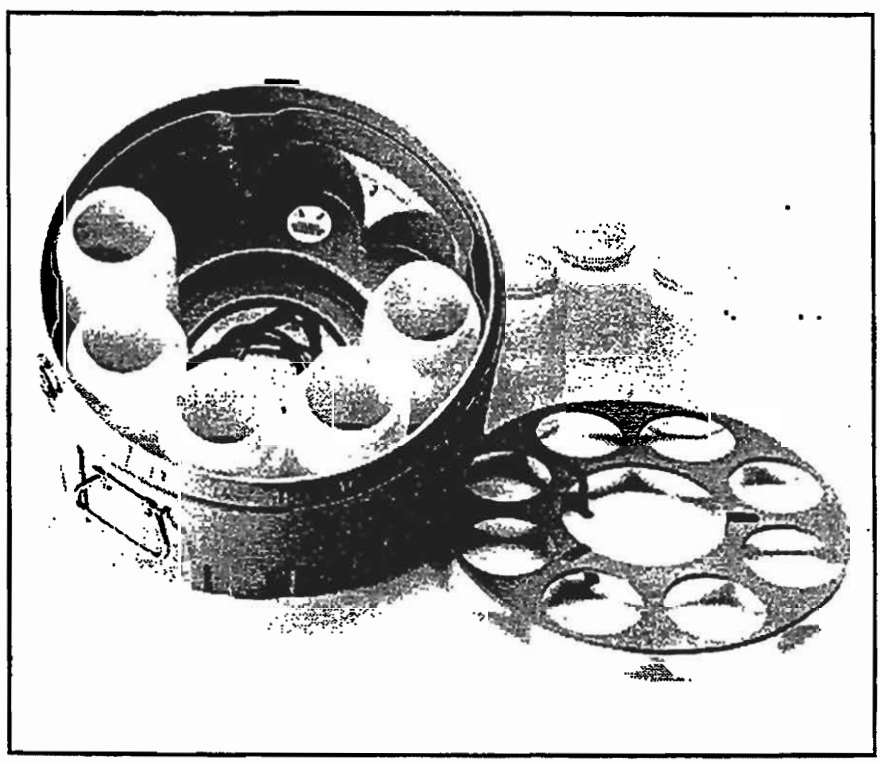

Figure 2.5 Placing the 4-bottle kit in a standard tub

1. Place the rack in the tub, aligning the label with the corresponding numbers molded on the outside of the tub.
2. Place bottles in the rack and secure the hold down over the bottles with the three draw cords.
3. Adjust the distributor arm to the correct position, insert the discharge tube, and attach the distributor arm.

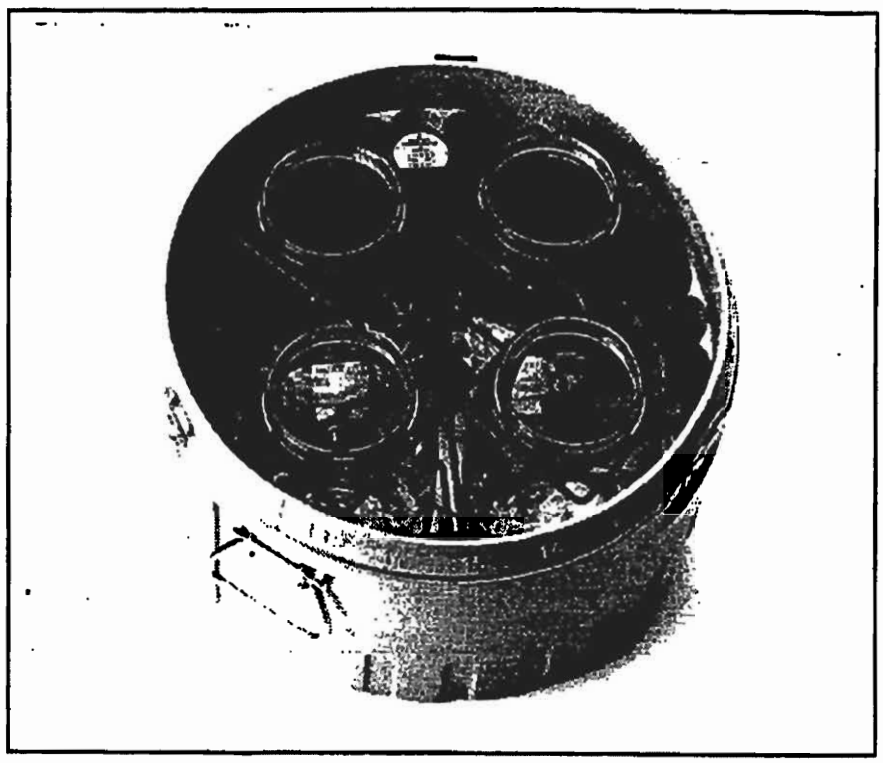

Figure 2.6 Placing the carrier in the compact tub

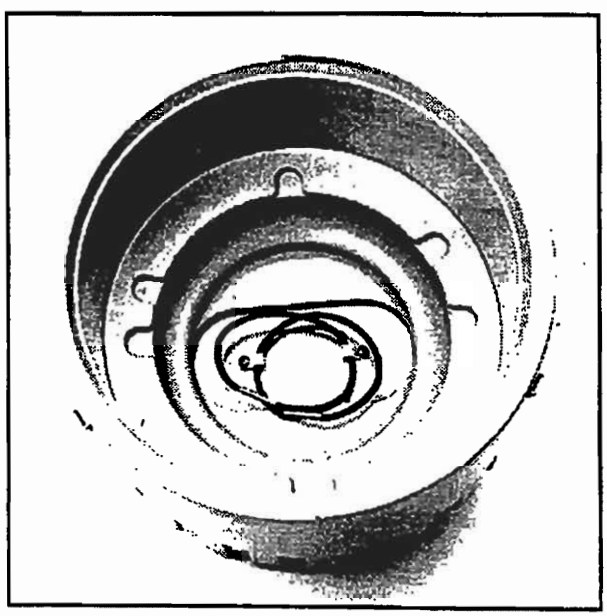

Compact Sampler Tub
Alignment Notches

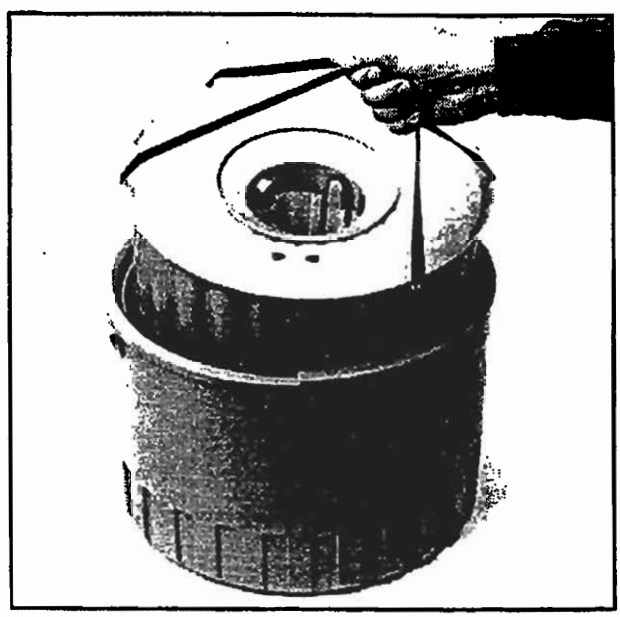

Aligning the carrier

Aligning Bottle Kits in the Compact Tub

To align the bottles:

1. Place the bottles in the carrier, and secure them with the appropriate retaining ring.
2. Place the carrier in the tub, aligning it as shown in Figure 2.6. The carrier will drop into the notches when properly aligned.

COMPOSITE BOTTLE KITS

You can install a single 2½ gallon bottle in either the standard or compact sampler tub for composite sampling. Single bottle sampling uses a composite tube guide instead of a distributor arm to position the discharge tube over the bottle. Install the composite tube guide and discharge tube as shown in Figure 2.7. Discharge tube part numbers and lengths are listed in Table 2.2.

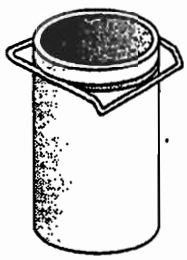

Composite Tube Guide

The compact and standard sampler bottle bases accept a 2½ gallon glass or plastic bottle. Place the bottle in the recess formed in the bottle base.

Optional Five Gallon Bottle Base

You can install an optional bottle base on the standard sampler to collect larger composite volumes. The optional base replaces the standard tub and holds a five gallon glass bottle or 5.5 gallon polypropylene bottle. Prepare the sampler as shown in Table 2.2 and Figure 2.7, and place the bottle in the recess formed in the bottle base.

Figure 2.7 Installing the composite tube guide

Step 1

Both the compact and standard samplers use the same composite tube guide to hold the discharge tube in place over the composite bottle.

Attach the composite tube guide by firmly sliding it onto the distributor-shaft housing. It will snap in place. The guide has a slot that fits over a key on the housing to align it.

Step 2

Thread the discharge tube through the guide as shown. Attach the tube to the bulkhead fitting.

Removal

To remove the composite tube guide, rotate the metal clip to one side while pulling the guide away from the center section.

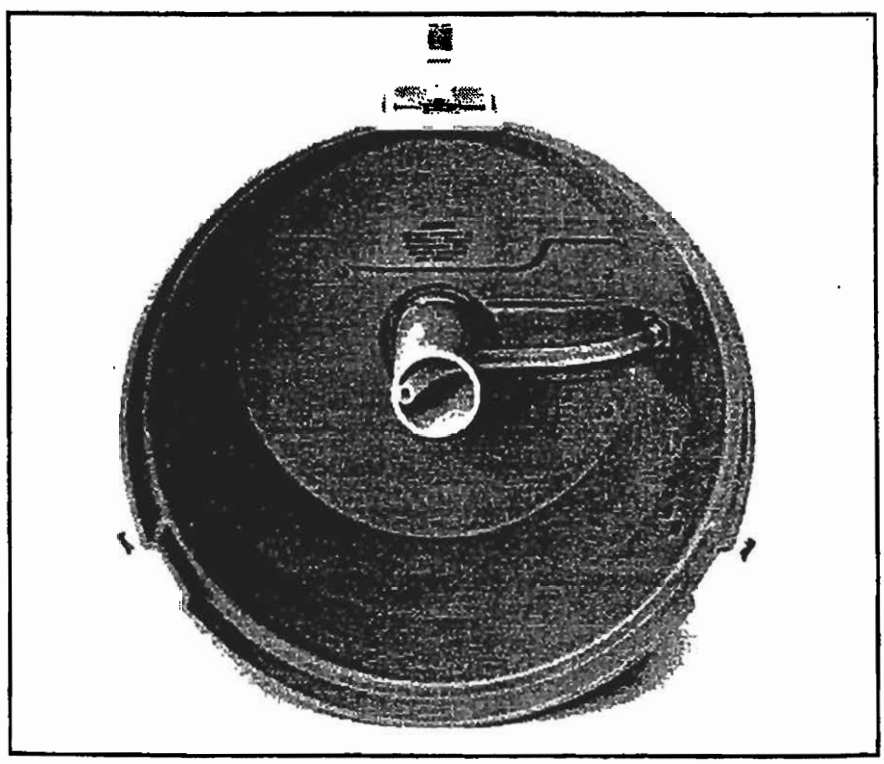

Table 2.2 Discharge Tubes for Composite Sampling

Configuration	Discharge Tube	Discharge Tube Length
Compact 1 Bottle •9.4-liter (2½ gallon) glass bottle •9.4-liter (2½ gallon) polyethylene bottle	60-9003-258	10 inches (25.4 cm)
Standard 1 Bottle •9.4-liter (2½ gallon) glass bottle •9.4-liter (2½ gallon) polyethylene bottle	60-9003-271	12 inches (30.5 cm)
5 Gallon Bottle Option •18.9-liter (5-gallon) glass bottle •5.5 gallon polypropylene bottle *Standard samplers only. Requires the Five Gallon Bottle Base.*	60-9003-271	12 inches (30.5 cm)

Figure 2.8 Composite Bottles

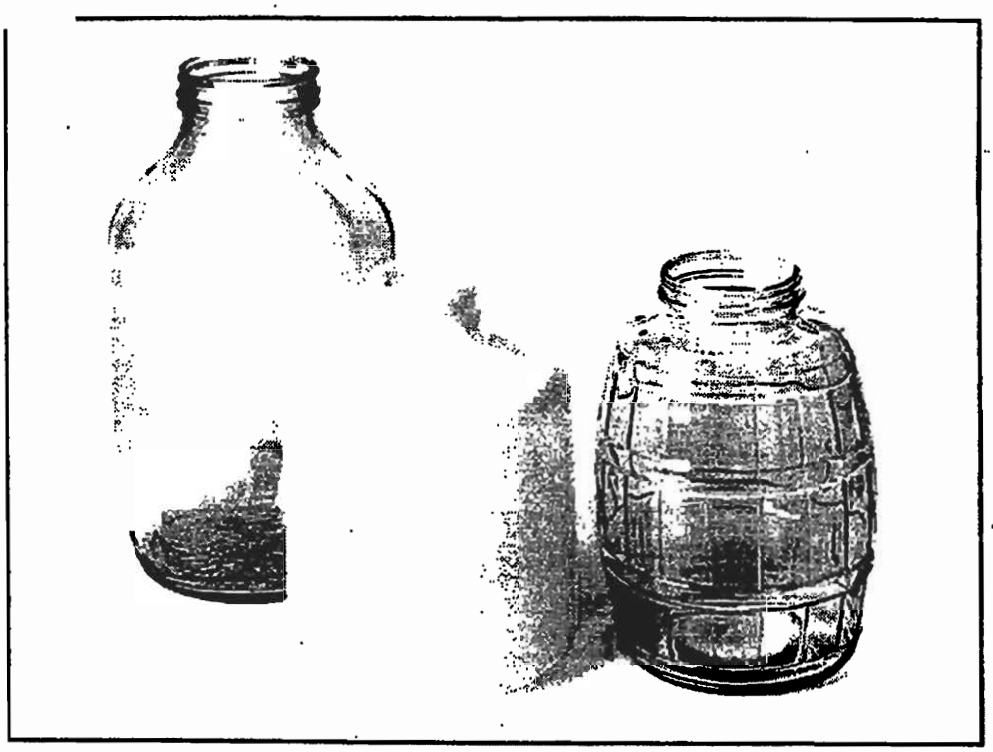

5 Gallon Glass Composite Bottle | **2.5 Gallon Plastic Composite Bottle** | **2.5 Gallon Glass Composite Bottle**

INSTALLING A POWER SOURCE

CAUTION

Use only Isco-made power packs. If using a power pack with the 6712, Isco recommends you use the new 913 or 923 power pack. Older model power packs may not provide sufficient power.

Refer to the *Isco Power Products Guide* shipped with your sampler for more information on Isco's power sources.

If you use a 120 or 240 volt AC-connected power pack, the AC line cord is the "Disconnect Device." Always install the sampler with the line cord and plug visible and readily accessible, so that power can be disconnected easily.

The 6712 Sampler requires 12-volt DC power. Power sources available from Isco are listed below.

- 946 Lead Acid Battery
- 934 Nickel Cadmium Battery
- 913 High Capacity Power Pack (120 volts AC, 50/60 Hz)
- 923 High Capacity Power Pack (240 volts AC, 50/60 Hz)
- 914 Battery Backed Power Pack (120 volts AC, 50/60 Hz)
- 924 Battery Backed Power Pack (240 volts AC, 50/60 Hz)
  (the 924 is not certified for use in Europe)
- 948 45 Amp Hr Battery

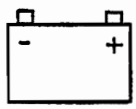

Power Source Connector Icon

Connect the power source to the sampler connector that is labeled with this icon.

To install the smaller batteries or power packs on the sampler:

1. Place the power source in the sampler's battery recess.
2. Secure the power source with the black rubber draw-catches.
3. Attach the power-source cable to the power-source connector on the controller.

Connecting an External 12-Volt DC Source

You can also power the sampler with an external 12-volt DC source, such as an automotive battery. Connect the sampler to the battery with the External 12-Volt DC Power Cable.

Be sure to attach the positive and negative clips to the correct battery terminals. If polarity is reversed, the sampler may be permanently damaged.

About Suction Lines

- The vinyl line contains a very low parts-per-million level of phenols. If phenol content affects your sample analysis, use the Teflon suction line.
- Occasionally, your sampling application may suggest a nonstandard line. For best sampling results, however, use the standard suction line available from Isco.
- When installing the sampler, be sure the vertical distance between the liquid level and the pump is as small as possible.

SUCTION LINE

The suction line is the tubing from the sampling point to the pump intake. The 6712 uses a 3/8-inch ID suction line of lengths 3 to 99 feet. Isco offers vinyl or Teflon® suction lines. The Teflon® tubing has a polyethylene jacket to protect it from kinks and abrasions.

Guidelines for Measuring and Cutting the Suction Line

- Cut the line to the desired length but use the shortest length feasible for the installation.
- Cut the line in 1 foot increments. For instance, 4 feet, not 3 1/2. If using metric units of measure, cut the line in increments of 0.1 meter. Do not include the length of the strainer in the measurement.

Attaching Suction Line Tube Coupling

Attaching Suction Line to Pump Tube

Attach the vinyl suction line to the pump tube with the tube coupling. Use the black clamp for the pump tube and the white clamp for the suction line. Attach the line and tube to the coupling by pushing them onto each end of the coupling. Then tighten the clamps by squeezing the finger pads together. Loosen a clamp by twisting it until its teeth disengage. Attach the Teflon® suction line to the pump tube by inserting the line into the tube and secure with a suitable clamp.

STRAINERS

Isco offers four strainers that help prevent solids from clogging the suction line:

- Stainless steel strainer for priority pollutant sampling
- Polypropylene strainer for routine sampling conditions
- CPVC strainer for acidic liquid sources
- Stainless steel low-flow strainer

To select the right strainer for your application, see Table 2.3.

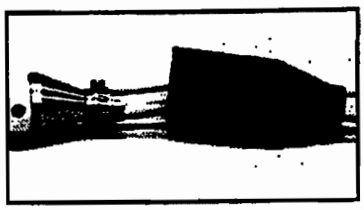

Attaching the Debris Deflector

Debris Deflector

A debris deflector prevents debris from accumulating on the hose clamp that attaches the strainer to the suction line.

Alternative to Strainers

When sampling from high velocity streams with heavy suspended solids, some field investigations suggest that more representative samples are obtained without the strainer. Consider attaching a short piece of thin walled aluminum tubing to the end of the suction line; anchor the tubing so that the inlet opens upstream. The aluminum tubing's thin wall will not disturb the flow stream, and most sample analyses disregard aluminum ions. Under most conditions, the presample purge removes any debris over the tubing entrance.

Table 2.3 Selecting the Right Strainer

STRAINER	DIMENSIONS	APPLICATION	MAXIMUM DEPTH
Stainless Steel	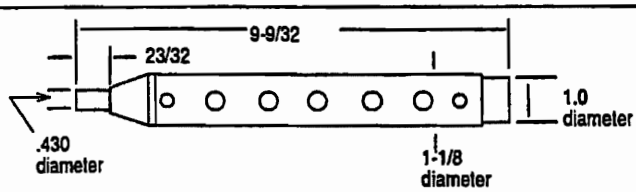	Priority-pollutant sampling.	Vinyl Line: 22 feet. Teflon Line: 15 feet.
Polypropylene	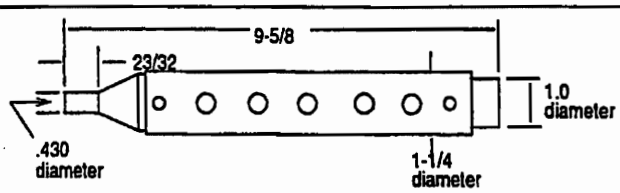	Routine applications.	Vinyl Line: 11 feet.
CPVC	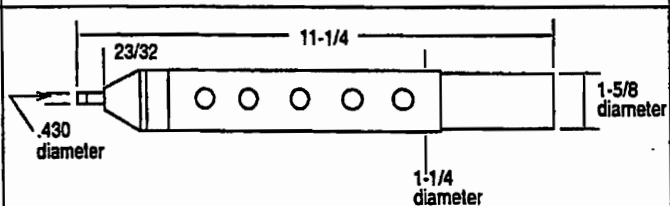	Highly acidic liquids.	Vinyl Line: 4 feet.
Stainless Steel Low-Flow	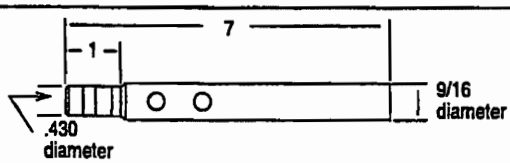	Very low flow stream depths.	Vinyl Line: 7 feet.

Notes:
- The suction lines will float when filled with air during the purge cycles and when depths exceed the listed ratings. Secure the suction lines when sampling at depths exceeding the maximum ratings.
- All strainer dimensions are in inches.
- Teflon suction line is compatible only with the 1 inch diameter, stainless steel strainer.

HOW DOES THE SAMPLER WORK?

When the sampler takes a sample, it draws liquid through the strainer and suction line to the pump tube. The liquid flows through the pump tube and past the liquid detector, which senses the liquid. From the detector, the liquid follows the pump tube through the pump to the bulkhead fitting and then through the discharge tube to the sample bottle.

A typical sampling cycle consists of:

1. The sampler moves the distributor arm over the bottle that is to receive the sample.
2. The pump reverses for the presample purge.
3. The pump direction changes, filling the suction line.
4. When the detector senses liquid, the sampler begins measuring the sample.
5. After depositing the sample, the pump again reverses for the postsample purge.

Sampling cycles vary somewhat according to program settings for distribution. The sampler can move the distributor arm clockwise and counterclockwise, making a number of distribution methods possible. (In this manual, the words "sample event" refer to a full sampling cycle for any distribution.)

Figure 2.9 Identifying the Sampler Components

a. Controller.
b. Center Section.
c. Peristaltic pump.
d. Liquid Detector.
e. Strainer
f. Suction line
g. Stainless Steel Coupling
h. A pump tube routed from the liquid detector's intake port through the pump, out the detector's discharge port, and over the side of the controller to a bulkhead fitting at the top of the center section.
i. Bulkhead fitting.
j. Discharge tube running from the bulkhead fitting on the inside of the center section through the spring and distributor arm.
k. Distributor arm and spring.

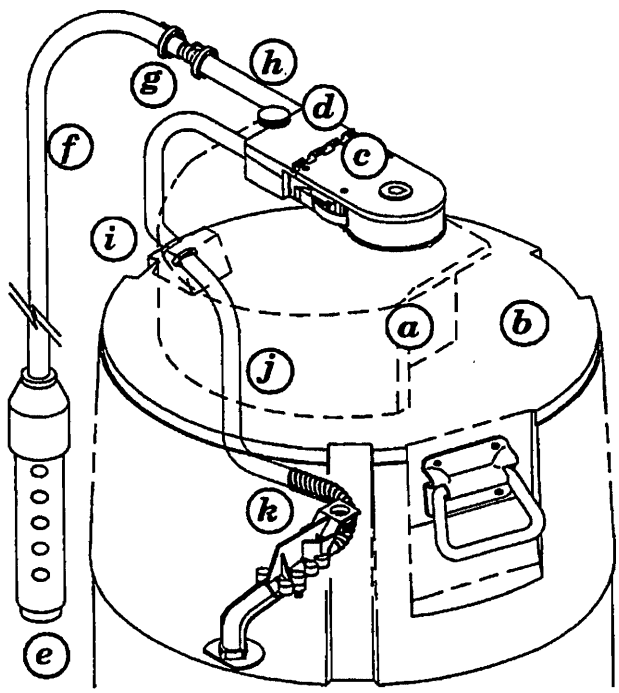

Other variations include extended-program settings for suction-line rinses and sampling retries. A sampler running a program with line rinses completes the presample purge and then rinses the line. The suction line is purged after each rinse. When programmed for sampling retries, the sampler will attempt to pump a sample again if it fails on previous attempts.

Measuring Sample Volume

"Sample volume" refers to the amount of liquid delivered into a bottle. The volume is determined by the programmed value. The volume is dependent on the volume per revolution of the pump, which is dependent on the suction head. The 6712 delivers the sample by counting the pump revolutions and automatically compensating for the suction head.

INSTALLING THE SAMPLER

Icing the Samples

Place the ice into the center of the bottle kit or around the composite bottle. The ice capacity varies according to the bottle kit. To increase cooling for the sequential bottle kits use an ice-water bath. Place as much ice as possible in the center of the bottle kit and slowly add cold water. Continually add ice, as the water will melt some ice.

Always use the retaining rings or hold downs. They hold the bottles in position and keep the bottles from floating.

Tips for Routing Suction Line

Route the line so that it runs continuously downhill from the sampler to the liquid source. This helps drain the line during presample and postsample purges. When sampling in near freezing temperatures, thorough drainage reduces the chances of ice blocking the line. Avoid loops of coiled suction line.

Intake Placement

For representative samples, place the intake in the main current of the flow stream, not in an eddy or at the edge of flow. Placing an intake at the bottom may produce samples with excess heavy solids and no floating materials, while placement at the top may produce the opposite conditions.

WARNING

The 6712 samplers have not been approved for use in hazardous locations as defined by the National Electrical Code.

Positioning a Sampler

Place the sampler on a relatively flat, horizontal surface. Placing the sampler on a steep incline may cause the sample to miss the bottle mouth.

When installing the sampler, be sure the vertical distance between the level of the liquid and the pump is as small as possible.

WARNING

If you must enter a manhole or other dangerous location to install the sampler, observe standard safety precautions. Refer to Appendix C for a discussion of safety considerations.

Using the Suspension Harness or ProHanger

Isco has a stainless steel suspension harness to lower or raise the sampler through a manhole or suspend the sampler during operation. You can suspend the harness from any suitable support. Prohanger is an X-shaped bracket that fits inside the lip of a manhole and lets you suspend the sampler using a cable harness.

CONNECTING EXTERNAL INSTRUMENTS

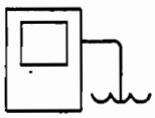

Flow Meter Connector

CAUTION

Most Isco flow meters are not certified for use in hazardous locations as defined by the National Electrical Code. Contact your Isco representative for your equipment's status. Never operate equipment in hazardous locations that has not been certified as safe for such use. Refer to Appendix C in the back of this manual for more safety information.

Rain Gauge Connector

Flow Meter Connector

Connect the sampler to Isco flow meters, flow loggers, or 1640 Liquid Level Actuators by attaching their connect cable to the Flow Meter Connector. When using the sampler with an external instrument, remember these guidelines:

- Both the sampler and the flow instrument must be on and running a program.
- If using a flow meter or flow logger for flow pacing, the sampler and the flow instrument must both run programs with flow pacing settings.
- If using a flow meter or flow logger for trigger pacing, the sampler must run a program with flow pacing settings, and the flow instrument must run a program with trigger pacing settings.
- When the sampler runs an event-paced program, it disregards pacing pulses from a flow meter or flow logger. However, the sampler continues to monitor for enable signals.

Rain Gauge Connector

Connect the rain gauge, SDI-12 Sonde, or Refrigerator Temperature Sensor connect cables to the nine-pin Rain Gauge Connector. When connecting a rain gauge and an SDI-12 Sonde, or rain gauge and a Refrigerator Temperature Sensor, use the appropriate Y-connect cable. See the Accessories appendix at the end of this manual.

☑ Notes

- Select Extended Programming to use the SDI-12 sonde. (See *Changing to and from Extended and Standard Screens* on page 4-1.)
- Update the Hardware Setup whenever you add or remove an SDI-12 sonde. (See Chapter 6.)

In extended programming, rain gauge and SDI-12 sonde readings are only available if they are selected in the Hardware Setup.

Table 2.4 Connecting Isco Instruments to the Sampler

CONNECTOR ICON		CONNECT THESE INSTRUMENTS:
Power Source	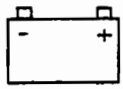	• 12 volt power source
Rain Gauge		• 674 Rain Gauge • Programmable I/O Pins (pins C, H, and I) • SDI-12 Sonde • Refrigerator Temperature Sensor
Interrogator	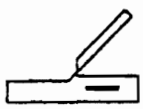	• 581 RTD (Rapid Transfer Device) • IBM PC or compatible computer running FLOWLINK or SAMPLINK • External Modem • External Data Logger/Controller
Flow Meter	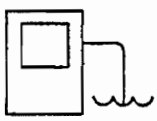	• 1640 Liquid Level Actuator • 3000 Series Flow Meters • 4100 Series Flow Loggers • 4200 Series Flow Meters • Master/Slave Sampler • Pulse Duration Input Interface • 4-20 mA Input Interface

LOCKING THE SAMPLER

Isco offers stainless steel cables to lock the sampler (standard size – use P/N 68-6700-134; compact – use 68-6700-111). To lock the sampler, place the hook through the center section latch. Repeat this for the other two latches, and then pull the ends of the cables together over the top of the sampler. Lock the loops with the padlock. You can also lock each latch individually, using three padlocks, one for each of the latches.

SERVICING THE SAMPLER

Servicing the sampler includes:

- Recovering the sampler from the monitoring site;
- Collecting the filled sample bottles and replacing them with clean bottles;
- Replacing a battery, if required;
- Collecting the data recorded by the sampler during the program.

Samplers are usually serviced after they complete a sampling program. When working up a service schedule, you will need to estimate the program completion time. You should also be familiar with the program's settings for the start time or if the sampler is programmed for continuous sampling.

Continuous sampling is controlled by the distribution setting entered at the "RUN CONTINUOUSLY?" screen. A "YES" response directs the sampler to reset the distribution sequence and continue the countdown to the next sample event. Appropriate service intervals will prevent overfilled bottles.

Removing Bottles from the Compact Sampler

RECOVERING THE SAMPLER

When recovering the sampler, keep it level to prevent spilling the collected samples.

If the battery's charge is questionable, replace it with a fully-charged battery.

The 6712 has a "fuel gauge" that gives an indication of power usage. The controller keeps track of how much power has been consumed since the last time it lost power. The current power consumption, as well as the previous power consumption, can be accessed by pressing the STOP key while in the main menu.

Keep in mind that the sampler has no idea as to how much charge was originally stored in the battery (or even if a battery is being used), and therefore has no idea as to the remaining capacity of its power source.

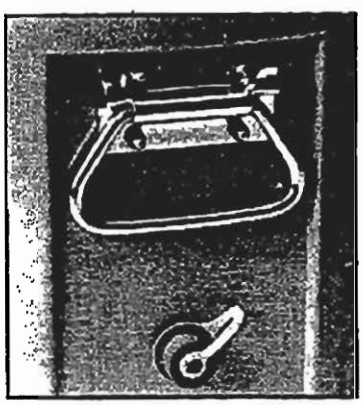

Drain Plug on the Standard Sampler

COLLECTING SAMPLE BOTTLES

If you return the entire sampler back to the office, place caps on the bottles and drain any water from the carrier or tub. If you leave the sampler at the site and only need to collect the bottles, follow these guidelines for bottle collection.

Compact Sampler Bottle Collection

1. Open the latches, and lift the center section from the tub. Place caps on the bottles.
2. Remove the bottles by lifting the bottle carrier from the tub. Attach a label to the carrier detailing the location, date, etc.
3. Pour any ice water out of the tub.
4. Slide a new bottle carrier filled with clean bottles into the tub.
5. Pour more ice in the carrier or tub.

Standard Sampler Bottle Collection

1. Open the latches, and lift the center section from the tub. Place caps on the bottles.
2. Drain any ice water from the standard tub by opening tub's drain plug. Remember to replace the plug's cap when done.
3. Attach a label to the tub or on each bottle detailing the location, time, date, etc.
4. Replace the standard tub and/or bottles with a clean set.
5. Pour more ice in the tub.

Chapter 3 Getting Started

Chapter Contents

- *Getting Started*
- *The Keypad*
- *Using Menus and Entering Numbers*
- *Quick View Screens*
- *Clock and Calendar*
- *Messages*
- *Menu Trees*

Before programming the 6712, you should become familiar with its keys and how to use the screens.

The 6712 Sampler has two sets of programming modes. The first mode, **standard programming**, lets you set up typical sampling programs easily and efficiently. The second mode, **extended programming**, lets you create sophisticated programs for complex sampling applications.

All of the sampling features available in standard programming mode are available in extended programming mode. However, extended programming provides many additional features.

Standard and extended programming features are explained in separate chapters. This chapter focuses on some basic features that are common to both programming modes, such as using the menus and setting the clock.

GETTING STARTED

Turn the sampler on by pressing the On/Off key. It is labeled with this icon: ⏻. The start-up screen appears first.

```
6712 SAMPLER
STANDARD PROGRAMMING
For HELP at any
screen press ? key.
```

It remains on the display for about eight seconds or until you press a key. It tells you the type of programming screens the sampler is currently using — standard or extended — and gives you a tip about the on-line help. The main menu screen, shown below, appears next.

6712 Front Panel

```
RUN
PROGRAM
VIEW REPORT
OTHER FUNCTIONS
```

(If a module is attached, there may be a different screen that appears first. See the module manual for more information.)

The sampler is shipped so that the standard programming screens appear when you first turn the sampler on. You can switch between programming modes by typing in a numerical command at the main menu:

- At the main menu type **6712.2** to show the extended programming screens.
- At the main menu type **6712.1** to show the standard programming screens.

The sampler will continue to use the program mode you selected, even if the sampler is turned off and on again, until you manually switch to the other programming mode.

Table 3.1 About the Keypad

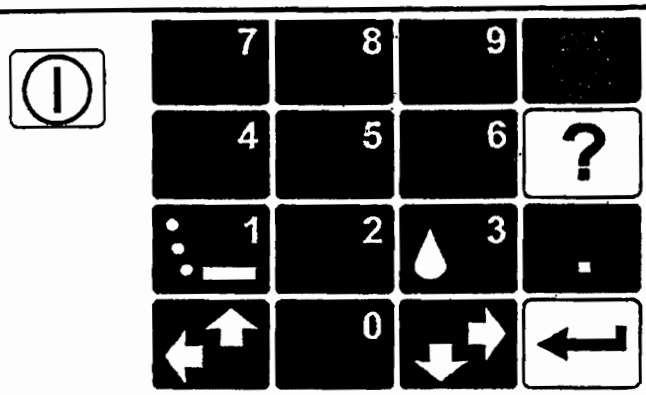

KEY	NAME	FUNCTION
	On-Off	Turns sampler on or off.
	Stop	Stops the pump or distributor. Pauses a running sampling program. In programming screens, returns to a previous screen.
	Enter	Accepts a menu choice or number entry and goes to next screen.
?	Help	In programming screens, displays a brief help message.
	Down-Right Arrow	Selects the menu option right or below the current choice.
	Up-Left Arrow	Selects the menu option left or above the current choice.
0	Numbers	Types a number.
.	Decimal Point	Types a decimal point.
1	Pump Reverse	Press when at the main menu to run the pump in reverse.
3	Pump Forward	Press when at the main menu to run the pump forward.

About the Display Backlight

If you press a key and the screen does not seem to respond, it is probably because the keystroke turned the backlight on, instead of acting on the screen.

Selecting a Language

You have the option of having screens display in English or another language. The default is English. At the main menu, type **6712.8**:

```
ENGLISH
SPANISH
```

Use the arrow keys to move between the choices (languages other than those shown above could appear on your unit). When the language choice you want is blinking, press ↵ (Enter).

USING MENUS AND ENTERING NUMBERS

A menu is a list of options. The main menu has four options:

- RUN
- PROGRAM
- VIEW REPORT
- OTHER FUNCTIONS

The Main Menu

```
RUN
PROGRAM
VIEW REPORT
OTHER FUNCTIONS
```

The options identify the operations that can be performed from the menu. For example, to run the sampling program, select RUN; to modify the program, select PROGRAM.

Selecting Menu Options

In menu screens, one menu option always blinks.

- Press ↵ (Enter) when the blinking option is the one you want; it will accept your choice and go to the next screen.

The ↵ (Enter) key always accepts the blinking option.

- Select a different option by pressing an arrow key until the option you want blinks. Then press ↵ (Enter).

Entering Numbers

Number-entry screens prompt you to enter a value. An example is shown to the left.

Entering Numbers

```
SUCTION LINE LENGTH
IS __ ft
(3-99)
```

• Type the length of the suction line. Acceptable values are shown between the parentheses. Press ↵ (Enter) to accept the number.

To enter a number:

Press the number keys to type the number. Then, press ↵ (Enter). As soon as you press ↵ (Enter), the sampler saves your number and moves to the next screen. In some screens, you can use the • (Decimal Point) key in a number.

Some screens display the range of acceptable numbers between parentheses. If an entry is too low or high, the controller beeps and erases the entry. Type a new number and continue.

QUICK VIEW SCREENS

Quick view screens are a special type of menu screen. They show the current program settings and let you move quickly through the program. You must change the programming style to QUICK VIEW/CHANGE to see the quick view screens, as shown below:

1
```
RUN
PROGRAM
VIEW REPORT
OTHER FUNCTIONS
```
Select OTHER FUNCTIONS.

2
```
MAINTENANCE
MANUAL FUNCTIONS
PROGRAMMING STYLE
```
Select PROGRAMMING STYLE.

3
```
PROGRAMMING STYLE
NORMAL
QUICK VIEW/CHANGE
```
Select QUICK VIEW/CHANGE.

Quick View Screens in Standard Programming

```
RUN
PROGRAM
VIEW REPORT
OTHER FUNCTIONS
```

- To see the quick view screens, select PROGRAM.

```
↑
SITE DESCRIPTION:
"SITE 29 "
                ↓
```

- Use the keypad's arrow key to select ↓ for the next quick view screen. When ↓ is blinking, press ↵ (Enter).
- Use the keypad's arrow key to select ↑ for the previous quick view screen. When ↑ is blinking, press ↵ (Enter).
- Use the keypad's arrow key to select the program setting. When the setting is blinking, press ↵ (Enter) to display the screen used to change the setting.
- Press Stop for the main menu.
- All quick view screens work the same way.

Paging Through Quick View Screens

The arrows in the corners of each quick view screen are menu options that let you move from one quick view screen to another.

- Select the reverse arrow (↑) to go to the previous screen.
- Select the forward arrow (↓) to go to the next screen.
- Press Stop to return to the main menu.

Because the forward arrow is always blinking when the screen appears, you can simply press ↵ (Enter) to go to the next quick view screen, making it easy to page through the screens.

Changing Settings in a Quick View Screen

Although the quick view screens offer you a quick way to see the program settings, they also provide you with a way to change settings. Using quick view screens to change settings is sometimes a faster way to change a program because you can go quickly to the setting or settings that needs updating.

To change the program settings in a quick view screen:

Press an arrow until the setting blinks. Press ↵ (Enter). The 6712 then displays the screen used to change the setting.

The Quick View screens below shows you how to change the sample volume. Begin by paging through the quick view screens until you see the screen containing the sample volume setting:

```
↑
200 ml SAMPLES
                ↓
```

- Press the arrow key until 200 ml SAMPLES blinks. Then press ↵ (Enter).

```
SAMPLE VOLUME:
250 ml (10-1000)
```

- Type the new sample volume and press ↵ (Enter).

```
↑
250 ml SAMPLES
                ↓
```

When you change a setting, the sampler stores the new settings and returns to the updated quick view screen. You can repeat this process until all settings shown in the quick view screens have been changed. When you are done, select the screen's forward arrow to move to the next quick view screen, or press Stop to return to the main menu.

CLOCK AND CALENDAR

You may have to set the internal clock or calendar. The samplers are shipped with their clocks set to U.S. Central Standard time. If your sampler operates in a different time zone, you will have to reset the clock. The example below shows you how to find the time and date screen.

Entering Times and Dates

```
ENTER TIME AND DATE:
HH:MM  DD-MON-YY
__:__  __-__-__
```

- Move from one field to another by pressing the arrow keys.
- Change a setting in a field by typing a number. Press ↵ (Enter) to accept the new setting.

When setting the clock and calendar, use a 24-hour clock for times and the day-month-year format for dates. The illustration at the left shows blanks for each position that accepts an entry. The positions are called fields. When this screen appears on *your* sampler, the fields will contain the sampler's current settings for the time and date.

- To move from one field to another without changing the setting, press the arrow keys. Use this technique when you want to change only one or two settings.
- Change the setting by typing a new number. Press ↵ (Enter) to accept the new setting.

For example, to enter 2:00 p.m. (2:00 p.m is 14:00 on a 24-hour clock), type 14. Press ↵ (Enter). Next, type 0 (zero) for the minutes, and press ↵ (Enter). To enter a date, such as January 22, 2001, type: 22 ↵ 01 ↵ 01 ↵.

Setting the Clock and Calendar

1	RUN PROGRAM VIEW REPORT **OTHER FUNCTIONS**	Select OTHER FUNCTIONS.
2	**MAINTENANCE** MANUAL FUNCTIONS PROGRAMMING STYLE	Select MAINTENANCE.
3	**SET CLOCK** PUMP TUBE ALARM INTERNAL BATTERY DIAGNOSTICS	Select SET CLOCK.
4	ENTER TIME AND DATE: HH:MM DD-MON-YY **14:00 22-JAN-01**	Enter the time and date.
5	SET CLOCK PUMP TUBE ALARM INTERNAL BATTERY DIAGNOSTICS	Press Stop to return to the main menu.

Using the Clock Start Time Menu

```
NO DELAY TO START
DELAYED START
CLOCK TIME
```

- Select CLOCK TIME.

```
FIRST SAMPLE AT:
06:00
```

- Type the time of day and press ↵ (Enter).

```
SELECT DAYS:
SU MO TU WE TH FR SA

DONE
```

- Press an arrow key until the cursor is on the correct day. Then, press ↵ (Enter). To remove a day, move the cursor to it and press ↵ (Enter) to deselect it.
- Repeat these steps until each day you want is blinking.
- Press an arrow until DONE blinks. Press ↵ (Enter).

Changing the Site Name

```
SITE: "FACTORY01"
ABCDEFGHIJKLMNOPQRST
UVWXYZ-& "0123456789
BACK-UP  DONE
```

```
SITE: "SACTORY01"
ABCDEFGHIJKLMNOPQRST
UVWXYZ-& "0123456789
BACK-UP  DONE
```

- Press the Down-Right arrow until the S on line 2 blinks. Then, press ↵ (Enter).

```
SITE: "SICTORY051"
ABCDEFGHIJKLMNOPQRST
UVWXYZ-& "0123456789
BACK-UP  DONE
```

- Press the Up-Left arrow until the I blinks. Press ↵ (Enter).
- Continue pressing arrow keys to select T, E, and space. Press ↵ (Enter) after selecting each character.

(continued on next page)

Menu Screens: Clock Start Times

There are three start time settings you can use in a sampling program. This section discusses only one of these settings, the clock start time. A clock start time lets you set up a sampling program that starts at the same time on one or more days of the week. For example, you may want to begin sampling at 6:00 a.m. on Monday through Friday (refer to the screen to the left).

To select a day or days from the menu:

1. Press an arrow key until the cursor is on the correct day. Then, press ↵ (Enter).
2. Repeat these steps until each day you want is blinking.
3. Press an arrow until DONE blinks. Press ↵ (Enter).

To remove days from the list:

1. Press an arrow key until the cursor is on the day you want to remove. Press ↵ (Enter) to deselect it.
2. When finished, select DONE and press ↵ (Enter).

Menu Screens: Site Descriptions and Program Names

The sampler has two text-entry menus, one for site description and another for an extended-program name. They work in the same way. A site description is commonly a number, address, or other short note that helps identify the monitoring site. Extended programming has a similar screen that lets you enter program names for stored programs.

The example to the lower left shows how to change the site description from FACTORY01 to SITE 29. Line 1 contains text between two quotation marks. Lines 2 and 3 contain the menu options — numbers, letters, and punctuation marks — used to spell out the description. In line 3, the space between the ampersand (&) and the double quotes (") is a space character. Line 4 contains two additional options:

- BACK-UP, an option that moves the cursor on the text line to the left one character.
- DONE, an option that tells the sampler to save the text.

The cursor is the blinking rectangle that identifies the current field. When the screen first appears, the cursor blinks on the first character of the text in line 1. The matching character in line 2 or 3 also blinks.

When you press ↵ (Enter), the cursor on line 1 moves to the right one position, and, at the same time, the sampler blinks on the matching character on lines 2 or 3.

To change any character in the text line:

1. Press the left or right arrow until the replacement character on lines 2 or 3 blinks.
2. Press ↵ (Enter). The replacement character will appear on the first line, and the cursor will move to the next character.

Repeat steps 1 and 2 until the text in the top line is complete.

3. Finish the entry by selecting DONE. Then, press ↵ (Enter).

Site Description or Program Name Menus (Continued)

```
SITE: "SITE 29   "
ABCDEFGHIJKLMNOPQRST
UVWXYZ-&_"0123456789
BACK-UP  DONE
```

- Press 29 on the keypad, then Up-Left until space blinks. Press ↵ (Enter).

```
SITE: "SITE 29   "
ABCDEFGHIJKLMNOPQRST
UVWXYZ-&_"0123456789
BACK-UP  DONE
```

- Press the Down-Right arrow until DONE blinks. Press ↵ (Enter).

Some additional tips for using the text-entry menus:

- Hold an arrow key down for faster movement.
- If your description uses all ten spaces in the text line, the sampler automatically moves to the next screen as soon as you add the tenth character.
- You can enter numbers by pressing the number keys.
- Erase characters by replacing them with a space character.
- Select the BACK-UP option to move the cursor to the left.
- To leave the menu before completing the entry, press Stop. The sampler will display this menu:

```
SAVE CHANGES?
YES  NO
```

Select YES to save any changes made. Select NO to leave the original description (or program name) unchanged.

MESSAGES

The sampler has four sets of messages that supplement the programming screens. **Information messages** tell you about programming status. **Help Notes** are brief comments associated with programming screens describing the setting or offering assistance. **Warning messages** tell you something is different than Isco's standard. **Operation messages** report the sampler's status as it runs a program.

Information Messages

These are brief messages about the programming status, such as " 'ROM' PASSED TEST" or the status message that displays when you first start up the sampler. Information messages are displayed for four seconds, unless they are terminated by pressing any key on the keypad.

Help Notes

To see a Help note:

1. Press the ? (Help) key.
2. When the note requires several screens, the word "more" appears in the lower-right corner. Press ↵ (Enter) for the next note.
3. Move back and forth between screens by pressing the arrow keys.
4. Press Stop at any time to return to the programming screen.

Most help notes refer to a related section in this manual. Screens that require extensive explanation have notes that contain only a reference to the manual. Sections mentioned in the notes appear in the index and the table of contents.

Using Help Notes

Although this example shows the help notes that are associated with the suction-line length screen, you can use the same technique to see help notes for other screens.

```
SUCTION LINE LENGTH
IS 7 ft
(3-99)
```

- Press ? (Help).

```
Enter the length of
suction line only,
excluding strainer
and pump tube.      <more>
```

- Press ↵ (Enter) or Down-Right to see the next screen.
- Press Stop to return to the programming screen.

```
See "Installing
Suction Line" in
your manual.
                    <more>
```

- Press ↵ (Enter) or Down-Right to see the next screen.
- Press Up-Left to see the previous screen.
- Press Stop to return to the programming screen.

Warning Messages

Warning messages appear when the sampler determines something is out of the ordinary. For example, the following warning appears when you type a number that is larger than the standard bottle volume:

```
BOTTLE VOLUME IS
3500 ml  (300-30000)
```

```
WARNING!
STANDARD BOTTLE
VOLUME EXCEEDED!
```

The 6712 *does* accept nonstandard volumes because you might use a nonstandard container occasionally. For a list of recommended volumes for Isco bottles press the ? (Help) key at the "Bottle Volume Is" screen, or refer to the Technical Specifications.

The 6712 uses the bottle and sample-volume settings to determine the maximum number of samples that can be deposited without overfilling the bottles. Entering a volume that exceeds the standard volume may cause the sampler to overfill the bottle.

Operation Messages

An operation message reports the sampler's status as it runs a program. An example is shown below.

```
PROGRAM WILL START
AT 06:00  TU  20-FEB

05:56:22  TU  20-FEB
```

MENU TREES

Selecting a menu option will take you to a number-entry screen or another menu screen. The screens are organized in a branching structure that resembles a tree. Refer to Figure 3.1 for a simple chart of the menu tree for standard programming. The standard programming structure is different — much simpler — than the extended programming structure. Charts that show you most of the sampler's screens appear in *Appendix A, Flowcharts*.

The entire structure changes a little when a module is attached because the sampler adds a set of screens for a module as soon as it detects the module's presence. The manuals for each module contain menu trees for its programming screens.

Figure 3.1 Menu Tree for Standard Programming

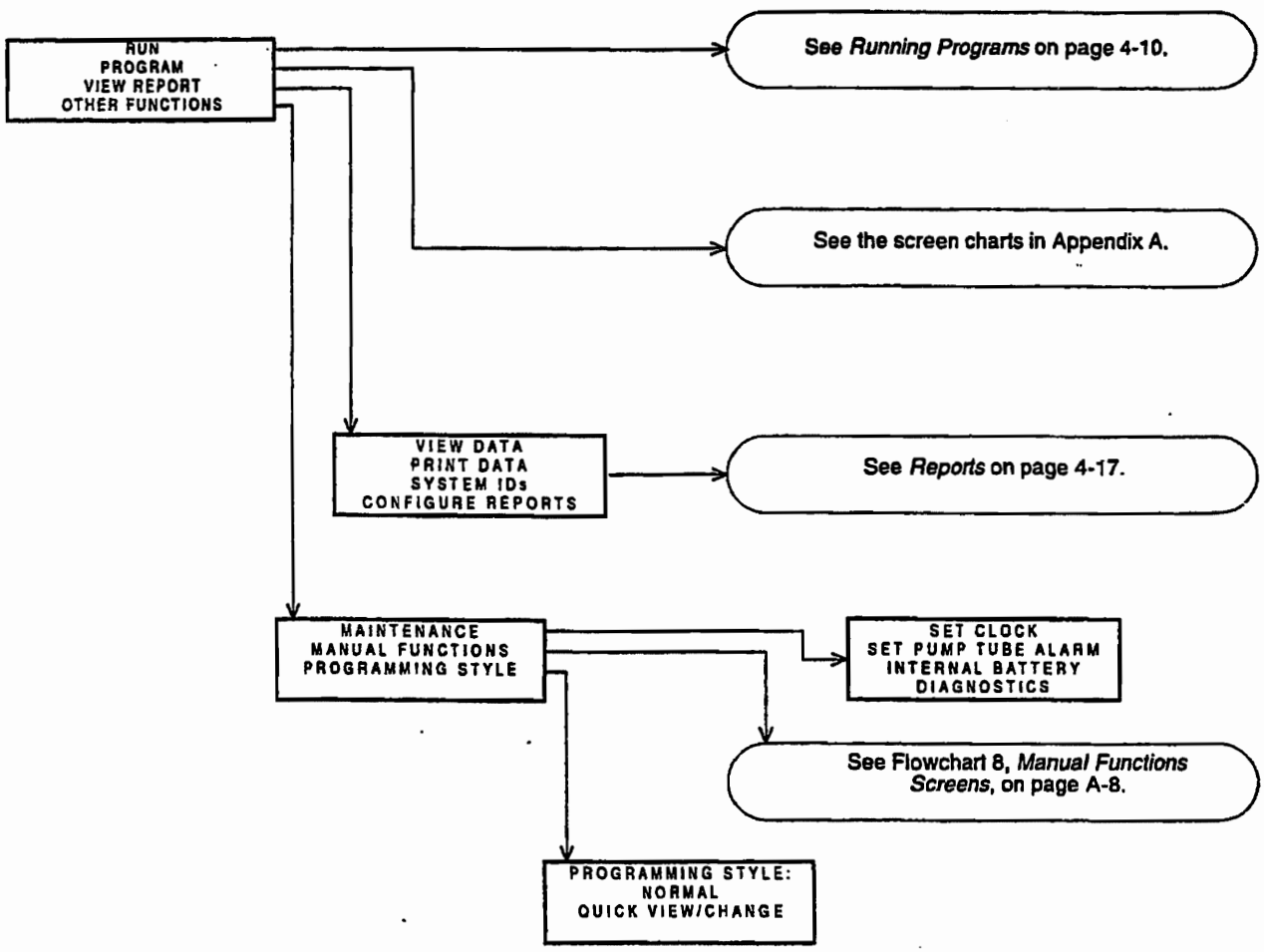

Notes

Chapter 4 Standard Programming

Chapter Contents

- *Changing to and from Standard and Extended Mode*
- *Selecting Language, Units of Length*
- *Programming Examples*
- *Pacing*
- *Start Times*
- *Running Programs*
- *Interrupting a Running Program*
- *Grab Samples*
- *Calibrate Volume*
- *Operating the Pump*
- *Moving the Distributor Arm*
- *Reports*
- *Programming for 700 Series Modules*

The 6712 Sampler has two sets of programming screens. The first set, called standard programming screens, lets you set up typical sampling programs easily and efficiently. The second set, extended programming screens, lets you create sophisticated programs for complex sampling applications.

All of the sampling features available within the standard programming screens are available in extended programming. However, extended programming provides several additional features which are discussed in the next chapter. Menu flowcharts for both sets of programming screens are in Appendix A.

CHANGING TO AND FROM STANDARD AND EXTENDED MODE

The sampler is shipped so that it defaults to standard programming mode when you first turn the sampler on. The start-up screen tells you which programming mode the sampler is currently using. You can switch between programming modes by entering a numerical command at the main menu:

- At the main menu, type **6712.1** to enter standard programming mode.
- At the main menu, type **6712.2** to enter extended programming mode.

```
RUN
PROGRAM
VIEW REPORT
OTHER FUNCTIONS
```

Main Menu

SELECTING LANGUAGE, UNITS OF LENGTH

You have the option of displaying screens in English or Spanish (or possibly another language). The default is English. At the main menu, type **6712.8** to display:

```
ENGLISH
SPANISH
```

Use the arrow key to move between the two choices. When the desired choice is blinking, press ↵ (Enter).

If you select the English option, you will advance to a second screen that asks you to select your units of length:

```
SELECT UNITS FOR
LENGTH:
ft    m
```

Use the arrow key to move between the two choices, feet or meters. When the desired choice is blinking, press ↵ (Enter). The default unit of length for the Spanish option is meters.

PROGRAMMING EXAMPLES

The next two examples provide the steps you would follow for a couple of different types of sampling. Further details about some of the menu items are provided in later sections.

Example 4.1 Program: One Sample Every 15 Minutes, One Sample in Each Bottle Using Standard Programming Style

1	6712 SAMPLER STANDARD PROGRAMMING For HELP at any screen press ? key.	Turn the sampler on by pressing the On/Off key. Press ↵ (Enter). This screen disappears on its own after 8 seconds.
2	RUN PROGRAM VIEW REPORT OTHER FUNCTIONS	The option PROGRAM will be blinking. Press ↵ (Enter).
3	SITE DESCRIPTION: "FACTORY051" CHANGE? YES NO	The option NO will be blinking. Press ↵ (Enter). For the purposes of this example, it isn't necessary to change the description.
4	NUMBER OF BOTTLES: 1 2 4 8 12 24	Select the number of bottles in your bottle kit by pressing either arrow key until the correct number blinks. Press ↵ (Enter). For this example, select 24.
5	BOTTLE VOLUME IS 1000 ml (300-30000)	Type the volume for the bottles in your kit. For this example, 1000 is correct, so simply press ↵ (Enter).
6	SUCTION LINE LENGTH IS 10 ft (3-99)	Type the length of the suction line, then press ↵ (Enter). If you change the length, the sampler will display a message, "PLEASE WAIT!. . . GENERATING PUMP TABLES."
7	TIME PACED FLOW PACED	Because this example requires samples every 15 minutes, select TIME PACED by pressing an arrow until the option TIME PACED blinks. Then, press ↵ (Enter).
8	TIME BETWEEN SAMPLE EVENTS 0 HOURS, 15 MINUTES	Type 0 for hours and press ↵ (Enter). Type 15 for minutes and press ↵ (Enter). Tip: Move back and forth between hours and minutes by pressing an arrow key.
9	SEQUENTIAL BOTTLES/SAMPLE SAMPLES/BOTTLE	Because this program requires one sample in each bottle, select SEQUENTIAL by pressing an arrow until the option SEQUENTIAL blinks. Then, press ↵ (Enter).
10	RUN CONTINUOUSLY? YES NO	For this example, select NO by pressing an arrow until the option blinks. Then, press ↵ (Enter). Selecting YES allows the program to run indefinitely by repeating the sample distribution. Continuous sampling assumes that filled bottles are replaced with empty bottles at regular service intervals.
11	SAMPLE VOLUME: 200 ml (10-1000)	Type the volume of the sample you want deposited in each bottle. Then, press ↵ (Enter).

12	NO DELAY TO START **DELAYED START** CLOCK TIME	For this example, select DELAYED START by pressing an arrow until the option blinks. Then, press ↵ (Enter).
13	FIRST SAMPLE AFTER A 5 MINUTE DELAY (1-999)	Type the delay period you want between the time you run the program and the time the sampler takes the first sample. Then, press ↵ (Enter).
14	PROGRAMMING COMPLETE RUN THIS PROGRAM NOW? YES **NO**	Run the program immediately by selecting YES. Select NO if you want to run the program later by selecting RUN from the main menu. Press ↵ (Enter) after making your choice. In this example, NO is selected.
15	**RUN** PROGRAM VIEW REPORT OTHER FUNCTIONS	Run the program by selecting RUN and pressing ↵ (Enter).

Example 4.2 Standard Program: Flow-Paced Sampling, Two Bottles Per Sample

- **Program type:** Standard
- **Site description:** SITE 29
- **Bottle kit:** 24, 1000 milliliter bottles
- **Suction line length:** 7 feet
- **Pacing:** Flow pacing, every two pulses
- **Distribution:** 2 bottles per sample
- **Sample Volume:** 250 milliliters
- **Start time:** Clock Time, 6:00 A.M. on Monday, Wednesday, Frida
- **Module:** No module installed

1	6712 SAMPLER STANDARD PROGRAMMING For HELP at any screen press ? key.	
2	RUN **PROGRAM** VIEW REPORT OTHER FUNCTIONS	Select PROGRAM.
3	SITE DESCRIPTION "SITE 29 " CHANGE YES NO	Select NO. (The margin example, *Changing the Site Name* on page 3-6, shows you how to change the description of the site.)

(continued on next page)

4	NUMBER OF BOTTLES 1 2 4 8 12 **24**	Select 24.
5	BOTTLE VOLUME IS 1000 ml (300-30000)	Enter 1000.
6	SUCTION LINE LENGTH IS 7 ft (3-99)	Enter 7.
7	TIME PACED **FLOW PACED**	Select FLOW PACED.
8	FLOW BETWEEN SAMPLE EVENTS: 2 PULSES (1-9999)	Enter the number of pulses between sample events.
9	SEQUENTIAL **BOTTLES/SAMPLE** SAMPLES/BOTTLE	Select BOTTLES/SAMPLE.
10	2 BOTTLES PER SAMPLE EVENT (1-24)	Enter 2.
11	RUN CONTINUOUSLY? YES **NO**	Select NO.
12	SAMPLE VOLUME: 250 ml (10-1000)	Enter 250.
13	NO DELAY TO START DELAYED START **CLOCK TIME**	Select CLOCK TIME.
14	START FLOW COUNT AT: 06:00	Enter 6, then enter 0. This is the time at which the sampler will start the pacing countdown.
15	SELECT DAYS: SU **MO** TU **WE** TH **FR** SA DONE	Select MO, WE, and FR. Use the arrow keys and ↵ (Enter) to select MO, WE, and FR. When the correct days are blinking, select DONE and press ↵ (Enter).
16	PROGRAMMING COMPLETE RUN THIS PROGRAM NOW? YES **NO**	Select NO.

PACING

Sample pacing is the rate at which the sampler takes samples. Depending on the type of pacing you select, the rate is controlled by the sampler's internal clock or by inputs received from connected instruments.

Standard Time Pacing and Flow Pacing Screens for Samplers without Flow Modules

```
TIME PACED
FLOW PACED
```

- When programming, you will be asked to select time or flow paced sampling. Depending upon your choice, you will see one of the following screens:

```
TIME BETWEEN
SAMPLE EVENTS:
__ HOURS, __ MINUTES
```

```
FLOW BETWEEN
SAMPLE EVENTS:
____ PULSES (1-9999)
```

Standard programming provides time pacing and flow pacing (refer to Step 7 in the previous two programming examples). In time-paced sampling, the interval between samples is a constant time interval. When you program the sampler for time pacing, the sampler prompts you to enter the time between sample events in hours and minutes. Time paced programs always take a sample at the start time.

Flow paced sampling requires a flow meter, flow logger, or a module. A flow meter or flow logger paces a sampler by sending an electronic signal to the sampler after measuring a specified volume of liquid. Because each pulse represents a volume interval, flow pacing rates are proportional to the volume of water flowing through the channel.

When you program the sampler for flow pacing and are using a flow meter or flow logger, the sampler prompts you to enter the interval between sample events in pulses. The sampler initiates a sample event when the set number of pulses is received. Programs that are flow paced do not take a sample at the start time.

Flow Pacing Screen for Samplers with Flow Modules

```
FLOW BETWEEN
SAMPLE EVENTS:
____ Mgal
(0.001-99999)
```

The flow pacing screens change when you attach a flow module (see example to the left). Because the sampler is more closely integrated with the modules, the standard flow pacing screen prompts you for the flow volume between sample events instead of pulses between events. The flow volume units displayed are what you had previously programmed.

Trigger Pacing

Isco 4200 Series Flow Meters and 4100 Series Flow Loggers send pulses for trigger pacing. The flow meter or flow logger sends pulses at two different time intervals when trigger pacing a sampler. Trigger pacing, for example, lets you sample less frequently when the trigger condition — a condition based on level, flow, or rainfall — remains below a set point. The intervals are determined by the flow instrument's program settings for trigger pacing.

When conditions change and readings pass the set point, triggering the new rate, you can sample more frequently. Or, when the trigger condition is a clock setting, the instrument changes the pacing interval according to the time of day. Using a clock trigger condition, for instance, the flow meter or flow logger can pace the sampler slowly at night and more frequently during the day. (For more information about trigger pacing, see your flow meter or FLOWLINK manual.)

The flow meter or flow logger sends the same pulse for both flow and trigger pacing, and the sampler cannot distinguish between them. Therefore, to program a sampler for trigger pacing, simply program it for flow pacing.

DISTRIBUTION

Distribution describes how the sampler is to deposit samples. A sample is the volume of liquid deposited in a bottle. A sample event includes the full sampling cycle and may deposit a sample into more than one bottle.

In standard programming, you can program the sampler for these different distribution methods:

- Sequential
- Bottles Per Sample
- Samples Per Bottle
- Composite

Sequential

In sequential distribution, the sampler deposits one sample in each bottle. A sequential sample represents a "snapshot" of the flow stream at a point in time.

Bottles Per Sample

In bottles per sample distribution, the sampler deposits a sample in each of a set of bottles. A bottle set includes at least two bottles but may include all bottles. Use bottles per sample when the volume to be collected is larger than the amount one bottle can hold or when you need identical samples.

Samples Per Bottle

In samples per bottle distribution, the sampler deposits samples from several sample events in a single bottle before moving to the next bottle. Use samples per bottle distribution to collect a series of small composite samples.

Composite

For single bottle configurations, samples per bottle distribution is known as composite sampling. A composite sample represents an average of the flow stream's characteristics during the sampling period.

Continuous Sampling

Sample programs can be run indefinitely by selecting "YES" at the "RUN CONTINUOUSLY?" screen. Continuous sampling resets the distribution when the distribution sequence is complete. That is, when the last bottle/set is reached, the next bottle/set is the first bottle/set. All pacing modes except RANDOM are supported.

When running a program continuously, the bottles must be serviced at regular intervals to prevent overfilling the bottles. The sampler assumes that the next bottle/set is empty and ready to receive samples.

The figure on the next page steps through the programming screens for sequential, bottles per sample, and samples per bottle distribution.

Figure 4.2 Sample Distribution

Sequential

STANDARD PROGRAMMING

Each bottle receives one sample from one sample event.

Bottles-per-Sample

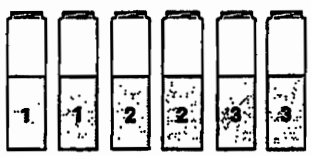

STANDARD PROGRAMMING

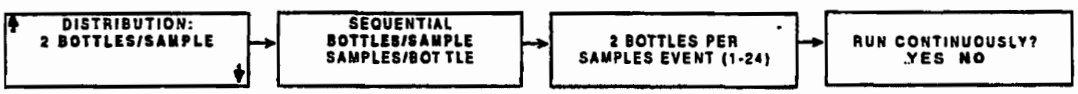

Multiple bottles receive a sample from one sample event.

Samples-per-Bottle

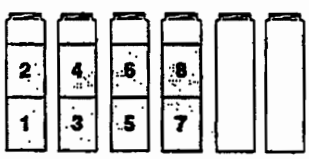

STANDARD PROGRAMMING

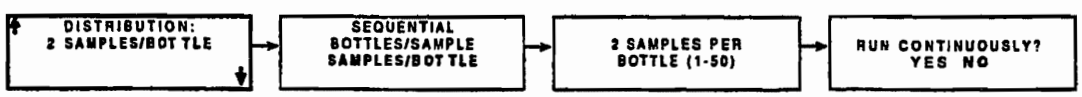

Each bottle receives a sample from multiple sample events.

START TIMES

It is important to understand the difference between the time at which you run a program and the program's start time. Running a program simply means selecting RUN from the sampler's main menu. The start time is the time at which the sampler begins the program's first sample interval countdown. The start time is controlled by your selections from the start time screens.

Each program contains start-time settings that tell the sampler when to begin the program. When programming the sampler, you can select one of three start time options: NO DELAY TO START, DELAYED START, or CLOCK TIME.

- Select NO DELAY TO START when you want the sampler to start as soon as you select RUN.
- Select DELAYED START when you want the sampler to delay from 1 to 999 minutes before starting the program.
- Select CLOCK TIME when you want the sampler to begin the program at a specific time on at least one day of the week.

How Do Start Times Work?

As soon as you select RUN from the main menu, the sampler checks the program's start time settings. With a "DELAYED START" setting, the sampler starts a countdown to the start time. The period between the time you select RUN and the start time you've specified in the program is called the "delay to start time."

When you run a program with "CLOCK TIME" settings, the sampler also starts a countdown to start time until the day of week and clock times are met.

The sampler may not collect a sample at the start time. The sampler must be enabled, and the pacing selected must call for a sample at start. In any event, the sampler checks the pacing settings and begins the pacing-interval countdown.

Delayed Start Screen

1
```
NO DELAY TO START
DELAYED START
CLOCK TIME
```

- Select DELAYED START.

2
```
FIRST SAMPLE
AFTER A
___MINUTE DELAY
(1-999)
```

- Enter the number of minutes to delay the countdown to the first sample.

3
```
START FLOW COUNT
AFTER A
__MINUTE DELAY
(1-999)
```

- The sampler uses this screen for flow paced programs.

Clock Start Time Menu

4
```
NO DELAY TO START
DELAYED START
CLOCK TIME
```

- Select CLOCK TIME.

5
```
FIRST SAMPLE AT
06:00
```

- Enter the time of day.

6
```
SELECT DAYS:
SU MO TU WE TH FR SA

DONE
```

- Press an arrow key until the cursor is on the correct day. Press ↵ (Enter).
- Repeat until each day you want is blinking.
- Press an arrow until DONE blinks. Press ↵ (Enter).

Sampler Enable/Disable

Isco flow meters and flow loggers have a programmable sampler-enable feature that lets them enable (start) or disable (stop) a program according to certain monitored conditions. For example these conditions can be level, flow rate, pH, temperature, percent, rainfall, I/O; or a combination of two conditions.

The Model 1640 Liquid Level Actuator can also be used, as well as any other instrument that can ground the input to pin F. Grounding the input disables the sampler.

The sampler disregards disable signals during the delay to start time. However, when the sampler detects a disable signal at the start time, it suspends the program until it is enabled. The diagram in Figure 4.2 shows the sampler's responses.

Figure 4.2 Start Time Diagram

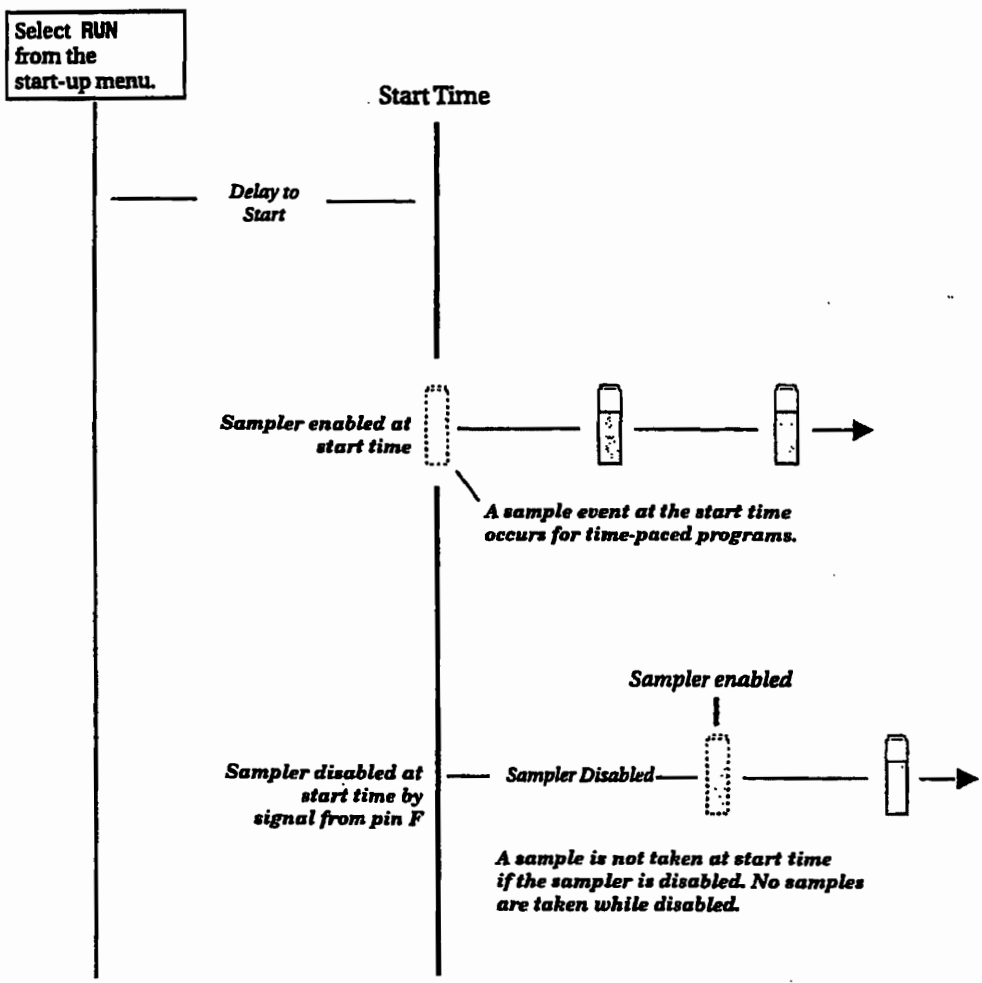

RUNNING PROGRAMS

To run a program, select RUN from the main menu. You may also select YES at the RUN THIS PROGRAM NOW? screen at the end of the programming screens.

Run Time Screens

While running a sampling program the sampler displays a variety of messages that report the program's status. For example, if the sampler has not yet reached the programmed start time, it displays the scheduled start time as well as the current time.

Once the program reaches the start time, you can determine the time of the next sample, the next bottle to receive a sample, sample distribution, and other information. Other messages appear while the sampler runs through a sampling cycle and takes a sample. When the sampler needs to report multiple messages, it alternates them, displaying each for one to three seconds.

Figure 4.3 Running a Program

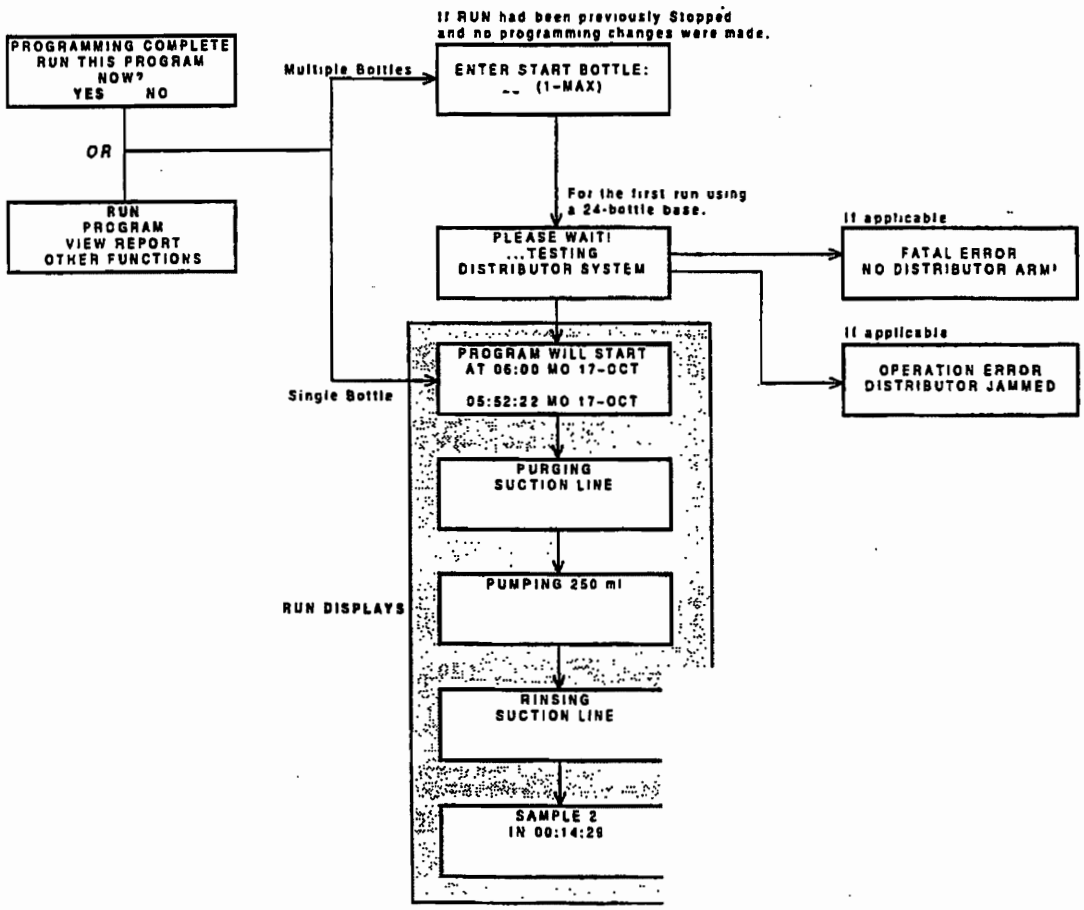

Module Readings

Samplers with an attached module display the module's readings: pH and temperature for the pH module; percentage or flow rate for the 4-20 mA module; level, flow-rate, and flow volume readings for the flow modules; level, velocity, flow-rate, and positive flow volume readings for the area velocity module. Some module screens will alternate with the sampler screens.

```
BOTTLE 2
IN 00:14:39
150 gpm      0.82 ft
00001438200 gal
```

The Module readings are updated:

- Every second when displaying the reading during programming.
- Every minute otherwise.

An * (asterisk) appears next to the reading if the module was unable to take a reading. If an asterisk appears, the reading displayed is the last available reading. Flow rates will be reported as zero flow if the error persists for more than five minutes (for a level or velocity reading that flow is calculated from).

If an entire reading is filled with asterisks, the value exceeds the number of characters that can be displayed. The sampler stores the actual reading in memory, so it may be collected later.

```
BOTTLE 2
IN 00:12:00
***** gpm      5.73 ft
00001457600 gal
```

For those programs that have delayed or scheduled start times, the readings will be displayed while waiting for the start time. Keep in mind that any totalizer values will be reset at the start time. Module and sonde readings are also displayed after a program is complete, until a key is pressed.

It is not necessary to run a program to view module or sonde readings. Real time data can be viewed on the display by selecting "VIEW REPORT" from the main menu.

INTERRUPTING A RUNNING PROGRAM

You can interrupt a sampling program by pressing the Stop key while the sampler is waiting for the next sample event. Pressing Stop places the sampler into *Manual Paused* operation and records a MANUAL PAUSE in the sample event log.

In this state, the sampler allows you to access several functions. You can modify the program, reset alarms, take a grab sample, etc., without adversely affecting the running program. Modifying the program is limited to adjusting the pacing intervals, enable conditions and sample volume. The basic program structure, such as the type of pacing, can not be changed.

While in the manual paused state, the sampling program continues to operate as normal, with the exception of taking samples. If a sample was to be taken, it is skipped. The sampler records "SAMPLE SKIPPED" in the sample event log and continues to operate as normal.

Manual Paused Screen

```
← STOP PROGRAM
  RESUME PROGRAM
  VIEW DATA
  GRAB SAMPLE  →
```

The manual paused state displays a scrolling menu with several options (see example to the left). Use the Arrow keys to scroll through the manual paused options and the Enter key to make a selection. Return to the running program by selecting RESUME PROGRAM or pressing the Stop key. If you do not make a selection, the sampler automatically resumes the original sampling program five minutes after the last key was pressed.

Stop Program

This option terminates the running program and records PROGRAM STOPPED in the sample event log. The program cannot be resumed.

Resume Program

Selecting this option will cause the sampler to exit the manual paused state and return to normal program operation. A MANUAL RESUME event will be logged.

View Data

This option allows you to view the data recorded by the sampler. See *Reports* on page 4-17 for more information.

Grab Sample

When selected, you will be asked to enter the volume to be pumped. A sample will then be taken as if it is to be *placed into a container outside the sampler base*. Do this by removing the pump tubing from the bulkhead fitting. See *Grab Samples* on page 4-14. A GRAB SAMPLE event will be logged.

Pump Tube Alarm

If the pump tube is changed, this option should be selected to reset the pump counts on the counter. This will remove the "WARNING: REPLACE PUMP TUBING" message that may appear while the program is running. A PUMP TUBE REPLACED message is logged. See Replacing The Pump Tube in Chapter 7, Maintenance.

Calibrate Volume

When selected, you will be asked to enter the volume to be pumped. A sample will then be taken as if it is to be *placed into a container outside the sampler base*. Do this by removing the pump tubing from the bulkhead fitting.

After the sample has been pumped, you will then be asked to enter the amount actually delivered. Once you have entered the delivered volume and accepted the calibration, a VOLUME DELIVERED event will be logged.

Cal/Adj Parameters

When the sampler is configured for operation with a module, this option becomes available. Selecting this option will display the appropriate level adjustment screens and/or the calibration screens. If the level is adjusted, an ADJUSTED LEVEL event is logged. If a parameter is calibrated, an appropriate event is logged.

Calibrating a parameter probe will temporarily "turn off" the partition data storage and the sample enable/disable functions. These functions are disabled during the calibration and for five minutes after the program is resumed. During this time, parameter data normally collected at the data storage interval will be logged as a 252 error message.

Adjust Pacing

This option is available when the running program is paced by Time, Flow Pulses or Flow Volume. If you select this option, you are asked to enter a new pacing interval. The sampler logs an INTERVAL CHANGED event.

The original pacing interval continues to count down until you return the sampler to the running program (select RESUME PROGRAM). If the new pacing interval is less than the original count remaining, the new interval is used.

If the original count remaining is less than the new pacing interval, the original count will continue to count down to the next sample event. Subsequent samples are then paced by the new interval.

Adjust Volume

Select this option to change the sample volume within the limits of the currently programmed sample distribution. If you change a sample volume, a VOLUME CHANGED event is logged.

Power Used

The 6712 has a "fuel gauge" that gives an indication of power usage. The controller keeps track of how much power has been consumed since the last time it lost power. If the controller is powered by an external battery, this fuel gauge can help you estimate the condition of the battery.

Keep in mind that the sampler has no idea as to how much charge was originally stored in the battery (or even if a battery is being used), and therefore has no idea as to the *remaining capacity* of its power source.

Other Functions Menu

```
RUN PROGRAM
VIEW REPORT
OTHER FUNCTIONS
```

• Select OTHER FUNCTIONS.

```
MAINTENANCE
MANUAL FUNCTIONS
PROGRAMMING STYLE
```

OTHER FUNCTIONS

In Standard Programming, the "Other Functions" menu screen includes options for:

- Maintenance (see Chapter 7).
- Manual Functions (see next section).
- Programming Style (see Chapter 3).

MANUAL FUNCTIONS

The manual functions programming screens let you:

- Take grab samples.
- Calibrate sample volumes.
- Operate the pump manually.
- Move the distributor arm.

GRAB SAMPLES

Grab samples let you take a single sample on demand, collecting the sample in an external container (Figure 4.4). Keep in mind:

- When the sampler delivers a grab sample, it runs through a complete sampling cycle, using the current settings for volume and for line rinses or retries. If it is a two-part program, the sampler uses the settings for part A.
- To take a grab sample while the sampler is running a program, you must interrupt the program by pressing the Stop key. Restart the program by running it again.

Taking a Grab Sample

1 | GRAB SAMPLE
CALIBRATE VOLUME
OPERATE PUMP
MOVE DISTRIBUTOR

- Select GRAB SAMPLE

2 | SAMPLE VOLUME:
___ ml (10-9990)

- Enter the desired volume

3 | GRAB SAMPLE
PRESS ↵ WHEN READY!

4 | PURGING
SUCTION LINE

5 | PUMPING 200 ml

6 | PURGING
SUCTION LINE

7 | GRAB SAMPLE
CALIBRATE VOLUME
OPERATE PUMP
MOVE DISTRIBUTOR

- Press stop to return to main menu

To take a grab sample:

1. Disconnect the pump tube from the bulkhead fitting.
2. Place the end of the tube over a collection container.
3. Follow the steps in *Taking a Grab Sample* in the margin.
4. Reconnect the pump tube to the bulkhead fitting.

Figure 4.4 Taking a grab sample

Calibrating Sample Volumes

1
```
RUN
PROGRAM
VIEW REPORT
OTHER FUNCTIONS
```
• Select OTHER FUNCTIONS

2
```
MAINTENANCE
MANUAL FUNCTIONS
MODULE
HARDWARE
```
• Select MANUAL FUNCTIONS

3
```
GRAB SAMPLE
CALIBRATE VOLUME
OPERATE PUMP
MOVE DISTRIBUTOR
```
• Select CALIBRATE VOLUME

4
```
SAMPLE VOLUME:
___ ml (10-9990)
```
• Enter the desired volume

5
```
CALIBRATE VOLUME
PRESS ↵ WHEN READY!
```

6
```
PURGING
SUCTION LINE
```

7
```
PUMPING 200 ml
```

8
```
PURGING
SUCTION LINE
```

9
```
VOLUME DELIVERED:
____ml
```
• Measure the volume delivered and enter the amount here.

10
```
200 ml
ARE YOU SURE?
YES NO
```
This screen appears when the amount you entered in step 9 was more than twice, or less than half, the programmed volume.

• Select YES when the volume delivered matches the volume displayed on this screen.
• Select NO to enter the volume delivered.

CALIBRATE VOLUME

The sampler delivers accurate sample volumes without calibration. If you find that sample volumes vary significantly from the programmed values, first check the suction line for proper installation. Be sure it slopes continuously downhill to the liquid source and drains completely after each sampling cycle. Then, compare the actual length of the suction line to the suction line length settings in the program to see that they match. Also check the pump tube for excessive wear and replace it if necessary.

You may want to calibrate when:

- A new pump tube is installed. Run the pump for five minutes before calibrating.
- The sample source is above the sampler.
- Sampling from pressurized lines (15 PSI Maximum).

Calibration Tips

- For the best results, calibrate the sampler after it's installed on site.
- Use a graduated cylinder for volume measurement.
- The sampler clears the previous calibration setting when you reinitialize the sampler.
- You cannot calibrate while the sampler is running a program.
- When the sampler delivers the sample, it runs through a complete sampling cycle, using the current settings for volume line rinses and retries. If it is a two part program, the sampler uses the volume setting for part A.

To calibrate:

1. Disconnect the pump tube from the bulkhead fitting.
2. Place the end of the tube over a collection container.
3. Follow the steps in *Calibrating Sample Volumes* in the margin.
4. Reconnect the pump tube to the bulkhead fitting.

OPERATING THE PUMP

Operating the Pump

GRAB SAMPLE
CALIBRATE VOLUME
OPERATE PUMP
MOVE DISTRIBUTOR

SELECT DIRECTION
PUMP FORWARD
PUMP REVERSE

PURGING. . .
PRESS THE RED 'STOP'
KEY WHEN DONE

PURGED ____COUNTS

You can manually operate the sampler's pump in the forward or reverse direction. You can do this to test the pump, draw a large sample, or purge the suction line.

When you run the pump manually, the sampler reports the number of pump counts during the pump's operation. Use this feature to obtain an estimate of the pump counts required to purge a nonstandard suction line.

You can also manually run the pump from the main menu. Press the "1" key and then ↵ (Enter) to run the pump in reverse. Press the "3" key and then ↵ (Enter) to run the pump forward.

⚠ CAUTION

TESTS INDICATE THAT THE PUMP PRODUCES SOUND LEVELS IN EXCESS OF 85DB AT ONE METER. PROLONGED EXPOSURE TO THIS SOUND LEVEL COULD RESULT IN HEARING LOSS AND REQUIRES THE USE OF PROTECTIVE EAR PLUGS.

MOVING THE DISTRIBUTOR ARM

Moving the Distributor Arm

GRAB SAMPLE
CALIBRATE VOLUME
OPERATE PUMP
MOVE DISTRIBUTOR

- Select MOVE DISTRIBUTOR

GO TO BOTTLE ____
(1-MAX)

- Enter the bottle number to which you want to move the distributor

NOW AT BOTTLE ____

The sampler lets you reposition the distributor arm. Use this feature to verify a bottle location when installing a bottle kit. You cannot move the distributor arm while the sampler is running a program.

Always use the steps shown to the left in the margin.

⚠ CAUTION

DO NOT ROTATE THE DISTRIBUTOR ARM MANUALLY; THIS WILL SEVERELY DAMAGE THE DISTRIBUTOR DRIVE GEARS.

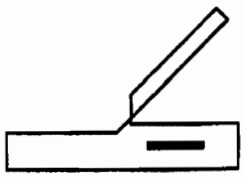

Interrogator

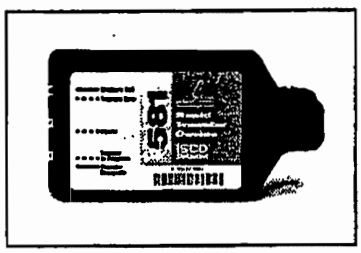

581 RTD

REPORTS

The 6712 records a variety of data while running a sampling program. It uses the data to produce four reports:

- The Program Settings report, listing the program settings.
- The Sampling Results report, listing the program settings, time of samples and other program events.
- The Combined Results report, combining the sample event times with rainfall or module data.
- The Summary report, listing daily summaries of data collected. The Summary report may be rainfall and/or module data.

The sampler stores the data for each report in memory where they remain until you select RUN. Selecting RUN clears the memory so that it can store the data from the next program.

COLLECTING REPORTS

There are a number of ways to collect the reports:

- View reports (program settings, sampling results, and abbreviated summary reports) on the sampler's display.
- Collect the reports (except for summary reports) with an Isco 581 RTD and use a computer running FLOWLINK or SAMPLINK to transfer the reports from the RTD to a file on the computer.
- Collect the reports (except for summary reports) with an IBM PC or compatible computer running FLOWLINK.
- Collect the reports with and IBM PC or compatible computer running SAMPLINK.

Viewing Data

1
```
RUN
PROGRAM
VIEW REPORT
OTHER FUCTIONS
```

- Select VIEW REPORT.

2
```
VIEW DATA
SYSTEM IDs
CONFIGURE REPORTS
```

- Select VIEW DATA.

3
```
SELECT DATA TO VIEW:
SAMPLING REPORT
MODULE DATA
RAINFALL DATA
```

- Select a report or data type.

4
```
VIEW:
DAILY SUMMARY
CURRENT READINGS
```

- Select DAILY SUMMARY to view the stored data, or CURRENT READINGS to view real-time data.

VIEWING THE DATA

Because the display area is small, the data on the reports will be displayed a little differently from the data that is transferred to and viewed on your computer.

- For the Sampling Report, the sampler displays each program event, one at a time.
- For the Module and Rainfall Data reports, it displays daily summaries, instead of the full reports available with the RTD, FLOWLINK, OR SAMPLINK.

If you select SAMPLING REPORT or RAINFALL (step *3* in *Viewing Data*, shown in the margin), the sampler begins displaying the report data. The sampler advances automatically through the report items, displaying each item briefly. While the sampler advances automatically through the displays:

- Stop the automatic displays by pressing Stop once. Then, use the arrow keys to move manually through the report.
- Return to the main menu by pressing Stop twice.

At the end of the report, the sampler leaves the last item displayed until you press:

- the arrow keys to move forward or backward manually through the report.
- Stop to return to the main menu.
- ↵ (Enter) to start the automatic displays again.

If you select MODULE DATA in step 3, the sampler displays the screen shown in step 4. Select the DAILY SUMMARY option and the sampler displays the stored data just as the Sampling Report was described above. Selecting the CURRENT READINGS option causes the sampler to display real-time readings. When there are multiple screens, they will be displayed alternately. You can quickly advance through the screens by pressing an arrow key or ↵ (Enter). Pressing Stop exits the Current Readings mode.

CONFIGURING REPORTS

Configuring Reports

1
```
RUN
PROGRAM
VIEW REPORT
OTHER FUCTIONS
```
• Select VIEW REPORT.

2
```
VIEW DATA
PRINT DATA
SYSTEM IDs
CONFIGURE REPORTS
```
• Select CONFIGURE REPORTS

3
```
SAMPLINK REPORT
FLOWLINK REPORT
CUSTOM REPORT
ALL REPORTS
```
• Select the option that matches your data collection software, or tailor the output according to the reports needed.

The Configure Reports option lets you specify which of the Sampling Reports will be included in any output request. Each sampler is shipped with the option FLOWLINK REPORT selected.

The SAMPLINK REPORT and FLOWLINK REPORT options allow you to tailor the output to the Isco software used to collect the reports. The SAMPLINK REPORT option provides the Sampling Reports; but disables the output of the detailed partition data.

FLOWLINK REPORT provides the Sampling Reports and the detailed partition data. Selecting the FLOWLINK REPORT option enables the output of the detailed partition data so FLOWLINK can add the data to the site's database file.

When you are familiar with the available Sampling Reports, you may want to specify an output containing only the specific data you require. The CUSTOM REPORT option will allow selection of each printed report and of detailed data. Data collection time, printout length, and storage space may be optimized using this option.

SAMPLING RESULTS REPORT

As the sampler runs a program, it records the program's events. Program events include such items as sample events, program enables and disables, power losses, and so on. Table 4.1 lists each event with a short description. You can view the report by following the steps in *Viewing the Data* on page 4-17 or print the log as the Sampling Results report.

In the printed version of the report, sample-event entries include the time of the event as well as the sample and bottle numbers.

The sample column contains the sample number deposited into the bottle. This information reflects the distribution selected for the program.

The letters in the Source columns are codes for the cause of the event. The letters in the Error column are codes for the causes of missed samples. The source and error codes appear with explanations at the end of the report. A list of codes appears in Table 4.1.

The last column in the Sampling Results report records the pump counts for the sample event. Large variations in pump counts from event to event indicate fluctuating heads, a relocated suction line, or a temporarily clogged strainer.

COMBINED RESULTS REPORT

At the time of each sample event, the sampler records the readings from each connected module, rain gauge, or SDI-12 sonde. The Combined Results Report presents the event time, sample and bottle number, and the respective readings from the device.

For flow modules, the readings are level and flow rate. For the pH module, the readings are temperature and pH. For the rain gauge and SDI-12 Sonde, the readings vary according to the selections enabled during the hardware setup in extended programming. When recording four or more sonde parameters, the Combined Results report will exceed the standard 40 character width. To read the additional columns, the data must be collected with Flowlink 4 for Windows software.

The Combined Results report appears in Figure 4.7 .

SUMMARY REPORT

This report summarizes the rain gauge or module data. The types of readings are the same as those available to the Combined reports. The sampler compiles the data to present a daily total, the day's average, maximum, and minimum reading, and a listing of hourly averages. The sampler then graphs the day's readings. Summary reports appear in Figure 4.8 .

Table 4.1 Reports: Program Events, Source Codes, and Error Codes

* Indicates events and codes that occur in Standard Programming

PROGRAM EVENTS (LISTED IN THE ORDER THAT THEY MOST LIKELY WOULD OCCUR)	
*PROGRAM RUN	The sampler ran the sampling program.
*PROGRAM STARTED	The sampler started the sampling program.
*PROGRAM ENABLED (DISABLED)	The sampler was enabled or disabled according to program settings or an external instrument.
'A'/'B' ENABLED (DISABLED)	Program part 'A' or 'B' was enabled or disabled according to the program's settings.
SAMPLE	A sample was taken as programmed. (See Source Codes and Error Codes in this table.)
*SAMPLE SWITCH TIME	A sample was taken at prpogrammed switch time.
*PROGRAM DONE	The sampler finished the sampling program.
'A'/'B' DONE	The sampler finished program part 'A' or 'B'.
*MANUAL PAUSE	Stop was pressed during the program to enter the Manual Paused state.
*PROGRAM STOPPED	You selected Stop from the manual paused options, terminating the program.
*GRAB SAMPLE	A grab sample was taken while in the Manual Paused state.
PUMP TUBE REPLACED	The pump tube alarm was reset while in the Manual Paused state.
CALIBRATE VOLUME	The volume was calibrated.
CALIBRATE SDI PARAMETER	An SDI-12 sonde or module parameter was calibrated.
*ADJUSTED PACING	The pacing interval was changed while in the Manual Paused state.
*VOLUME CHANGED	Sample volume was changed while in the Manual Paused state.
ADJUST ENABLE	Sampler enable thresholds were changed while in the Manual Paused state.
RESET RAIN HISTORY	The rain history was reset.
ADJUST SUCTION HEAD	The suction head was changed while in the Manual Paused state.
*MANUAL RESUME	The resume program option was selected from the Manual Paused state.
PROGRAM PAUSED (RESUMED)	The program reached a programmed pause or resume time.
'A'/'B' PAUSED (RESUMED)	Program part 'A' or 'B' reached a programmed pause or resume time.

Table 4.1 (continued)

*POWER FAILED	The power source was disconnected.
*POWER RESTORED	The power source was reconnected.
ALARM OCCURRED	An alarm occurred.
ALARM ACKNOWLEDGED	An alarm was acknowledged.
*MISSED PASSWORD	The password was missed.

(THE SOURCE AND ERROR CODES LISTED BELOW REFER TO WHY A SAMPLE WAS TAKEN AND WHAT HAPPENED WHILE IT WAS BEING TAKEN.)

SOURCE CODES

*C CALIBRATE SAMPLE	Sample volume delivered during calibration.
*D DISABLE	Sample event at disable time.
*E ENABLE	Sample event at enable time.
EV EVENT	Event-paced sample event.
*F FLOW	Flow-paced sample event.
*G GRAB SAMPLE	Sample volume delivered as a grab sample.
M COMMAND DRIVEN SAMPLE	A command driven sample.
PH PHONE COMMAND	Phone command sample.
R RESUME	Sample event at resume time.
*S START	Sample event at start time.
SW SWITCH TIME	Sample event at switch time.
TO TIME OVERRIDE	Sample event at bottle-switch time.
*T TIME	Time-paced sample event.

ERROR CODES

*DJ DISTRIBUTOR JAMMED	The distributor jammed.
*IP SAMPLE IN PROGRESS	Sample in progress when report was printing.
*L PUMP LATCH OPEN	Unable to take sample because the pump band was opened.
*ND NO DISTRIBUTOR ARM	There is no distributor arm or the stop is damaged.
*NL NO LIQUID DETECTED	The sampler was unable to detect liquid.
LF NOT ENOUGH FLOW	Not enough flow for the minimum sample volume entered for samples with volumes proportional to flow.
*NM NO MORE LIQUID	After the sampler detected liquid and while the sample was being taken, the liquid detector stopped detecting liquid.
M BOTTLE FULL	The composite bottle is full.
*O SAMPLER SHUT OFF	The sampler was turned off with the On-Off key during the sample event.
OV PROBABLE OVERFLOW	The sampler was directed to take a sample that would not fit into the bottle. Occurs for flow paced, time override programs only.
*P POWER FAILED	The power supply failed during the sample event. Note: Power failures during five consecutive sample events results in a LOW BATTERY shut-down.
*PJ PUMP JAMMED	The pump jammed.
*SK SAMPLE SKIPPED	Sample not taken.
*US USER STOPPED	You pressed the Stop key during the sample event.

Figure 4.5 Reports: Program Settings

```
SAMPLER ID# 3687447734  06:32 15-FEB-01
  Hardware: A0       Software: 1.02
*********** PROGRAM SETTINGS ***********
     ----------

 SITE DESCRIPTION:
    "FACTORY051"

     ----------
   UNITS SELECTED:
   FLOW RATE: cfs
 FLOW VOLUME: Mgal

     ----------
   BUBBLER MODULE:
        WEIR
        90
      V-NOTCH
     ----------
  24,  1000 ml BTLS

 10 ft SUCTION LINE

     ----------
      PACING:
    TIME, EVERY
 0 HOURS, 15 MINUTES

     ----------
    DISTRIBUTION:
     SEQUENTIAL


     ----------

   200 ml SAMPLES


     ----------

  5 MINUTE DELAY TO
    FIRST SAMPLE

----------------------------------------
```

Figure 4.6 Report: Sampling Results

```
SAMPLER ID# 3687447734  06:32 15-FEB-01
  Hardware: A0      Software: 1.02
*********** SAMPLING RESULTS ***********
   SITE: FACTORY051
Program Started at 15:03 WE 14-FEB-01
Nominal Sample Volume =  200 ml
                                      COUNT
                                        TO
SAMPLE  BOTTLE TIME  SOURCE ERROR LIQUID
------- ------ ----      -- --    ------
             15:03  PGM ENABLED
  1,1     1   15:03      S           250
  1,1     2   15:18      T           247
  1,1     3   15:33      T           247
  1,1     4   15:48      T           249
  1,1     5   16:03      T           247
  1,1     6   16:18      T           247
  1,1     7   16:33      T           247
  1,1     8   16:48      T           248
  1,1     9   17:03      T           237
  1,1    10   17:18      T           236
  1,1    11   17:33      T           237
  1,1    12   17:48      T           241
  1,1    13   18:03      T           238
  1,1    14   18:18      T           236
  1,1    15   18:33      T           237
  1,1    16   18:48      T           236
  1,1    17   19:03      T           242
  1,1    18   19:18      T           237
  1,1    19   19:33      T           235
  1,1    20   19:48      T           238
  1,1    21   20:03      T           237
  1,1    22   20:18      T           237
  1,1    23   20:33      T           236
  1,1    24   20:48      T           230
             20:48  PGM DONE 14-FEB

   SOURCE S  ==> START
   SOURCE T  ==> TIME
   ----------------------------------------
```

Figure 4.7 Report: Combined Results

```
SAMPLER ID# 3687447734  06:32 15-FEB-01
  Hardware: A0       Software: 1.02
 BUBBLER MODULE: 2215419583
  Hardware: A00000  Software: 1.07
*********** COMBINED RESULTS ***********
   SITE: FACTORY051
Program Started at 15:03 WE 14-FEB-01
Nominal Sample Volume =  200 ml
```

SAMPLE	BOTTLE	TIME	LEVEL ft	FLOW RATE cfs	TOTAL FLOW Mgal
1,1	1	15:03	0.009	2.495	000000.000
1,1	2	15:18	0.012	2.576	000000.017
1,1	3	15:33	0.012	2.666	000000.035
1,1	4	15:48	0.012	2.773	000000.053
1,1	5	16:03	0.012	2.773	000000.072
1,1	6	16:18	0.012	2.798	000000.091
1,1	7	16:33	0.012	2.798	000000.109
1,1	8	16:48	0.012	2.798	000000.128
1,1	9	17:03	0.012	2.751	000000.147
1,1	10	17:18	0.012	2.773	000000.166
1,1	11	17:33	0.009	2.798	000000.185
1,1	12	17:48	0.012	3.728	000000.207
1,1	13	18:03	0.012	3.728	000000.232
1,1	14	18:18	0.012	3.728	000000.257
1,1	15	18:33	0.009	3.728	000000.282
1,1	16	18:48	0.012	5.273	000000.317
1,1	17	19:03	0.012	5.239	000000.353
1,1	18	19:18	0.012	6.651	000000.397
1,1	19	19:33	0.009	6.651	000000.442
1,1	20	19:48	0.009	6.651	000000.486
1,1	21	20:03	0.012	6.651	000000.531
1,1	22	20:18	0.012	6.651	000000.576
1,1	23	20:33	0.009	3.404	000000.612
1,1	24	20:48	0.012	3.425	000000.634

Combined Results (continued)

```
SAMPLER ID# 3687447734  06:32 15-FEB-01
  Hardware: A0      Software: 1.02
*********** COMBINED RESULTS ***********
   SITE: FACTORY051
Program Started at 15:03 WE 14-FEB-01
Nominal Sample Volume =  200 ml
                         FR-TEMP
SAMPLE  BOTTLE TIME          C
------ ------ ----        ----
                     NO FR-TEMPERATURE
----------------------------------------
```

```
SAMPLER ID# 3687447734  06:32 15-FEB-01
  Hardware: A0      Software: 0.01.0127
*********** COMBINED RESULTS ***********
   SITE: FACTORY051
Program Started at 15:03 WE 14-FEB-01
Nominal Sample Volume =  200 ml
SAMPLE  BOTTLE TIME
------- ------ ----------- ------ ----
                     NO RAIN GAUGE
----------------------------------------
```

```
SAMPLER ID# 3687447734  06:32 15-FEB-01
  Hardware: A0      Software: 0.01.0127
SDI-12 DATA
*********** COMBINED RESULTS ***********
   SITE: FACTORY051
Program Started at 15:03 WE 14-FEB-01
Nominal Sample Volume =  200 ml

                     NO SDI-12 SONDE
----------------------------------------
```

Figure 4.8 Report: Summary

```
SAMPLER ID# 3687447734   16:41 15-FEB-01
   Hardware: A0      Software: 1.02
  BUBBLER MODULE: 2215419583
   Hardware: A00000  Software: 1.07
    SITE: FACTORY051

   Summary Report for 15-FEB-01 (TH)
         Day's Flow:     000000.054 Mgal
       Average Flow Rate:      0.4437 cfs
 07:20 Minimum Flow Rate:      0.0237 cfs
 13:25 Maximum Flow Rate:      7.0207 cfs
        Hourly Average Flow Rate:
       00:00-01:00:        NO DATA
       01:00-02:00:        NO DATA
       02:00-03:00:        NO DATA
       03:00-04:00:        NO DATA
       04:00-05:00:        NO DATA
       05:00-06:00:        NO DATA
       06:00-07:00:        NO DATA
       07:00-08:00:        NO DATA
       08:00-09:00:      2.519 cfs
       09:00-10:00:      2.747 cfs
       10:00-11:00:      2.791 cfs
       11:00-12:00:      3.456 cfs
       12:00-13:00:      5.385 cfs
       13:00-14:00:      6.651 cfs
       14:00-15:00:      2.591 cfs
       15:00-16:00:      1.593 cfs
       16:00-17:00:        NO DATA
       17:00-18:00:        NO DATA
       18:00-19:00:        NO DATA
       19:00-20:00:        NO DATA
       20:00-21:00:        NO DATA
       21:00-22:00:        NO DATA
       22:00-23:00:        NO DATA
       23:00-24:00:        NO DATA

             *---+---+---+---+---+---+*
       8.00  +                       +
             I                       I
             I                       I
             I            #          I
             I            #          I
       6.00  +            #          +
             I            #          I
             I           ##          I
             I           ##          I
             I           ##          I
       4.00  +           ##          +
             I          ###          I
             I          ###          I
             I        #####          I
             I       #######         I
       2.00  +       #######         +
             I       #######         I
             I       ########        I
             I       ########        I
             I       ########        I
       0.00  +       ########        +
             *---+---+---+---+---+---+*
 Hour Ending:       08:     16:     24:
             Units are 'cfs'
```

SYSTEM IDs

System IDs

In addition to viewing report data and configuring reports, the View Report option on the main menu lets you view system identification information.

The sampler reports the sampler model number, ID (identification number), and software version number as system identification notes. The sampler also reports the same information for an attached module.

The model and ID numbers remain unchanged through the life of the sampler. The ID numbers appear on the sampler's reports and in files created by FLOWLINK and SAMPLINK when they interrogate the sampler. The software packages use the ID number to make sure that data from different samplers is not combined in the same file.

The software version number changes when your sampler's software is updated.

The system will also list any software options that you have activated on your unit. These specialized software options are available for purchase from Isco and are discussed in Chapter 8.

```
RUN
PROGRAM
VIEW REPORT
OTHER FUNCTIONS
```

• Select VIEW REPORT.

```
VIEW DATA
SYSTEM IDs
CONFIGURE REPORTS
```

• Select SYSTEM IDs.

```
SAMPLER
6712 ID _____
HARDWARE: __
SOFTWARE: __
```

• Displayed briefly

```
[MODULE TYPE]
[MODEL #] ID: _____
HARDWARE: __
SOFTWARE: __
```

• Displayed briefly

```
SOFTWARE OPTIONS
[Options List]
```

• Press STOP to return to the main menu.

CAUTION

Most Isco accessories and interfacing equipment are not certified for us in hazardous locations as defined by the National Electrical Code. Check applicable guidelines, codes, and regulations of federal, state, city, and county agencies. Refer to Appendix C in the back of this manual for more safety information.

PROGRAMMING FOR 700 SERIES MODULES

The bay on the controller's side accepts any of Isco's 700 Series Modules. These modules are optional accessories that are not required for operation of the 6712. However, the modules offer an economical way to combine flow-rate or parameter monitoring with sampling.

The programming of these modules is integrated with the programming of the sampler, so attachment of a module will cause different screens to be displayed, depending on the type of module and the selections you make while programming.

Two modules that are commonly used are the 730 Bubbler Module, which monitors a flow stream's level and flow rate, and the 750 Area Velocity Module for monitoring a flow stream's level, velocity, and flow rate. The following sets of screens give you an example of what screens you might see while programming the sampler and module. Refer to Example 2 (which does not have a module attached) at the beginning of this chapter to compare the sequence of screen displays.

Example 4.3 Programming Example With a 730 Bubbler Module Attached

1	MODULE INSERTED--- STORED DATA WILL BE LOST! OK? YES NO	With the sampler off, insert the module in the bay on the controller. Turn the sampler on by pressing the On/Off key. Press ↵ (Enter). This screen appears. Indicate if you want to lose any stored data.
2	6712 SAMPLER STANDARD PROGRAMMING For HELP at any screen press ? key.	You will then advance to this screen. This screen disappears on its own after 8 seconds.

3	RUN **PROGRAM** VIEW REPORT OTHER FUNCTIONS	The option PROGRAM will be blinking. Press ↵ (Enter).
4	SITE DESCRIPTION: "FACTORY051" CHANGE? YES **NO**	The option NO will be blinking. Press ↵ (Enter). For the purposes of this example, it isn't necessary to change the description.
5	SELECT UNITS FOR FLOW RATE: **cfs** gps gpm Mgd lps m3s m3h m3d	Select the desired units for the flow rate. For this example, choose cfs. Press ↵ (Enter).
6	SELECT UNITS FOR FLOW VOLUME: cf gal **Mgal** m3 lit	Select the desired units for the flow volume. For this example, choose Mgal. Press ↵ (Enter).
7	PROGRAM MODULE? **YES** NO	Select YES to program the module.
8	MODE OF OPERATION: FLOWMETER LEVEL ONLY	If you choose Flowmeter, proceed to screen #9 below. If you choose Level Only, proceed to screen #12.
9	FLOW CONVERSION: **WEIR** FLUME DATA POINTS MANNING FLOW-INSERT	When you select Flowmeter, you will have several options for performing the flow conversion. For this example, choose Weir. Press ↵ (Enter).
10	**V-NOTCH** RECTANGULAR CIPOLLETTI	For this example, choose V-Notch. Press ↵ (Enter).
11	V-NOTCH WEIR ANGLE: 120 **90** 60 45 30 22.5	For this example, choose a Weir angle of 90. Press ↵ (Enter).
12	CURRENT LEVEL IS __.__ ft ADJUST LEVEL TO __.__ ft	The current level will be displayed. Enter an adjustment if needed. If the adjustment is different by more than 0.50 ft, you will be prompted "ARE YOU SURE? YES NO" Choose NO to re-enter; select YES if correct. Press ↵ (Enter).
13	NUMBER OF BOTTLES: 1 2 4 8 12 **24**	Select the number of bottles in your bottle kit by pressing either arrow key until the correct number blinks. Press ↵ (Enter). For this example, select 24.
14	BOTTLE VOLUME IS 1000 ml (300-30000)	Type the volume for the bottles in your kit. For this example, 1000 is correct, so simply press ↵ (Enter).
15	SUCTION LINE LENGTH IS 10 ft (3-99)	Type the length of the suction line, then press ↵ (Enter). If you change the length, the sampler will display a message, "PLEASE WAIT!. . . GENERATING PUMP TABLES."

16	TIME PACED **FLOW PACED**	Select FLOW PACED. If the module is being used as a flowmeter, you will see screen #17a. If the module is being used for level only, you will see screen #17b.
17a	FLOW BETWEEN SAMPLE EVENTS: **0.075 Mgal** (0.001 - 99999)	If the module is being used as a flowmeter, choose the amount of flow between sample events.
17b	FLOW BETWEEN SAMPLE EVENTS: **2** PULSES (1-9999)	If the module is being used for level only, enter the number of pulses between sample events.
18	SEQUENTIAL **BOTTLES/SAMPLE** SAMPLES/BOTTLE	Select BOTTLES/SAMPLE.
19	**2** BOTTLES PER SAMPLE EVENT (1-24)	Enter 2.
20	RUN CONTINUOUSLY? YES **NO**	Select NO.
21	SAMPLE VOLUME: **250** ml (10-1000)	Enter 250.
22	NO DELAY TO START DELAYED START **CLOCK TIME**	Select CLOCK TIME.
23	START FLOW COUNT AT: 06:00	Enter 6, then enter 0. This is the time at which the sampler will start the pacing countdown.
24	SELECT DAYS: SU **MO** TU **WE** TH **FR** SA DONE	Select MO, WE, and FR. Use the arrow keys and ↵ (Enter) to select MO, WE, and FR. When the correct days are blinking, select DONE and press ↵ (Enter).
25	PROGRAMMING COMPLETE RUN THIS PROGRAM NOW? YES **NO**	Select NO.

Example 4.4 Programming Example With a 750 Area Velocity Module Attached

1	MODULE INSERTED-- STORED DATA WILL BE LOST! OK? **YES** NO	With the sampler off, insert the module in the bay on the controller. Turn the sampler on by pressing the On/Off key. Press ↵ (Enter). This screen appears. Indicate if you want to lose any stored data.
2	6712 SAMPLER STANDARD PROGRAMMING For HELP at any screen press ? key.	You will then advance to this screen. This screen disappears on its own after 8 seconds.
3	RUN **PROGRAM** VIEW REPORT OTHER FUNCTIONS	The option PROGRAM will be blinking. Press ↵ (Enter).
4	SITE DESCRIPTION: "FACTORY051" CHANGE? YES **NO**	The option NO will be blinking. Press ↵ (Enter). For the purposes of this example, it isn't necessary to change the description.
5	SELECT UNITS FOR FLOW RATE: **cfs** gps gpm Mgd lps m3s m3h m3d	Select the desired units for the flow rate. For this example, choose cfs. Press ↵ (Enter).
6	SELECT UNITS FOR FLOW VOLUME: cf gal **Mgal** m3 lit.	Select the desired units for the flow volume. For this example, choose Mgal. Press ↵ (Enter).
7	SELECT UNITS FOR VELOCITY: **fps** mps	Select the desired units for the flow velocity. For this example, choose fps. Press ↵ (Enter).
8	PROGRAM MODULE? **YES** NO	Select YES to program the module.
9	MODE OF OPERATION: **FLOWMETER** LEVEL AND VELOCITY	The 750 can have two different modes of operation: Flowmeter or Level and Velocity. For this example, choose Flowmeter. Press ↵ (Enter).
10	FLOW CALCULATION: **AREA * VELOCITY** LEVEL TO FLOW RATE	When you select Flowmeter, you will have two options for performing the flow conversion: Area * Velocity or Level to Flow Rate. For this example, choose Area * Velocity. Press ↵ (Enter).
11	LEVEL TO AREA: **CHANNEL SHAPE** DATA POINTS	For this example, choose Channel Shape. Press ↵ (Enter).
12	**ROUND PIPE** U-CHANNEL RECTANGULAR CHANNEL TRAPEZOIDAL CHANNEL	For the channel shape, select Round Pipe. Press ↵ (Enter).

13	ROUND PIPE DIAMETER = 2.00 ft	Enter the diameter of the round pipe. Press ↵ (Enter).
14	CURRENT LEVEL IS _._ ft ADJUST LEVEL TO _._ ft	The current level will be displayed. Enter an adjustment if needed. If the adjustment is different by more than 0.50 ft, you will be prompted "ARE YOU SURE? YES NO" Choose NO to re-enter; select YES if correct. Press ↵ (Enter).
15	ZERO LEVEL OFFSET: _._ ft	Enter the amount of zero level offset. Press ↵ (Enter).
16	MAXIMUM DEPTH FOR VELOCITY MEASUREMENT 2" 3" 4"	(This screen is applicable for standard sized probes only.) Select the maximum depth for the velocity measurement. Press ↵ (Enter).
17	NUMBER OF BOTTLES: 1 2 4 8 12 24	Select the number of bottles in your bottle kit by pressing either arrow key until the correct number blinks. Press ↵ (Enter).

From this point forward, the screens will the same as in Example 3.

Chapter 5 Extended Programming

Chapter Contents

- *Changing to and From Extended and Standard Screens*
- *One-part and Two-part Programs*
- *Storage For Extended Programs*
- *Programming For 700 Series Modules*
- *Programming SDI-12 Sondes*
- *Programming Examples*
- *Suction Head*
- *Rinses and Retries*
- *Pacing*
- *Distribution*
- *Sampler Enable*
- *Pauses / Resumes*
- *Running Programs*
- *Other Functions*
- *Memory*
- *Command Driven Operation*

The 6712 Sampler has two sets of programming screens. The first set, called standard programming screens, lets you set up typical sampling programs easily and efficiently. The second set, extended programming screens, lets you create sophisticated programs for complex sampling applications.

All of the sampling features available with standard programming screens, discussed in Chapter 4, are available with extended programming screens. However, the extended screens provide several additional features and some screen display differences which are discussed in this chapter. The menu flowcharts for both sets of programming screens are in *Appendix A, Menu Flowcharts*.

NOTE: This chapter assumes that you have read, and are familiar with, the instructions in Chapter 4, Standard Programming!

EXTENDED AND STANDARD MODE

The sampler is shipped so that it defaults to the standard programming mode when you first turn the sampler on. The start-up screen tells you which programming mode the sampler is currently using. You can switch between programming modes by entering a numerical command at the main menu:

- At the main menu type **6712.2** to enter extended programming mode.
- At the main menu type **6712.1** to enter standard programming mode.

```
RUN "EXTENDED 1"
PROGRAM
VIEW REPORT
OTHER FUNCTIONS
```

Main Menu for Extended

ONE-PART AND TWO-PART PROGRAMS

Extended programming lets you set up a "one-part" program or a "two-part" program. One-part programs let you fill *all* bottles of the tub with one set of pacing, distribution, and enable settings. Two-part programs add an additional set of extended pacing, distribution, and enable screens to the sampling program. Each set of screens is called a program part. The program parts are simply called part 'A' and part 'B'. Both parts share the program settings for suction-line length, suction head, and rinses and retries. They also share one start-time setting.

Each part has its own group of bottles. Because settings for each part are independent of each other, the sampler, when running a two-part program, fills each bottle group as if they were being filled by two different programs. Two-part programs finish when both parts are done.

Two-part programming is ideal for sampling storm events. Many storm-water run-off monitoring permits require a first-flush grab sample within the first 30 minutes of the storm event and flow-paced samples during the remainder of the event. With a two-part program, you can set up part 'A' for the first-flush sample and part 'B' for the remainder. Example 5.2 shows a storm-water sampling program.

STORAGE FOR EXTENDED PROGRAMS

About Stored Programs

After selecting a stored program, review the settings with the quick view screens. Each sampling program stores all the settings required by the sampler to run a program. These settings include the bottle-kit information (number of bottles and the bottle volume), the suction-line length, the site description, start times, and so on.

If you use the same program at two sites — each requiring different bottle configurations, suction line lengths, or other details — always check these settings before running a program. You may need to make minor changes to the program to make sure the settings match your equipment.

The sampler stores five sampling programs: one standard and four extended. Program storage eliminates the need to reprogram the sampler with frequently used settings. This feature is especially useful for complex extended programs such as two-part programs or programs with many nonuniform-time settings.

Isco ships the sampler to you with factory programs that you can modify to suit your own needs. All four extended programs are identical to each other.

The stored programs will also save your 700 Series Module program settings and any sampler enable conditions using rain gauge data or SDI-12 sonde parameters. These program settings remain as long as you do not change the type of module, or change the rain gauge or SDI-12 Hardware Setup.

Selecting a Stored Program

When the sampler is in extended programming mode, it always has one current and three noncurrent programs, each occupying a permanent location in memory. The first time you access the extended mode, the current program is "EXTENDED 1," one of the factory extended programs. The name of the current extended program appears in quotations on the first line of the main menu.

The factory programs are named "EXTENDED 1," "EXTENDED 2," "EXTENDED 3," and "EXTENDED 4." You can rename them with more descriptive names, making them easier to identify. The program name is one of the extended program's settings.

The current program is the program you see when you select PROGRAM from the main menu and page through the programming screens. It is the program the sampler uses when you select RUN from the main menu.

You cannot delete programs, but you can modify them as often as necessary. To run a program with different settings without losing the settings in your current program, select a stored program and modify its settings.

For example, assume you have been running the current program, named "EXTENDED 1," at site A for several weeks. This program contains all the settings you need for site A, and you don't want to lose those settings.

Nevertheless, you need another program because you want to move the sampler to site B, so you select "EXTENDED 2" and modify it for site B. The settings in "EXTENDED 1" are preserved automatically. When you return the sampler to site A, you won't need to reprogram the sampler. Merely select "EXTENDED 1" again, double-check the program settings, and run the program. To select an extended program, follow the steps in Example 5.1.

Example 5.1 Selecting a Stored Extended Program

1	6712 SAMPLER, EXTENDED PROGRAMMING For HELP at any screen, press ? key.	Press the On/Off key to turn the sampler on. Press ↵ (Enter) to clear the start-up message. If the words "STANDARD PROGRAMMING" appear on the second line of the start-up message, the sampler is using the standard programming screens. To see the extended screens, type 6712.2 at the main menu shown in step 2.
2	RUN "EXTENDED 1" **PROGRAM** VIEW REPORT OTHER FUNCTIONS	Select PROGRAM from the main menu.
3	PROGRAM NAME: **"EXTENDED 1"** SITE DESCRIPTION: "_____"	Select PROGRAM NAME: "EXTENDED 1" from the quick view menu.
4	**SELECT NEW PROGRAM** CHANGE PROGRAM NAME	Select SELECT NEW PROGRAM to change the program. You can go through QUICK VIEW screens quickly by pressing ↵ (Enter) at each screen. You can also change settings in quick view screens; see *Changing Settings in a Quick View Screen* on page 3-4.
5	"EXTENDED 1" **"EXTENDED 2"** "EXTENDED 3" "EXTENDED 4"	Select the name of the extended program you want to use. Each program's name appears on the same line. If you inadvertently give two programs identical names, you can still identify them by their location on the screen.
	⋮	
6	PROGRAMMING COMPLETE RUN THIS PROGRAM NOW? YES **NO**	To run the program immediately, select YES. To run the program later, select NO.
7	**RUN "EXTENDED 2"** PROGRAM VIEW REPORT OTHER FUNCTIONS	

PROGRAMMING FOR 700 SERIES MODULES

The bay on the controller's side accepts any of Isco's 700 Series Modules. These optional accessories are not required to operate the 6712. However, the modules offer an economical way to combine flow-rate or parameter monitoring with sampling.

The programming of these modules is integrated with the programming of the sampler, so attachment of a module will cause different screens to be displayed, depending on the type of module and the selections you make while programming.

Two modules that are commonly used are the 730 Bubbler Module, which monitors a flow stream's level and flow rate, and the 750 Area Velocity Module for monitoring a flow stream's level, velocity, and flow rate. Chapter 4 contains two examples of programming for modules. Module programming is the same in Extended as it was in Standard programming.

PROGRAMMING SDI-12 SONDES

As an option, the 6712 accepts up to 16 parameters from up to ten sensors with SDI-12 addresses from 0 - 9. The data parameters used by the sonde and sampler must match. Certain vendors' sondes, such as Hydrolab and YSI, have enhanced commands that facilitate "plug and play" setup. These Isco Ready sondes can tell the 6712 what values they have, their order, and units of measure. Other sondes can be used, but require manual setup to identify proper data types for each data value reported.

For more information about programming SDI-12 sondes, refer to Chapter 6.

PROGRAMMING EXAMPLES

In addition to the features available with standard programming, and discussed in Chapter 4, extended programming offers:

- Nonuniform time pacing
- Random interval pacing
- Event pacing
- Multiple bottle compositing
- Time switched bottles or bottle sets
- Programmable sampler enable
- Pauses and resumes
- Two-part programming
- Automatic or user-defined suction head
- Suction line rinses
- Sampling retries

This manual provides several programming examples. Some, demonstrating simple tasks, appear in the margins. Others, demonstrating more complex tasks, appear as examples. Example 5.2 on the following pages steps you through a storm water runoff sampling using extended programming.

Example 5.2 Storm Water Runoff Sampling

Storm water runoff sampling is an ideal application for two-part programming. Typical monitoring permits require that a series of timed samples be taken during the initial portion of the storm event, followed by flow paced samples during the remainder of the event.

Note

To enable the Bubbler Module programming screens, insert the module before turning on the sampler.

This example assumes that a Rain Gauge and a Bubbler Flow Module are connected to the sampler. Using a 24-bottle kit, it divides the bottles into two groups, with six bottles assigned to part 'A' and 18 to part 'B.' The sampler will begin taking samples after being enabled according to programmable enable controls; that is, when the rain gauge detects 0.15 inches of rainfall in 30 minutes, and the module detects a flow stream level of more than 0.25 feet. Because both program parts use the same enable settings, the sampler will enable both parts at the same time. A list of settings for the program follow:

- **Program type:** Extended.
- **Program name:** STORM.
- **Site description:** SITE 54.
- **Units:** Length – Ft, Flow Rate – gpm, Flow Volume – gal
- **Mode of Operation:** Flowmeter, Flow-Insert, Round, 12"
- **Bottle kit:** 24, 1000-milliliter bottles.
- **Suction-line length:** 5 feet.
- **Suction head:** Auto suction head.
- **Line rinses:** None.
- **Sampling retries:** None.
- **Part 'A' and 'B' bottle assignments:** Bottles 1 - 6 to part 'A', bottles 7 - 24 to part 'B'.
- **Part 'A' pacing:** Time pacing, sampling every 5 minutes.
- **Part 'A' distribution:** Sequential, 1 sample per bottle.
- **Part 'A' sample volume:** 800 milliliters.
- **Part 'A' enable:** At least 0.15 inches of rainfall in 30 minutes and a flow stream level of more than 0.25 feet; once enabled, stay enabled, sample taken when the sampler is enabled.
- **Part 'A' pause and resumes:** None.
- **Part 'B' pacing:** Flow pacing, sampling every 2,500 gallons.
- **Part 'B' distribution:** Sequential, 1 sample per bottle.
- **Part 'B' sample volume:** 500 milliliters.
- **Part 'B' enable:** At least 0.15 inches of rainfall in 30 minutes and a flow stream level of more than 0.25 feet; once enabled, stay enabled, no sample taken when the sampler is enabled; first sample taken 20 minutes after the sampler is enabled.
- **Part 'B' pause and resumes:** None.
- **Start time:** Delayed start of 1 minute.
- **730 Bubbler Module:** Installed

Example 5.2 Storm Water Runoff Sampling (continued)

1	6712 SAMPLER EXTENDED PROGRAMMING For HELP at any screen press ? key.	
2	RUN "ISCO 6712" **PROGRAM** VIEW REPORT OTHER FUNCTIONS	Select PROGRAM. Note: If the start-up screen displayed "STANDARD PROGRAMMING", type 6712.2 at this menu before selecting PROGRAM.
3	PROGRAM NAME: "ISCO 6712 " CHANGE? **YES** NO	Select YES. Note: If the quick view screen shows up, press STOP then select OTHER FUNCTIONS, SOFTWARE OPTIONS, QUICKVIEW/CHANGE, NORMAL. Then press STOP and go back to step 2.
4	SELECT NEW PROGRAM **CHANGE PROGRAM NAME**	Select CHANGE PROGRAM NAME.
5	NAME: "**STORM** " ABCDEFGHIJKLMNOPQRST UVWXYZ-& 0123456789 BACK-UP DONE	Enter the word "STORM" for the program name.
6	SITE: DESCRIPTION "FACTORY051" CHANGE? **YES** NO	Select YES.
7	SITE: "**SITE 54** " ABCDEFGHIJKLMNOPQRST UVWXYZ-& 0123456789 BACK-UP DONE	Enter "SITE 54" for the site description.
8	SELECT UNITS FOR LENGTH: **ft** m	Select ft.
9	SELECT UNITS FOR FLOW RATE cfs gps **gpm** Mgd lps m3s m3h m3d	Select gpm.
10	SELECT UNITS FOR FLOW VOLUME cf **gal** Mgal m3 lit	Select gal.
11	PROGRAM MODULE? **YES** NO	Select YES
12	MODE OF OPERATION **FLOWMETER** LEVEL ONLY	Select FLOWMETER
13	FLOW CONVERSION WEIR FLUME DATA POINTS MANNING **FLOW-INSERT**	Select FLOW-INSERT.

Example 5.2 Storm Water Runoff Sampling (continued)

14	WEIR/ORIFICE TYPE V-NOTCH **ROUND**	Select ROUND.
15	FLOW INSERT SIZE: 6" 8" 10" 12"	Select 12.
16	NEW MODULE SETUP-- STORED DATA WILL BE LOST! OK? **YES** NO	Select YES. Note: Partition memory status message will be displayed briefly.
17	CURRENT LEVEL IS ___.___ ft. ADJUST LEVEL TO ___.___ ft.	Press ENTER.
18	DATA STORAGE INTERVAL IN MINUTES 1 2 **5** 10 15 30	Select 5. (If the data storage interval is different than the current progra you will be informed that the storage interval has changed, and that the stored data will be lost. If that is ok, select YES.)
19	NUMBER OF BOTTLES: 1 2 4 8 12 **24**	Select 24.
20	BOTTLE VOLUME IS 1000 ml (300-30000)	Enter 1000.
21	SUCTION LINE LENGTH IS 5 ft (3-99)	Enter 5. The 6712 calculates new pump tables.
22	**AUTO SUCTION HEAD** ENTER HEAD	Select AUTO SUCTION HEAD.
23	0 RINSE CYCLES (0-3)	Enter 0.
24	RETRY UP TO 0 TIMES WHEN SAMPLING (0-3)	Enter 0.
25	ONE-PART PROGRAM **TWO-PART PROGRAM**	Select TWO-PART PROGRAM.
26	24 BOTTLES AVAILABLE ASSIGN BOTTLES 1 THRU 6 TO PART 'A' (1-23)	Enter 6. Screen will say "Beginning Part A" before proceeding with screen 27.

Example 5.2 Storm Water Runoff Sampling (continued)

27	UNIFORM TIME PACED FLOW PACED EVENT PACED NONUNIFORM TIME	Select UNIFORM TIME PACED.
28	TIME BETWEEN SAMPLE EVENTS: 0 HOURS, 5 MINUTES	Enter 0 for hours, 5 for minutes.
29	1 BOTTLES PER SAMPLE EVENT (1- 6)	Enter 1.
30	SWITCH BOTTLES ON: NUMBER OF SAMPLES TIME	Select NUMBER OF SAMPLES.
31	SWITCH BOTTLES EVERY 1 SAMPLES (1-50)	Enter 1.
32	RUN CONTINUOUSLY? YES NO	Select NO.
33	DO YOU WANT SAMPLE VOLUMES DEPENDENT ON FLOW? YES NO	Select NO.
34	SAMPLE VOLUME 800 ml (10-1000)	Enter 800.
35	ENABLE: RAIN LEVEL FLOW NONE	Select RAIN. Note: All valid enable options will appear here, so your screen may differ.
36	ENABLE: RAIN AND OR DONE	Select AND.
37	ENABLE: RAIN AND LEVEL FLOW NONE	Select LEVEL.
38	"RAIN" SET POINT: 0.15 INCHES PER 15 MIN 30 MIN 1 HOUR 2 HOURS	Enter 0.15 for inches, then select 30 minutes.
39	ENABLED WHEN: ABOVE SET POINT BELOW SET POINT	Select ABOVE SET POINT.

Example 5.2 Storm Water Runoff Sampling (continued)

40	RESET RAIN HISTORY? **YES** NO	Select YES.
41	"LEVEL" CONDITION: **SET POINT** RANGE RATE OF CHANGE	Select SET POINT.
42	"LEVEL" SET POINT **0.25 ft** (0.001-30.000)	Enter 0.25.
43	ENABLED WHEN: **ABOVE SET POINT** BELOW SET POINT	Select ABOVE SET POINT.
44	ONCE ENABLED, STAY ENABLED? **YES** NO	Select YES.
45	SAMPLE AT ENABLE? **YES** NO	Select YES.
46	PAUSE RESUME 1. HH:MM DD HH:MM DD 2. HH:MM DD HH:MM DD CLEAR **DONE**	Select DONE. Screen will say "End of Part A" then "Beginning Part B."
47	UNIFORM TIME PACED **FLOW PACED** EVENT PACED NONUNIFORM TIME	Select FLOW PACED.
48	PACED BY: FLOW PULSES **FLOW MODULE VOLUME**	Select FLOW MODULE VOLUME.
49	FLOW BETWEEN SAMPLE EVENTS: 2500 gal (0.001-99999)	Enter 2500.
50	SAMPLE AT START? **YES** NO	Select YES. This will cause the first sample to be taken 20 minutes (the delay to start of sampling specified in Step 67) after the enable for Part B.
51	1 BOTTLES PER SAMPLE EVENT (1- 18)	Enter 1.

Example 5.2 Storm Water Runoff Sampling (continued)

52	SWITCH BOTTLES ON: **NUMBER OF SAMPLES** TIME	Select NUMBER OF SAMPLES.
53	SWITCH BOTTLES EVERY **1 SAMPLES (1- 50)**	Enter 1.
54	RUN CONTINUOUSLY? YES **NO**	Select NO.
55	SAMPLE VOLUME: **500 ml (10-1000)**	Enter 500.
56	ENABLE: **RAIN** LEVEL FLOW 'A' DONE NONE	Select RAIN.
57	ENABLE: RAIN **AND** OR DONE	Select AND.
58	ENABLE: RAIN AND **LEVEL** FLOW 'A' DONE DONE	Select LEVEL.
59	"RAIN" SET POINT: **0.15** INCHES PER 15 MIN **30 MIN** 1 HOUR 2 HOURS	Enter 0.15 for inches, then select 30 minutes.
60	ENABLED WHEN: **ABOVE SET POINT** BELOW SET POINT	Select ABOVE SET POINT.
61	RESET RAIN HISTORY? **YES** NO	Select YES.
62	"LEVEL" CONDITION: **SET POINT** RANGE RATE OF CHANGE	Select SET POINT.
63	"LEVEL" SET POINT **0.25 ft** (0.100-30.000)	Enter 0.25.
64	ONCE ENABLED, STAY ENABLED? **YES** NO	Select YES.

Example 5.2 Storm Water Runoff Sampling (continued)

65	SAMPLE AT ENABLE? YES **NO**	Select NO.
66	START OF SAMPLING AFTER A 20 MINUTE DELAY (1-999)	Enter 20.
67	PAUSE RESUME 1. HH:MM DD HH:MM DD 2. HH:MM DD HH:MM DD CLEAR **DONE**	Select DONE. Screen will say "End of Part B."
68	NO DELAY TO START **DELAYED START** CLOCK TIME	Select DELAYED START.
69	START "STORM" AFTER A 1 MINUTE DELAY (1-999)	Enter 1.
70	PROGRAMMING COMPLETE RUN THIS PROGRAM NOW? YES **NO**	Select NO.

The previous example presented several screens that are not available in standard programming. Descriptions of features available in extended programming follow.

SUCTION HEAD

Suction head is the vertical distance between the surface of the liquid source and the sampler's pump. At each sample event, the sampler determines the suction head automatically.

In extended programming, you can manually enter the suction head if you want. Select ENTER HEAD only when the head remains stable and you can measure it accurately.

Extended Screen for Suction Head Settings

AUTO SUCTION HEAD
ENTER HEAD

If you choose AUTO SUCTION HEAD, the head will be determined for you. If you select ENTER HEAD, the screen below will be displayed so you can enter the suction head.

SUCTION HEAD OF
___ ft
(min - max)

Screens for Line Rinses and Sampling Retries

```
__RINSE CYCLES
(0-3)
```

```
RETRY UP TO __ TIMES
WHEN SAMPLING
(0-3)
```

RINSES AND RETRIES

Rinses and retries are extended programming features. You can program the sampler to rinse the suction line automatically. During a line rinse cycle, the sampler draws liquid through the line to the liquid detector. As soon as it detects liquid, the sampler reverses the pump to purge the line.

The sampling retries feature lets you set the number of times, from 0 to 3, that the sampler tries to detect liquid in the line before skipping the sample.

PACING

Extended Pacing Screen

```
UNIFORM TIME PACE
FLOW PACED
EVENT PACED
NONUNIFORM TIME
```

Sample pacing is the rate at which the sampler takes samples. Depending on the type of pacing you select, the rate is controlled by the sampler's internal clock or by inputs received from connected instruments.

Standard programming provides time pacing and flow pacing, which are described in Chapter 4. Extended programming provides additional pacing types, so its pacing screen (see example at left) has four items listed instead of two.

"Uniform time" pacing is identical to "time" pacing in standard programming. "Flow paced" is the same for both types of programming. Event paced and nonuniform time pacing are described below.

Event Pacing

To program the sampler for event pacing, select EVENT PACED. Refer to Example 5.3 for an example of event paced sampling that uses three event conditions.

Up to fourteen event conditions can be defined (for two-part programs, up to fourteen event conditions can be defined for each part). An event will occur when <u>any</u> of the programmed event conditions becomes true. Each time an event occurs, the sampler takes one sample, placing it in one bottle.

If you have programmed multiple conditions, and more than one condition comes true at the same time (within your measurement interval), one sample will be taken and all conditions that caused the event will be noted on reports.

Although you can combine flow pacing and all time pacing types with any distribution, event paced programs by definition use only sequential distribution. The sampler finishes an event paced program after depositing a sample in each bottle.

Example 5.3 uses **rate of change** for the event condition (see step 7). This feature enables the event condition under specific circumstances.

In the example below, a rate of change is set so that if the level rises more than one foot in a two hour time period, the event condition would be enabled and a sample taken.

In determining if the rise occurs in this example, the sampler looks back at the previous two hour time period to see if there is a rise of more than one foot between any valley (low point) or peak (high point) within that time period.

Once the condition becomes true (a rise of more than one foot is noted), the event condition is enabled. It will not be enabled again unless the condition becomes false, and then true again, within the two hour time window.

In event pacing, up to three different rate of change event conditions can be programmed (for two-part programs, a total of six rate of change event conditions can be defined, three for each part).

Example 5.3 Event Paced Sampling

This example uses a sampler with an attached 730 Bubbler Flow Module, Rain Gauge, and an SDI-12 sonde at address 5 with four parameters.

1	UNIFORM TIME PACED FLOW PACED **EVENT PACED** NONUNIFORM TIME	Select EVENT PACED.
2	EVENT01: RAIN **LEVEL** FLOW TEMP5 pH5 SP_CO5 DO5 DONE	Select the parameters that will trigger the event. Use the arrow keys to move through the parameters. To define the first event for this example, select LEVEL.
3	"LEVEL" CONDITION: **SET POINT** RANGE RATE OF CHANGE	Choose SET POINT.
4	"LEVEL" SET POINT: **1.000 ft** (0.001 - 30.00)	Enter a set point of 1 foot.
5	ENABLED WHEN: **ABOVE SET POINT** BELOW SET POINT	Select ABOVE SET POINT.
6	EVENT02: RAIN **LEVEL** FLOW TEMP5 pH5 SP_CO5 DO5 DONE	Select LEVEL again.
7	"LEVEL" CONDITION: SET POINT RANGE **RATE OF CHANGE**	Choose RATE OF CHANGE.

Example 5.3 Event Paced Sampling (continued)

8	CONDITION IS TRUE WHEN "LEVEL" **RISES** FALLS	Choose RISES. This will enable the event condition if a rise occurs within the time frame and above the amount specified in screen #9.
9	"LEVEL" RISES **1.000 ft** 15 min **30 min** 1 hour **2 hours**	Enter 1 ft and press ↵ (Enter). Then select 2 hours.
10	EVENT03: RAIN LEVEL FLOW TEMP5 **pH5** SP_CO5 DO5 DONE	Select pH.
11	"pH5" CONDITION: SET POINT **RANGE** RATE OF CHANGE	Select RANGE.
12	"pHx" RANGE: LOWER: **4.00** UPPER: **10.00** (0.00 - 14.00)	Enter 4 for the lower range and 10 for the upper range.
13	ENABLED WHEN: **INSIDE RANGE** OUTSIDE RANGE	Choose INSIDE RANGE.
14	EVENT04: RAIN LEVEL FLOW TEMP5 pH5 SP_CO5 DO5 DONE	You will not be entering a fourth event condition, so use the arrow keys to scroll down, and then select DONE.
15	PACING: EVENT PACED 3 EVENT CONDITIONS	Proceed with the rest of the programming steps.

Time Pacing Screens

1
```
NONUNIFORM TIME:
CLOCK TIMES
INTERVALS IN MINUTES
RANDOM INTERVALS
```

CLOCK TIMES

2
```
TAKE SAMPLES AT:
1. START TIME
2. HH:MM
3. HH:MM
```

INTERVALS IN MINUTES

3
```
FIRST SAMPLE AT
START TIME,
THEN . . .
```

4
```
QUANTITY AT INTERVAL
1. __ AT ___ MIN
2. __ AT ___ MIN
3. __ AT ___ MIN
```

RANDOM INTERVALS

5
```
PROGRAM RUN TIME:
__ HOURS, __ MINUTES
```

Nonuniform Time Pacing

The extended time pacing options are uniform time and nonuniform time. "Uniform time" pacing is identical to "time" pacing in standard programming. Nonuniform time pacing uses an irregular interval between sample events; each interval is individually programmable. There are three types of nonuniform time pacing:

- Nonuniform clock time pacing.
- Nonuniform interval pacing.
- Random interval pacing.

Nonuniform Clock Time Pacing

For clock time pacing, enter specific times for each sample event (see screen 2). You can enter as many as 99 clock times, but the interval between times cannot be greater than 24 hours. (Remember to use a 24-hour clock when entering times.) The sampler takes a sample at the start time.

Nonuniform Interval Pacing

For nonuniform interval pacing, enter the number of sample events spaced at intervals of minutes: 12 samples at 5 minute intervals, 6 samples at 10 minute intervals, and so on. The sampler accepts as many as 99 nonuniform interval entries. The sampler takes a sample at start time.

Random Interval Pacing

To program the sampler for random interval pacing, enter the length of time you want to sample. The run time is the only random programming setting you'll need to enter because the sampler derives the number of sample events required for the program from the distribution settings. (You can combine random pacing with any distribution.) Each time you run the program, the sampler generates a new set of random intervals. This makes each sample event unpredictable from run to run.

In both nonuniform clock time pacing and nonuniform interval pacing, the sampler takes a sample at the start time. For random pacing, however, it takes the first sample at the end of the first interval, not at the start time.

DISTRIBUTION

Distribution describes how the sampler is to deposit samples. A sample is the volume of liquid deposited in a bottle. A sample event includes the full sampling cycle and may deposit a sample into more than one bottle. You can program the sampler for five distribution methods:

- Sequential
- Bottles per sample
- Samples per bottle
- Composite
- Multiple Bottle Compositing

Sequential

In sequential distribution, the sampler deposits one sample in each bottle. A sequential sample represents a "snapshot" of the flow stream at a point in time.

Bottles Per Sample

In bottles per sample distribution, the sampler deposits a sample in each of a set of bottles. A bottle set includes at least two bottles but may include all bottles. Use bottles per sample when the volume to be collected is larger than the amount one bottle can hold or when you need identical samples.

Samples Per Bottle

In samples per bottle distribution, the sampler deposits samples from several sample events in a single bottle before moving to the next bottle. Use samples per bottle distribution to collect a series of small composite samples.

Composite

For single bottle configurations, samples per bottle distribution is known as composite sampling. A composite sample represents an average of the flow stream's characteristics during the sampling period.

Multiple Bottle Compositing

Multiple bottle compositing is a combination of bottles-per-sample and samples-per-bottle. At each sample event, the sampler deposits a sample into a set of bottles. It moves to a new bottle set only after each bottle of the first set contains the programmed number of samples. Use multiple-bottle compositing to collect identical sets of composite samples or a composite sample that is larger than the capacity of a single bottle. Multiple bottle compositing is available only in extended programming.

Time Switched Distribution

1 | 2 BOTTLES PER SAMPLE EVENT (1-max)

- Enter the number of bottles that should receive samples at each sample event.

2 | SWITCH BOTTLES ON: NUMBER OF SAMPLES **TIME**

- Select TIME.

3 | SWITCH BOTTLES EVERY __ HOURS, __ MINUTES

- Enter the time between bottle switches.

4 | FIRST SWITCH TIME AT: __:__

- Enter the first bottle switch time.

Time Switching

In extended programming, the sampler offers an additional distribution feature, time switching. This feature determines when the sampler fills the next bottle or bottle set, and may be used with time-paced or flow-paced sample programs. Time switching distribution occurs at regular intervals (as programmed in screen 3 in the margin). The switch times are relative to the programmed "FIRST SWITCH TIME" (screen 4).

Switch times occur regardless of the state of the sampler. Be aware that the sampler may leave empty bottles if it becomes disabled. Pause and resumes are an exception; the sampler will not switch bottles during a pause if the current bottle is empty.

If the program settings instruct the sampler to take a sample at the start time, the sampler also draws a sample at the switch time. When this occurs, the pacing will also be reset at the switch time.

Time switching is normally used with flow-paced programs that do not take a sample at start. These programs will place a sample in the current bottle if it is empty at the switch time, and then move to the next bottle/set. Pacing intervals are reset at every switch time.

When you use the time switching feature, the volume in each bottle or bottle set may vary. Sample volumes that would exceed the bottle capacity are not taken and a "PROBABLE OVERFILL" message is logged.

Continuous Sampling

Sample programs can be run indefinitely by selecting "YES" at the "RUN CONTINUOUSLY?" screen. Continuous sampling resets the distribution when the distribution sequence is complete. That is, when the last bottle/set is reached, the next bottle/set is the first bottle/set. All pacing modes except RANDOM are supported.

When running a program continuously, the bottles must be serviced at regular intervals to prevent overfilling the bottles. The sampler assumes that the next bottle/set is empty and ready to receive samples. If you are using this feature with two-part programming, keep in mind that the parts will most likely reset at different intervals.

Figure 5.1 Sample Distribution

Sequential

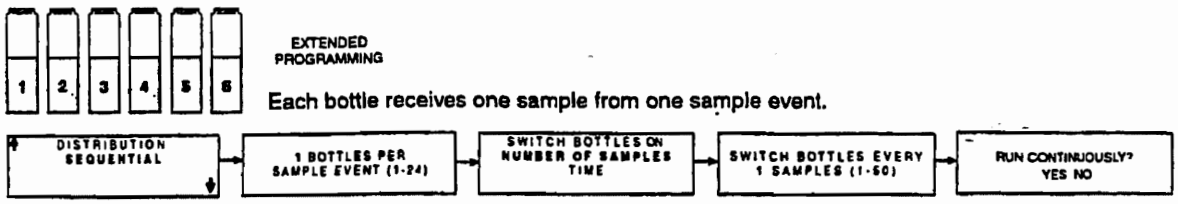

Bottles-per-Sample

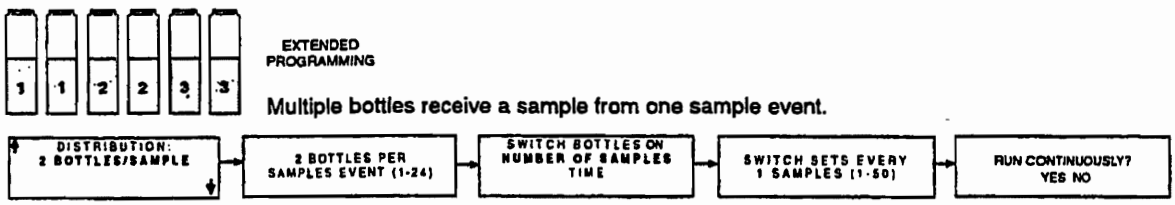

Samples-per-Bottle

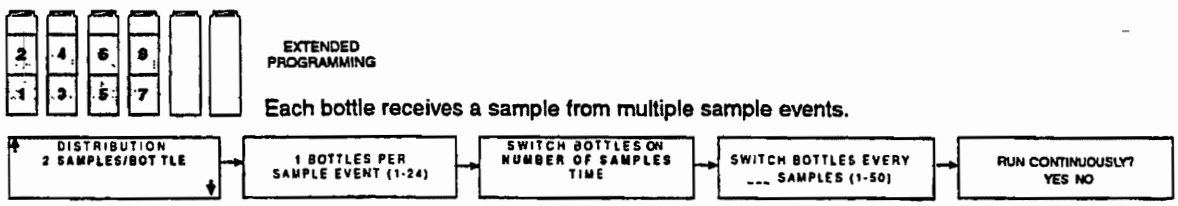

Multiple Bottle Compositing

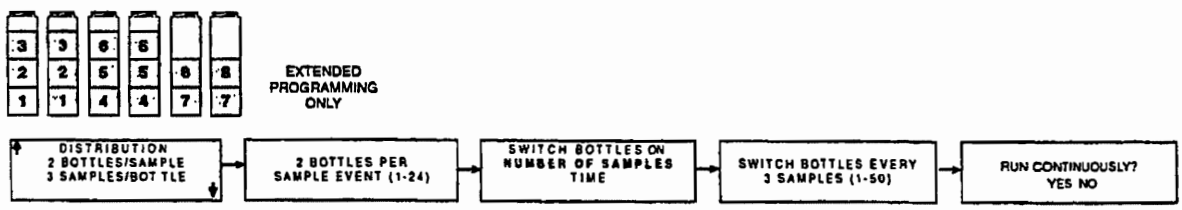

Time Switched (Flow-paced, No sample at start)

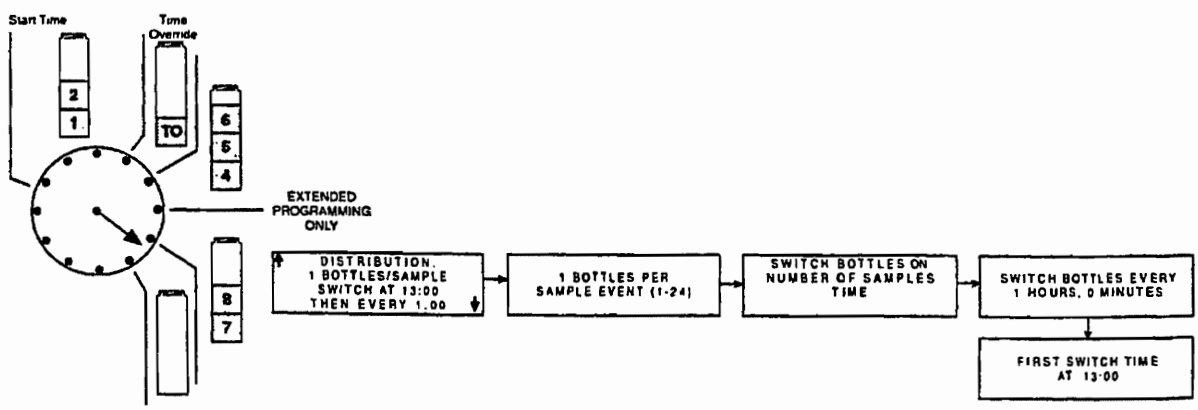

SAMPLER ENABLE

Certain external instruments can enable (start) or disable (stop) a sampler by sending a signal to pin F of the sampler's flow meter connector. Isco flow meters, flow loggers, and the Model 1640 Liquid Level Actuator have a programmable sampler-enable feature that lets them enable or disable the sampler. You can define the condition (such as level, flow-rate, pH, temperature, percent, rainfall, and I/O) or combination of conditions that need to be true in order to enable the sampler. Refer to Flowchart 12 in Appendix A for details on programming sampler enables.

When the sampler detects that it is disabled at start time, it suspends the program until it is enabled. Once enabled, the sampler collects a sample only when programmed to take a sample at the enable time. The diagram in Figure 5.2 shows the sample-response when enabled or disabled at the start time.

Figure 5.2 Start Time Diagram for Sampler Enable Settings

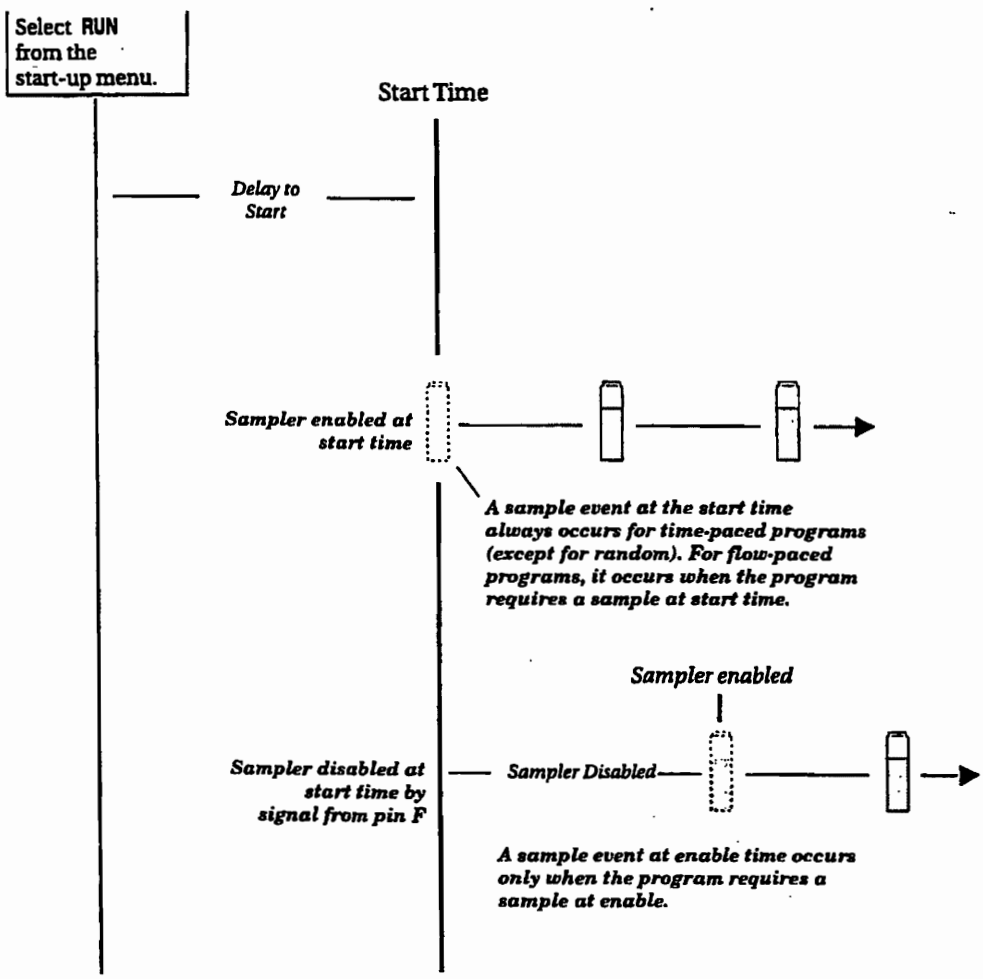

Example 5.4 Sampler Enable

This example uses a sampler with an attached 730 Bubbler Flow Module, Rain Gauge and an SDI-12 sonde at address 5 with four parameters.

1	ENABLE: NONE PROGRAMMED	In this example, you will be enabling the sampler if it rains .5" in 2 hours and the level goes above 1 foot.
2	ENABLE: **RAIN** LEVEL FLOW TEMP5 pH5 SP_CO5 DO5 NONE	Select RAIN.
3	ENABLE: RAIN **AND** OR DONE	Choose AND.
4	ENABLE: RAIN AND **LEVEL** FLOW TEMP5 pH5 SP_CO5 DO5 DONE	Select LEVEL.
5	"RAIN" SET POINT: .5 INCHES PER 15 MIN 30 MIN 1 HOUR **2 HOURS**	Enter .5 for the inches of rain. Press ↵ (Enter). Select 2 HOURS.
6	ENABLED WHEN: **ABOVE SET POINT** BELOW SET POINT	Select ABOVE SET POINT.
7	RESET RAIN HISTORY? **YES** NO	Select YES.
8	"LEVEL" CONDITION **SET POINT** RANGE RATE OF CHANGE	Select SET POINT.
9	"LEVEL" SET POINT: +1 ft (0.001 - 30.00)	Enter 1 foot.
10	ENABLED WHEN: **ABOVE SET POINT** BELOW SET POINT	Select ABOVE SET POINT.
11	ENABLE: RAIN >0.50" / 2:00 AND LEVEL >1.000 ft	Your enable conditions will be summarized on the display. If correct, press ↵ (Enter) to continue. If necessary, make changes to the enable conditions.

SAMPLER ENABLE RESPONSES

In addition to programming enable conditions, extended programming lets you control the sampler's response to its enable state. You can:

- Stay enabled after the first enable.
- Set up a repeatable enable.
- Take a sample at enable or disable.
- Delay the start of sampling after the enable.
- Reset the sampling interval countdown each time the sampler is enabled.
- Control the sampling interval countdown while disabled.
- Enable Part B of a two-part program when Part A is done.

Once Enabled Stay Enabled

```
ONCE ENABLED,
STAY ENABLED?
YES  NO
```

For certain monitoring programs, you may want the sampler to continue to sample, even though the conditions that enabled the sampler no longer exist. When you use the ONCE ENABLED, STAY ENABLED feature, after becoming enabled the sampler takes samples until it reaches the end of its program.

Note

Repeatable enable is called "sampler latching" in flow meters, flow loggers, and FLOWLINK. Latching a sampler produces the same results as selecting YES; the difference is that the external instrument controls the latching.

Repeatable Enable

After enabling the sampler, the enabling instrument (or instruments) continues to monitor the conditions and disables the sampler when the conditions are no longer satisfied. If re-enabled, the sampler resumes the sampling program.

Sample at Enable or Disable

```
SAMPLE AT ENABLE?
YES  NO
```

You have the option of directing the sampler to take a sample as soon as it receives the enable and/or disable signal. If you program the sampler to stay enabled and choose to take a sample at enable, the sample interval will be reset at the enable time. Samples at disable do not affect the sample intervals. Standard programs do not take a sample at the enable time.

Delay To Start Of Sampling

```
START SAMPLING
AFTER A
___ MINUTE DELAY
(1-999)
```

If you have selected ONCE ENABLED STAY ENABLED and have chosen to not sample at the enable, you have the opportunity to suspend the start of sampling. This option is useful for storm programs that require a flow-paced sample taken after the initial grab sample.

Resetting the Sample Interval at Enable

```
RESET SAMPLE
INTERVAL AT ENABLE?
YES  NO
```

If you answer "NO" to the above screen, you will see:

```
CONTINUE COUNTDOWN
WHILE DISABLED?
YES  NO
```

You may want the pacing countdown to start over each time the sampler becomes enabled. To accomplish this, select "YES" when asked if you want to reset the sample interval at enable. The next sample event will occur at the end of a full interval. Furthermore, if the sampler is enabled several times during the program, it resets the countdown each time.

Use the reset-interval feature carefully. For example, avoid resetting the interval when you sample with uniform-time pacing and want to take samples at specific times.

The effects of resetting the interval can be seen in this example: A sampler has been programmed to sample every 15 minutes and to reset the interval when enabled. It receives an enable signal at 10:03 and takes a sample. After resetting the interval, the sampler takes subsequent samples at 10:18 (not 10:15), 10:33 (not 10:30), and so on.

If you select "NO" when asked if you want to reset the sample interval at enable, you will be asked if you want to continue the countdown while disabled. You can have the sampler continue the countdown, repeating it as often as necessary while the sampler is disabled, or you may suspend the countdown while disabled, resuming the countdown as the sampler is enabled. The standard program allows the countdown to continue while disabled.

PAUSES/RESUMES

Pause and Resume Screens

Flowcharts containing the pause and resume screen appear in Appendix A.

Pause and resume settings, available in extended programming, create an intermittent sampling schedule. A program with pauses and resumes begins sampling at its programmed start time, continuing until the first pause time and day of the week. It then suspends sampling until the first resume time, when it begins sampling again. If the start time falls within a pause period, the sampler will not begin sampling until the next resume time. Pause and resumes repeat weekly.

```
PAUSE      RESUME
1. 17:00 MO 08:00 TU
2. 17:00 TU 08:00 WE
CLEAR      DONE
```

You can enter up to nine pairs of pause and resume times. The pause and resume times shown as examples to the left suspend the program between 5:00 p.m. Monday and 8:00 a.m. on Tuesday and between 5:00 p.m. Tuesday and 8:00 a.m. on Wednesday. If the start time is Monday at 8:00 a.m., the sampler takes samples between 8:00 a.m. and 5:00 p.m. Monday; between 8:00 a.m. and 5:00 p.m. Tuesday; and, continues after 8:00 a.m. Wednesday. To remove pause and resume settings from a program, select CLEAR.

```
SAMPLE AT RESUME?
YES  NO
```

A sampler running a pause/resume program resets the pacing interval at each resume time. You can program the sampler to take a sample at resume times (see screen at left).

RUNNING PROGRAMS

To run an extended program, select RUN from the main menu. You may also select YES at the RUN THIS PROGRAM NOW? screen at the end of the programming screens.

Extended programs scheduled to start at a clock time will not start until the programmed clock time on or after the *first valid date*.

Note that if you have recently calibrated a parameter probe, the sampler may delay the start and display "PLEASE WAIT" until valid readings are expected from the probe. The delay accounts for the time typically required to install the probe, and lasts for five minutes after you complete the calibration.

RUN TIME SCREENS

Run time screens, which report the program's status while running a program, are explained in Chapter 4.

INTERRUPTING A RUNNING PROGRAM

Interrupting a running program is also explained in Chapter 4. The scrolling menu that appears during the manual paused state can have two extra options when using extended programming:

Adjust Enable

This option is available for extended sampling programs that have programmed enable conditions. Selecting this option allows you to change the set-points or ranges for the enable conditions. The sampler displays all of the programming screens that define the thresholds of the programmed enables. You cannot change the type of enables used or the way they are combined.

If rain is an enabling condition, you also have the option of resetting the rain history.

Adjust Suction Head

If you have chosen to manually enter the suction head, and are in the manual paused state, the scrolling menu will have an option to adjust the suction head. If you make changes to the suction head value, the sampler logs a CHANGED SUCTION HEAD event.

SAMPLING REPORTS

The 6712 records a variety of data while running a sampling program. Sample reports can be found in Chapter 4.

Chapter 4, Table 4.1, contains a list of source codes and program events that may be recorded when using either standard or extended programming.

OTHER FUNCTIONS

Other Functions Menu

```
RUN "PROGRAM NAME"
PROGRAM
VIEW REPORT
OTHER FUNCTIONS
```

• Select OTHER FUNCTIONS.

```
MAINTENANCE
MANUAL FUNCTIONS
SOFTWARE OPTIONS
HARDWARE
```

In extended programming, the "Other Functions" menu screen includes options for:

- Maintenance (see Chapter 7)
- Manual Functions (see Chapter 4)
- Software Options.
- Hardware

SOFTWARE OPTIONS

The software option screens allow you to set up a number of different software options:

- Liquid Detector Enable
- Normal/Quick View Screens
- Measurement Interval
- Dual Sampler Mode
- Full Bottle Detection
- Display Backlighting
- Event Marks
- Pump Purge Counts
- Serial Output
- Interrogator Connect Power

Liquid Detector Enable/Disable

Liquid Detector

```
USE LIQUID DETECTOR?
YES  NO
```

Under some conditions (pressurized lines, sampling foam), a more repeatable sample volume may be delivered by disabling the liquid detector. Selecting NO will turn the Liquid Detector off.

If the Liquid Detector is off:

- you must enter the SUCTION HEAD,
- no RINSES or RETRIES will be available,
- you will not be able to CALIBRATE SAMPLE volumes,
- the RESULTS report will read a COUNT TO LIQUID of 0,
- a complete purge will occur between samples when using multiple bottles-per-sample distribution.

Programming Style

The sampler has two different styles of programming screens: NORMAL AND QUICK VIEW. These are both explained in Chapter 3.

When you are in extended programming, the default style is QuickView, which allows you to move more quickly through the screens.

If you prefer a step-by-step display for the screens, switch to the Normal setting.

Measurement Interval

Measurement Interval

```
MEASUREMENT INTERVAL
5  15  30  SECONDS
1   2   5  MINUTES
STORAGE INTERVAL
```

If using a 700 Series module or SDI-12 Sonde parameter for enabling, the sampler will request a Measurement Interval. The Measurement Interval allows the sampler to compare the parameter to the enabling conditions at a rate faster than the Data Storage interval. If the Measurement Interval is equal to or greater than the Data Storage interval, the parameter will be checked at the rate of Data Storage interval.

Normally there are two considerations when selecting the Measurement Interval: power consumption and duration of the enabling event. This setting for battery powered samplers will require some degree of balance between the need to conserve power yet detect the enabling event before it has passed.

Dual Sampler Mode

Dual Sampler Mode

```
DUAL SAMPLER MODE?
YES  NO
```

- Select YES to put the sampler in the dual sampler mode. When you no longer need dual samplers, return to this screen to turn the feature off.

Dual Sampler Mode lets you operate two samplers as a pair. The primary sampler disables the secondary one until the primary sampler completes its sampling program. The samplers then reverse roles with the second sampler becoming the primary one.

Setting Up Dual Samplers

1. Turn on the dual sampler mode in both samplers.
2. Install the samplers.
3. Connect the samplers with the Dual Sampler Mode Interconnect Cable by attaching the cable to the sampler's flow-meter connectors. If your installation includes a flow meter or flow logger, use the Dual Sampler Mode to Flow Meter Cable instead.
4. Decide which sampler is to be the primary sampler; the primary sampler should be the sampler with the program you want to run first.
5. Turn the primary sampler on and run its sampling program by selecting RUN. After at least 5 seconds, turn the secondary sampler on and select RUN from its main menu.

How Does It Work?

The primary sampler sends a disable signal out its flow meter connector. The secondary sampler receiving the signal is held disabled until the primary sampler completes its program.

When using a flow meter or flow logger a Dual Sampler Mode to Flow Meter Cable must be used. This cable is constructed so that the pacing instrument receives only the event marks. Therefore, a connected flow meter will not receive a bottle number signal nor will it be able to control the sampler inhibit.

Bottle Full Detection

Bottle Full Detect

```
BOTTLE FULL DETECT?
YES      NO
```

The sampler can detect a full bottle condition when collecting samples in a single bottle (composite sampling). When the sampler detects a full bottle, it stops the sampling routine. A bottle full condition will also stop a sampling routine that is set to RUN CONTINUOUSLY.

The Bottle Full Detect screen allows you to enable or disable this feature. Selecting "YES" enables the sampler to detect a full bottle and stop the sampling routine. Selecting "NO" disables this feature. The Bottle Full Detect setting is part of the sampling program. Because it is a program setting, full bottle detection can be enabled or disabled for each of the four extended programs. If the Bottle Full Detect setting is critical to your sampling program, always check this Software setting after you select a different Extended Program.

This feature relies on a post-purge after each sample. When using the Bottle Full Detect, make sure that postsample purges greater than 100 are used.

Bottle Full Detect is always disabled in the Standard Programming mode.

Display Backlighting

Adjusting the Display Backlighting

BACKLIGHT ALWAYS OFF
TIMED BACKLIGHT
CONTINUOUS BACKLIGHT

The display has a backlight that is adjustable so that the backlight is always off, timed or always on.

In the timed backlight mode the sampler turns the backlight off after detecting no key strokes within 60 seconds. Any keystroke (except ON-OFF) turns the backlighting on again. In this mode the backlight must be on before the sampler accepts a menu choice or number entry. If you press a key and a screen does not respond, it is because the keystroke turned the backlight on.

It is recommended that you use either BACKLIGHT ALWAYS OFF or TIMED BACKLIGHT when using a battery.

Event Marks

Event Marks

EVENT MARK SENT FOR:
EVERY SAMPLE
COMPLETE SAMPLES

The sampler generates an event mark at each sample event, sending it through the flow meter connector to a connected instrument. The event mark may also control an external device; a connected solenoid relay, for example. When using the event mark for a data logger or to control external devices, you may need to adjust the mark by changing the factory settings.

The event mark is adjustable through the software setup screens. You can set up the sampler to generate an event mark for EVERY SAMPLE or for COMPLETE SAMPLES.

If you select COMPLETE SAMPLES, the sampler sends a three-second pulse only after it successfully collects a sample. The sampler will not send an event mark if an error occurs, such as "No Liquid Detected."

If you select EVERY SAMPLE, the sampler will send an event mark every time a sample is initiated. The event mark signal can be a:

- 3-second pulse at the beginning of the presample purge.
- 3-second pulse at the beginning of forward pumping only, marking the time the sampler deposited the sample.
- Variable duration pulse generated during the pump cycle, from the beginning of the presample purge to the end of the postsample purge.
- Variable duration pulse generated only during forward pumping.

Figure 5.3 shows event mark timing diagrams.

Bottle Number

Concurrent with the event mark, the sampler also sends a bottle number signal. The bottle number signal is a series of pulses. The number of pulses sent represents the bottle currently accepting a sample. (See Figure 5.3).

Figure 5.3 Event Mark Timing Diagram

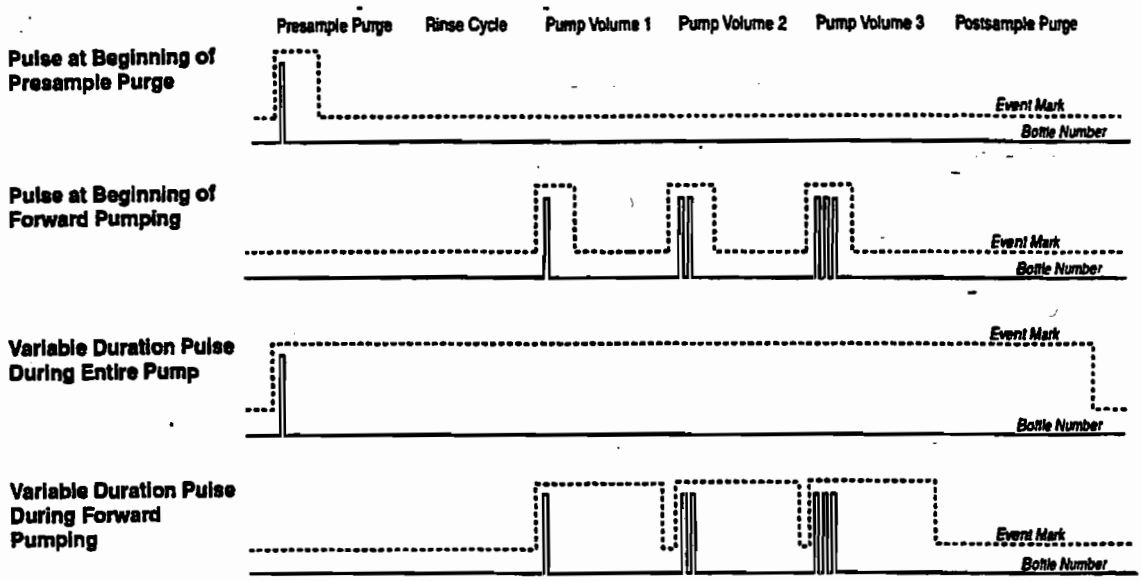

Note: This diagram shows the pulses sent for a bottles-per-sample distribution scheme

Using the Purge-Count screens

PRE-SAMPLE PURGE:
____COUNTS
(10-9999)

POST-SAMPLE PURGE:
DEPENDENT ON HEAD
FIXED COUNT

POST-SAMPLE PURGE:
____COUNTS
(10-9999)

PRESAMPLE AND POSTSAMPLE PURGE COUNTS

The presample purge is when the pump runs in reverse clearing the strainer of any debris before taking a sample. The presample purge is set at 200 pump counts. After the sample is taken a postsample purge occurs to clear the liquid from the suction line. The duration of the postsample purge is determined by the length of the suction line to maximize the battery life. The pre- and postsample purge can also be manually set.

SERIAL OUTPUT

Serial ASCII data can be output through the controller's interrogator port. The output frequency is user-selectable: every 15 seconds, every minute, every 5 minutes, every 15 minutes, or by command.

To receive serial data as a *periodic output*:

1. Select YES at screen asking if you want periodic serial output.
2. Select the appropriate baud rate setting in screen . Note that at all baud rates the data is sent with no parity, eight data bits, and one stop bit. If you have difficulty with the connection, try a slower baud rate.
3. Select the desired output interval in screen.
4. Connect to the 6712 controller's interrogator connector using a standard interrogator cable.

Programming the serial output

```
PERIODIC
SERIAL OUTPUT?
YES  NO
```

```
PORT SETTINGS:
9600N81  4800N81
2400N81  1200N81
```

```
SERIAL OUTPUT EVERY:
15 SEC  1 MIN
5 MIN  15 MIN
```

Note

Connecting either the serial output or the standard interrogator cable to the 6712 disables the optional dial-out modem, if installed. The interrogator cable must be disconnected before you can use the modem.

To receive serial data by *command*:

1. Select NO at the screen asking for periodic serial output .
2. Connect your computer to the 6712 controller's interrogator connector with a standard interrogator cable, P/N 60-2544-040 (25 pin) or 60-2544-044 (9 pin).
3. Configure your communications software for a baud rate no higher than 19,200 kb, no parity, 8 data bits, and 1 stop bit.
4. From the computer's keyboard, type "?" repeatedly until the 6712 controller determines the baud rate. Once the baud rate is known, the 6712 returns an identification banner. This banner indicates that the connection is working properly.
5. Type DATA<CR> each time the data string is desired.

The serial data is in comma-separated-value format. Only the values that the sampler is set up to measure will be output in the data string. The string is terminated with a <CR><LF>. To read the data in the string, refer to Table 5.1.

Table 5.1 Serial Data Codes

IDENTIFIER	PARAMETER	UNITS
B?[1]	BOTTLE NUMBER AND TIME	days since 1-Jan 1900
CR	CURRENT DAY'S RAIN	tips (rolls over every 256 tips)
CS[2]	CHECKSUM	unsigned long
DE	DESCRIPTION	6712 Sampler
FL	FLOW	cubic meters per second
ID	UNIT SPECIFIC IDENTIFIER	10 digit unsigned long
LE	LEVEL	meters
MO	MODEL	6712
PE	PERCENT	percent of full scale
PH	pH	none
PR	PREVIOUS DAY'S RAIN	tips (rolls over every 256 tips)
RA	RAIN	tips (rolls over every 256 tips)
RTE	REFRIGERATOR TEMPERATURE	degrees celsius
SS	SAMPLER ENABLE STATE	logical
TE	TEMPERATURE	degrees celsius
TI	CURRENT TIME	days since 1-Jan-1900
VE	VELOCITY	meters per second
VO	VOLUME	cubic meters
VSI	VELOCITY SIGNAL STRENGTH	percent
VSP	VELOCITY SPECTRUM STRENGTH	percent

CO_a[3]	CONDUCTIVITY	milliseimens per centimeter
DO_a	DISSOLVED OXYGEN	milligrams per liter
PH_a	pH	none
SA_a	SALINITY	parts per thousand
SP_a	SPECIFIC CONDUCTANCE	milliseimens per centimeter
TD_a	TOTAL DISSOLVED SOLIDS	grams per liter
TE_a	TEMPERATURE	degrees Celsius
OR_a	OXIDATION REDUCTION POTENTIAL	millivolts
LE_a	LEVEL	meters
MM_a	AMMONIUM-NITROGEN	milligrams nitrogen per liter
MA_a	AMMONIA-NITROGEN	milligrams nitrogen per liter
NI_a	NITRATE-NITROGEN	milligrams nitrogen per liter
TB_a	TURBIDITY	nephelometric turbidity units
CL_a	CHLORIDE	milligrams per liter
CP_a	CHLOROPHYLL	micrograms per liter
FL_a	FLOW RATE	cubic meters per second
VO_a	FLOW VOLUME	cubic meters
xxD_a[4]	OTHER DATA NOT LISTED ABOVE	

NOTES

1. THE THREE MOST RECENT SAMPLES WILL HAVE ENTRIES AS B?. THE "?" WILL BE THE FIRST BOTTLE NUMBER IN THE SET. IF THE SAMPLE IS A GRAB SAMPLE, IT WILL BE SHOWN AS B0.
2. THE CHECKSUM DOES NOT INCLUDE THE CHECKSUM, CARRIAGE RETURN, AND LINEFEED.
3. AN "a" IN THE IDENTIFIER INDICATES AN SDI-12 ADDRESS.
4. "xx" MATCHES THE DATA LABEL FOR THE SDI-12 PARAMETER.

HARDWARE SETUP

The hardware setup screens make adjustments to the sampler's hardware-based features:

- Rain Gauge Setup
- SDI-12 Sonde Setup
- I/O Pin Programming
- Analog Outputs
- Dialout Alarms

Selecting Hardware Setup

RUN "*PROGRAM NAME*"
PROGRAM
VIEW REPORT
OTHER FUNCTIONS

- Select Other Functions

MAINTENANCE
MANUAL FUNCTIONS
PROGRAMMING STYLE
HARDWARE

- Select Hardware

SDI-12 Sonde Setup

The 6712 supports SDI-12 sondes. For more information on setting up sondes, refer to Chapter 6.

Rain Gauge Setup

With standard programming, the sampler does not record rain gauge readings. However, with extended programming, recording the rain gauge readings and the rain enable option can be turned on or off. Enter the hardware setup and follow the screens to the left in the margin.

Rain Gauge Setup

DO YOU HAVE A
RAIN GAuGE CONNECTED?
YES NO

- Select YES.

RAIN GAUGE:
0.01 inch TIP
0.1 mm TIP

- The rain gauges are set up to tip on either .01 inch or .1 mm. Select the desired tip.

When asked if you have a rain gauge connected, select YES to record the rain gauge readings and add RAIN as a sampler enable option. Select the appropriate tip for the rain gauge. The sampler will then create a rain memory partition and update the available sampler enable conditions.

Select NO to disable the readings and the sampler enable option. When you select NO, the sampler removes the rain memory partition, leaving the memory space available for other reading types.

I/O Pin Programming

Pins C, H, and I on the Rain Gauge Connector are user-configured as I/O1, I/O2, and I/O3 (Input/Output pins) respectively. Each pin can be either an input for sampler enabling, or an output for alarms such as PROGRAM DONE, RUN ERROR, etc. The CONDITIONS I/O output can report alarm conditions using the parameters the 6712 is configured to measure. Similar to the Sampler Enable, you can set thresholds for one or two conditions and the CONDITIONS output can then trigger alarms when the measured parameters exceed the threshold.

Note

The state of the I/O lines is not defined when the sampler is OFF.

Isco offers an I/O module that interfaces the sampler with a large number of non-Isco devices. For more information about the I/O module, contact your sales representative.

Refrigerator Temperature

Isco offers a temperature sensor intended for use with the 6712FR Refrigerated Sampler. The optional sensor connects to the Rain Gauge port and uses I/O3 to transmit its temperature readings to the 6712.

To configure an attached temperature sensor, select "FR-TEMP" as the input for I/O3. The 6712 will display the NEW HARDWARE SETUP screen. Select YES and the 6712 reconfigures its memory partitions to record the temperature readings.

Temperature readings are updated approximately every 2.5 seconds. The readings are stored as FR-TEMP readings at the data storage interval. You can retrieve a history of temperature readings through the 6712's reports. The temperature data also can be used as a sampler enable condition.

Analog Output

Analog Output Screens

Flowcharts for analog output screens appear in Appendix A.

Isco offers multiple analog outputs as a factory installed option. The number of isolated outputs can vary from one to three and is specified at order time. The option is installed inside the controller and includes a six-pin connector to interface with external devices.

The analog outputs can be programmed for either 0-to-20 mA or 4-to-20 mA operation. With the exception of rain, any parameter that the 6712 sampler is currently measuring can be used to control any (or all) of the analog output channels. Programming the outputs requires parameter levels at each end of the analog range and then assumes a linear relationship between those points. MANUAL CONTROL of each output is also available.

Dialout Alarms

Dialout Alarms

```
DIALOUT NUMBERS:
1.
2.
3.
```

- Enter the applicable phone numbers.
- To enter extended characters or a pager number, press the decimal point on the keypad to display the following screen:

```
SELECT CODE:
,  #  *  PAGER
```

- If "PAGER" is selected, a "P" will be displayed in front of the applicable dialout number to indicate the number belongs to a pager.

Dialout alarms require the sampler to be equipped with the factory-installed 2400 baud talking modem. The dialout alarm allows the sampler to notify a contact list when an "alarm" condition exists (is true).

At the transition to the true state, any programmed I/O output can cause the sampler to warn of the alarm condition. As many as three telephone numbers can be entered. The sampler tries each telephone number in succession until the alarm is acknowledged. For each alarm condition, the sampler will attempt each telephone number entered a maximum of five times.

When the call is answered, the sampler's talking modem announces the alarm condition and the sampler's three-digit ID number. To acknowledge the call, press the [*] (star) key, and the three-digit ID number on your phone. The sampler will reply with an acknowledgment when the keyed entry is correct.

A record of alarms and acknowledgements is available in the Sampling Report. When the sampler detects the alarm condition, it records the type of alarm and the time it occurred. Acknowledgements are a separate Sampling Report entry, recording the time and telephone number that responded to the call.

As mentioned previously, as many as three telephone numbers may be entered. Modems with serial numbers 199E00000 and greater can dial up to 25 digits. Enter numbers using the numeric keys on the 6712 keypad. When entering telephone numbers longer than 17 digits, the display will scroll.

Extended characters, the Comma (,), Pound (#), and Star (*), also may be included in the 25 digits. To enter an extended character, press the DECIMAL POINT key on the 6712 keypad. The 6712 displays a screen used to select and enter the extended characters. Each comma entered will cause the modem to pause for two seconds before proceeding with the remaining digits.

Phone numbers that are no longer needed can be removed. Advance the cursor to the end of the telephone number and then press the LEFT ARROW key to erase the preceding character. If the cursor is not at the end of the telephone number, the LEFT ARROW key will only shift the cursor without erasing any characters.

Dialout telephone and pager numbers are included in the Program Settings Report.

Pager Numbers

The extended character screen contains a pager option that designates the phone number as a pager. When programmed as a pager number, an identification string will be sent seven times after the pager number is dialed, with a three second delay between strings.

An example identification string would be "828-1", meaning "Alarm condition #1 exists at sampler 828". If more than one alarm condition exists, the string would read similar to "828-1-3.

MEMORY

The 6712 Sampler contains 512 kilobytes of battery backed RAM (Random Access Memory) that stores:

- Five sampling programs
- The sampling results from the most recent program
- The rainfall data collected from rain gauges
- The data from a refrigerator temperature sensor
- The data collected from a 700 Series module
- Parameter data collected from an SDI-12 Sonde
- Calculated flow information from the current flow module

The sampling results memory stores up to approximately 1004 events (the actual number is dependent on the number of SDI-12 parameters). The program run and start time information is logged as four events. These four entries are held for the duration of the program. The remaining 1000 are for logging sample events, program events, and errors from the currently running program. If the running program exceeds 1000 events, the data will "roll-over." That is, the sampler will replace the oldest stored event with the newest event. When using an SDI-12 sonde, the sampler logs additional entries at each sample event.

Module, sonde, refrigerator temperature, and rain gauge readings are stored in memory partitions. The storage capacity depends on the reading types, the number of bytes per reading, and the data storage interval.

The sampler clears the sampling results memory when the site description changes. It is important to collect the sampling results before changing the site description – the data can not be retrieved afterwards. Keep in mind that the description may change when selecting an extended program.

The partition data is cleared when the sampler automatically creates and sizes the memory partitions. This occurs when you:

- Select a new program with a different storage interval
- Change the Data Storage Interval in the current program
- Change the programming mode
- Install a new 700 Series Module
- Change 700 Series Module mode of operation
- Add or remove a rain gauge with the Hardware Setup
- Add or remove a refrigerator temperature sensor as I/O3
- Add or remove a SDI-12 sonde parameter with the Hardware Setup
- Reinitialize the sampler

If you need to collect sampling results and partition data, do this before allowing the sampler to create and size the partitions. The stored data is lost as the sampler reformats its memory. As a precaution, before clearing the memory, the sampler display will show a message similar to the following. This allows the user to select "NO" and collect the data.

```
INTERVAL CHANGED --
STORED DATA WILL
BE LOST! OK?
YES  NO
```

When YES is selected, the sampler clears the stored data and reformats the memory partitions. The sampler then displays the new capacity of the partition memory.

```
PARTITION MEMORY
WILL LAST 13 DAYS
```

If the duration is too short, try changing the data storage interval or eliminating unnecessary reading types in the Hardware or Module Setup. For example, a sampler configured with a 730 Bubbler Module and a rain gauge storing data at a one-minute interval, creates level and rainfall partitions that hold 100 days of readings. Changing the storage interval to two minutes extends the storage capacity to 201 days.

The sampler does not have to be running a program to store readings. When the sampler is on, it stores readings at the selected data storage interval. Once the partition is filled, the readings roll over.

When the sampler is running a program, the partitions become "triggered" by the programmed start time or the first enable time, whichever is later. A triggered partition continues to log readings at the selected interval, but will not replace any readings taken after the trigger event. The sampler fills the partition

and then stops recording to preserve the data. The first reading preserved in a full partition is one hour before the trigger event. A full partition can be reset by starting another program or changing storage parameters.

If you need continuous readings for analysis, be sure to collect the readings before the partition fills or rolls over to avoid gaps in the data.

PRESSURIZED LINES

The sampler can obtain samples from pressurized lines, as long as the line pressure remains below 15 PSI (pounds per square inch). Pressures greater than 15 PSI may prevent the sampler from purging the suction line; moreover, extreme pressures can force liquid past the pump, even when the pump is not running.

For more consistent sample volumes from lines under constant pressure, calibrate the samples. Isco does not recommend sampling from pressurized lines.

COMMAND DRIVEN OPERATION

The 6712 controller can be used as a slave to an external controller. The external controller is responsible for determining when to take a sample, how much volume to pump, and where to put the sample. The external controller directly interfaces to the sampler via an RS-232 communications port at 2,400-19,200 baud, 8 data bits, no parity, and 1 stop bit. A comma-separated-value protocol is used by the external controller to make requests, and by the sampler to report results. Use a standard computer connect cable (see Appendix E) to connect the sampler's interrogator port and the external controller.

For information on serial data codes and their meanings, refer to Table 6 in the Serial Output section of this chapter.

The 6712 Sampler will respond to two commands: GET STATUS and TAKE SAMPLE. All commands must include the instruction set. The checksum value is optional.

Get Status

There is only one form of this command available:

```
STS,1,CS,581<CR>
```

- "STS,1" instructs the sampler to return the current status
- "CS,581" is the optional checksum value. The byte-by-byte sum of the ASCII values in the string "STS,1,CS" is 581.
- "<CR>" is a carriage return signifying the end of the command.

Take Sample

The TAKE SAMPLE command is only valid if the sampler is WAITING TO SAMPLE. Format the command as follows:

```
BTL,2,SVO,100,CS,1039<CR>
```

- "BTL,2" instructs the sampler to place the sample in bottle 2.
- "SVO,100" instructs the sampler to take a 100 ml sample.
- "CS,1039" is the optional checksum value. The byte-by-byte sum of the ASCII values in the string "BTL,2,SVO,100,CS," is 1039.
- "<CR>" is a carriage return signifying the end of the command.

Command Driven Sampler Responses

The 6712 Sampler's response string is the same for each of the three commands. A sample response string is shown below:

```
MO,6712,ID,2424741493,TI,35523.50000,STS,1,ST
I,35523.41875,BTL,2,SVO,100,SOR,0,CS,xxxx<CR>
```

Note that the sampler's response is a series of alphabetical and numerical pairs. The alphabetical characters are headings that describe the following numerical value or code. A complete description of each pair is listed below.

MO,6712, is the model number of the sampler.

ID,2424741493, is the sampler's unique identification number.

TI,35523.50000, is the sampler's current time.

STS,1, is the sampler's current status. The possible states are:

1 = WAITING TO SAMPLE.

5 = PUMP JAMMED (must be resolved before continuing).

6 = DISTRIBUTOR JAMMED.

9 = SAMPLER OFF.

12 = SAMPLE IN PROGRESS.

20 = INVALID COMMAND. (identifier code not supported)

21 = CHECKSUM MISMATCH.

22 = INVALID BOTTLE. (bottle requested is not in the current configuration)

23 = VOLUME OUT OF RANGE. (the sample volume requested is outside its range (10-9990 ml)

STI,35523.41875, is the most recent sample time.

BTL,2, is the bottle receiving the most recent sample.

SVO,100, is the most recent sample's volume.

SOR,0, is the results of attempting the most recent sample. The possible results are:

0 = SAMPLE OK.

1 = NO LIQUID FOUND.

2 = LIQUID LOST (not enough liquid to satisfy requirements.)

3 = USER STOPPED (using the Stop Key).

4 = POWER FAILED.

5 = PUMP JAMMED.

6 = DISTRIBUTOR JAMMED.

8 = PUMP LATCH OPEN.

9 = SAMPLER SHUT OFF (while sampling).

11 = NO DISTRIBUTOR.

12 = SAMPLE IN PROGRESS.

CS,xxxx is the byte-by-byte sum of the entire string "MO,...,CS,"

For commands that are not understood (INVALID COMMAND or CHECKSUM MISMATCH) or when no samples have been taken, the most recent bottle information is left off the response string.

Chapter 6 SDI-12 Sondes

Chapter Contents

- *SDI-12 Data Parameters*
- *Scanning For Sondes*
- *Isco Ready Sondes*
- *Other SDI-12 Sondes*
- *Sonde Setup - Storing Parameter Data*
- *Sonde Calibration and Validation*
- *Disconnecting Sondes*

WARNING

SDI-12 Sondes have not been approved for use in hazardous locations as defined by the National Electrical Code.

CAUTION

Before you install any sonde, you must take the proper safety precautions. Refer to Appendix C in the back of this manual. Additional safety considerations may be required. Check applicable guidelines, codes, and regulations of federal, state, city, and county agencies.

In order to provide you with the flexibility to use the water parameter sensors that best meet your needs, Isco has implemented support for SDI-12 protocol. Support of this standard allows you to use SDI-12 compatible devices in conjunction with your 6712 sampler in Extended Programming mode.

SDI-12 DATA PARAMETERS

The 6712 Sampler can accept up to 16 parameters from up to ten sensors with SDI-12 addresses from 0 - 9 (refer to chart in Figure 1). This data can be used in different ways. Data can be logged at user selectable time intervals for later download and processing by Isco's Flowlink™ program. You can set up sampling programs that will be enabled to run only if conditions based on parameters monitored by the connected SDI-12 devices are met. The sampler can also be programmed to take samples each time certain parameter limits are exceeded.

The data parameters used by the sensing device (sonde) and recording device (sampler) must match. Otherwise, the equipment could record the data values for one parameter as another's, such as reporting a pH value as being temperature.

Certain vendors' sondes (such as Hydrolab and YSI) have enhanced commands that facilitate "plug and play" setup. These Isco Ready sondes can tell the 6712 what values they have, their order, and units of measure.

Other SDI-12 compatible sondes can be used, but require manual setup to identify proper data types for each data value reported.

This chapter shows you how to set up both Isco Ready and other SDI-12 sondes for use with the 6712.

Figure 6.1 SDI-12 Sonde Parameters

SDI-12 Sonde Data Units:	Parameter	Range	Resolution	Storage Bytes
	Temperature	-40 - 100 °C	0.1 °C	2
	Conductivity	0 - 100 mS/cm	0.01 mS/cm	2
	Specific Conductance	0 - 100 mS/cm	0.01 mS/cm	2
	Total Dissolved Solids	0 - 90 g/l	0.01 g/l	2
	Salinity	0 - 70 ppt	0.1 ppt	2
	Dissolved Oxygen	0 - 20 mg/l	0.1 mg/l	1
	pH	0 - 14	0.1	1
	ORP	-999 - 999 mv	0.1 mv	2
	Level	0 - 6.5279 m	0.0001 m	2
	Ammonium-Nitrogen	0 - 200 mgN/l	0.1 mgN/l	2
	Ammonia-Nitrogen	0 - 200 mgN/l	0.1 mgN/l	2
	Nitrate-Nitrogen	0 - 200mgN/l	0.1 mgN/l	2
	Turbidity	0 - 1000 NTU	0.1 NTU	2
	Chloride	0 - 1000 mg/l	0.1 mg/l	2
	Chlorophyll	0-400 ug/l	0.1 ug/l	2
	Other	-99999.0-99999.0	0.0001	4

SCANNING FOR SONDES

You must be in Extended Programming to use a sonde with the 6712. The sampler can automatically scan for the presence of sondes if you enable that option:

- From the main menu, select Other Functions.
- Select Hardware.
- As you press ↵ (Enter) to move through the hardware screens, you will see one that looks like the following:

```
↑  NO SDI-12 SONDE
   AUTO SDI-12 SCAN OFF
                      ↓
```

Select "NO SDI-12 SONDE" to scan for sondes. If one is found, you can set it up, and the "AUTO SDI-12 SCAN" option will be switched to YES.

Select the "AUTO SDI-12 SCAN" option to manually turn on (or off) automatic scanning for sondes when the sampler is turned on.

If a sonde has already been connected and set up, the hardware screen will instead display a screen similar to the following:

```
↑  SDI-12 DATA:
   TEMP0 pH0 SD_CO0
   SAL0 05DATA0 DO0
   ORP0 LEVEL0 09DATA0  ↓
```

Press the arrow keys until "SDI-12 DATA" is blinking, then press ↵ (Enter). You will see the screen below:

```
↑  NO SDI-12 SONDE
   SETUP KNOWN SONDES
   SCAN SDI-12 SONDES
                      ↓
```

Select "SCAN SDI-12 SONDES" and press ↵ (Enter). The system will scan to see what sondes are connected. If it detects a different sonde, it will indicate so, and advance to the setup screens.

Connecting an Isco Ready Sonde

1
```
SELECT ADDRESS OF
SONDE TO SETUP:
__ __ DONE
```

- Select the address you want to set up.

2
```
Company Model
Optional Information
SONDE AT ADDRESS __
HAS __ DATA VALUES
```

- Wait a few seconds for the above display to disappear, or press ↵ (Enter).
- You will then be asked if you want to store the parameter data. Refer to "SONDE SETUP - STORING PARAMETER DATA" on page 6-3.

ISCO READY SONDES

If the 6712 scans for sondes and finds one that is Isco Ready, it will automatically recognize the sonde's data types and units. You can then use Hardware options to setup the definitions for data storage and calibrate the sonde.

Even with an Isco Ready sonde, the 6712 may find a parameter that is not on its list of supported parameters (Figure 6.1). It can still work with such a parameter. Such a parameter will be identified as something like "05DATA1" and you will have to mentally associate the appropriate data type with that label. However, once such data is brought into Flowlink™, data sets can be manually changed so that reports show the appropriate labels.

Connecting Other SDI-12 Sondes

1
```
SELECT ADDRESS OF
SONDE TO SETUP:
__ __ DONE
```

- Select the address of the sonde you want to set up.

2
```
Company Model
Optional Information
SONDE AT ADDRESS __
HAS __ DATA VALUES
```

- You can wait a few seconds, or press ↵ (Enter) to advance to the next screen:

3
```
DATA FROM SONDE __
 1 = OTHER
 2 = OTHER
 3 = OTHER          -->
```

- Press an arrow key until the cursor is on the data you want to identify. Then, press ↵ (Enter). A scrolling screen listing possible parameters will appear.

4
```
   SONDE __ ,   DATA 1:
<--  pH
     TEMPERATURE (°C)
     TEMPERATURE (°F)   -->
```

- Make your selection and press ↵ (Enter).

5
```
   DATA FROM SONDE __
<--  1 = TEMPERATURE(°C)
     2 = OTHER
     3 = OTHER          -->
```

- Repeat the process until you have defined all the data. Press "DONE" when finished.

6
```
   DATA FROM SONDE __
<--  4 = pH
     5 = LEVEL
          DONE
```

- You will then be asked if you want to store the parameter data. Refer to "SONDE SETUP - STORING PARAMETER DATA" on this page.

OTHER SDI-12 SONDES

If you have connected an SDI-12 sonde that is not Isco Ready, you will need to define the sonde's data values.

When you select the address of the sonde you want to set up (see screens in the margin), the company model and other information will be displayed along with the number of data values the sonde has.

When you advance to the next screen (see #3 in the margin), the data types will be listed as "other" because you have not defined them yet. Move between the data types using the arrow keys. Select one to change by pressing ↵ (Enter).

A list of possible parameters will be displayed (screen #4). Use the arrow keys to move through the options. When the one you want is blinking, press ↵ (Enter). Repeat the process until you have defined all of the data parameters for your sonde.

Use the arrow key to move to "DONE" and press ↵ (Enter). You will then be asked if you want to store the parameter data.

SONDE SETUP - STORING PARAMETER DATA

Whether you are using an Isco Ready sonde or other SDI-12 compatible sonde, you will need to tell the 6712 if you want to store all of the parameter data or data from selected parameters.

Data is stored in memory partitions. A fixed amount of memory is available to store data. If you are using some parameters to simply trigger an event or enable condition, it is not necessary to store the data.

If all the parameters' data will fit in memory, you will be asked if you want to store all of the parameter data. Answering "NO" will still allow you to selectively store parameter data; otherwise, all data will be stored.

You will be asked to store parameter data during the setup process. You can also manually change the setup using options in the Hardware menu.

To access the setup option in the Hardware menu, select Other Function from the main menu, then choose Hardware. Advance through the screens until you see one that displays SDI-12 DATA. Select this screen to display the following:

```
NO SDI-12 SONDE
SETUP KNOWN SONDES
SCAN SDI-12 SONDES
```

Select "SETUP KNOWN SONDES" and then indicate the address of the sonde you want to setup. A screen containing the sonde model and number of data values will appear briefly. Then you will be asked to verify, parameter by parameter, what data you want to store. The screens will look similar to the one below:

```
SONDE 5, STORE
TEMPERATURE DATA?
YES NO
LABEL IS: TEMP5
```

Indicate if you want to store the data for that particular parameter and then advance through the rest of the parameter screens. Once you have defined your data storage options, select "DONE."

You will be prompted that you have entered a new hardware setup and asked if you want to erase the stored data. Indicate "YES" or "NO." A partition memory status message will be displayed and (if a parameter exists that can be calibrated) you will then advance to the calibration screen (refer to "SONDE CALIBRATION AND VALIDATION" on this page). If you do not want to calibrate or validate, press "DONE" to return to the Hardware options screens.

SONDE CALIBRATION AND VALIDATION

It is recommended that calibration of your sonde be done in the lab, according to manufacturer's recommendations. However, for your convenience, the 6712 allows for field calibration of pH, Dissolved Oxygen (DO), and Oxidation Reduction Potential (ORP).

Field calibrations are stored in the sampler, NOT the sonde, and are used to modify readings from the sonde until a new sonde is connected. When a sonde is moved to another sampler, it will retain calibration constants set in the lab, but will not retain any that were set in the field.

Although field calibration is limited to three parameters, you can validate any of the available parameters. Validation allows you to immerse the sonde in a known solution, note the readings, and see if the sonde is functioning properly. The validation process does not modify any readings like calibration does; it merely alerts you to inaccurate ones.

No data will be stored, nor will enable conditions be updated, while calibrations or validations are being performed.

The Calibration Screens

To access the calibration screens from the main menu, select Other Functions, Hardware. Advance through the screens until you see one that displays "SDI-12 DATA." Select this screen to display the following:

```
NO SDI-12 SONDE
SETUP KNOWN SONDES
SCAN SDI-12 SONDES
```

Select "SETUP KNOWN SONDES" and then select "DONE." You will see a screen similar to the following that will list the parameters you can calibrate.

```
SELECT PARAMETER
TO CALIBRATE:
pH5 DO5 ORP5 DONE
```

The sonde's address will appear after the parameter (such as pH0 and pH5). If you have multiple sondes attached, use the arrow key to select the correct one to calibrate.

Depending upon the parameter you selected, a series of screens will be displayed to step you through the calibration process.

- pH - You will be given the choice of three different pH solutions: 4.00, 7.00, and 10.00. After making your selection, rinse the probe and place in the pH buffer. If the reading is off by more than 0.5 pH units, you will asked to verify if the reading is correct.
- DO - For dissolved oxygen, you can choose between two methods: DO Standard and Saturation. The saturation method requires a temperature reading between 0.0 and 47.0 °C. You will also need to enter your altitude and barometric pressure.
- ORP - You will asked to enter the value of your calibration standard.

When calibration is complete, select "DONE" to proceed to the validation screen. If you do not want to validate any parameters, select "DONE" again to return to the Hardware options screens.

The Validation Screen

The validation screen appears after you select "DONE" on the calibration screen. It will be similar to the screen shown below.

```
SELECT PARAMETER
TO VALIDATE:
<--    SAL5   05DATA5  DO5
  ORP5   LEVEL5        -->
```

Use the arrow keys to select the desired parameter to validate. Any parameter can be validated. You will be prompted to place the probe in your validation standard. When stable, press ↵ (Enter). The reading will be displayed at the bottom of the screen.

When you are done validating, select "DONE" to return to the Hardware options screens.

DISCONNECTING SONDES

When you have disconnected all sondes, and have interrogated the sampler for all its data, you can indicate that there is no SDI-12 sonde.

From the main menu, select Other Functions, Hardware. Advance through the screens until you see one that displays "SDI-12 DATA." Select this screen to display the following:

```
NO SDI-12 SONDE
SETUP KNOWN SONDES
SCAN SDI-12 SONDES
```

Select "NO SDI-12 SONDE." You will advised that you have a new hardware setup:

```
NEW HARDWARE SETUP--
STORED DATA WILL
BE LOST!  OK?
YES  NO
```

If you have collected all the data, select "YES." A partition memory message will be displayed briefly, and you will be returned to the Hardware options screens.

If you do not have a sonde attached, you may want to turn off automatic scanning for sondes. This will eliminate the time taken to scan for sondes whenever the sampler is turned on.

Chapter 7 Maintenance

Chapter Contents

- *Maintenance Screens*
- *Set Clock*
- *Diagnostics*
- *Maintenance Checklist*
- *Cleaning Guidelines*
- *Cleaning Protocols for Priority Pollutants*
- *Replacing the Pump Tube*
- *Checklist for Replacing Pump Tube*
- *Pump Tube Alarm*
- *Opening the Controller Case*
- *Recharging the Desiccant*
- *Replacing the Internal Battery*

This chapter describes how to maintain and troubleshoot your 6712 sampler. If you think your unit requires repair, or if you have questions concerning its operation or maintenance, contact Isco's Technical Service Department:

Phone: (800) 228-4373
(402) 464-0231
FAX: (402) 465-3022

E-mail: service @isco.com

MAINTENANCE CHECKLIST

- Inspect the pump tube for wear. Replace it if necessary.
- Clean the pump tubing housing.
- Change the suction line if necessary.
- Clean the bottles, suction line, strainer and pump tube.
- Check the humidity indicator.
- When the battery warning appears on the display, replace the controller's internal battery.

CLEANING GUIDELINES

Controller, Top Cover, Center Section, Retaining Ring, and Tub

Clean the top cover, center section, retaining ring, and tub with warm soapy water or by spraying them with a hose. Avoid using a high-pressure hose to clean the controller, especially around the control panel. Extreme pressures may force water past the control-panel seal.

When cleaning the controller and top cover, cap the connectors at the back of the controller tightly. Keep a power source connected to the power-source connector, or replace the protective cap (shipped with the sampler) over the power source connector, to protect the pins from moisture damage. Make sure the pump drain hole (located on the bottom right-hand side of the pump, beneath the pump band) is open and free of debris or buildup.

Sample Bottles

The sample bottles have a wide mouth to facilitate cleaning. Wash them with a brush and soapy water, or use a dishwasher. You can autoclave the glass bottles.

Suction Line, Pump Tube, and Discharge Tube

Clean the suction line, pump tube, and discharge tube by placing the end of the suction line in a cleaning solution and pumping it through the delivery system. Rinse with clean water. If these items are severely contaminated, discard them. For critical sampling applications, refer to *Cleaning Protocols for Priority Pollutants* on the next page.

Strainer

Clean the strainer with a brush and soapy water.

CLEANING PROTOCOLS FOR PRIORITY POLLUTANTS

Clean sampling equipment is essential for valid laboratory analysis. Isco recommends that you develop cleaning protocols in consultation with a laboratory analyst when designing the monitoring program. For example, to clean sample bottles, suction line, and pump tubes, Lair (1974) suggests these protocols used by USEPA Region IV Surveillance and Analysis field personnel engaged in NPDES compliance monitoring. The protocols are based on U.S. Environmental Protection Agency Publications EPA-600/4-77-039 (*Sampling of Water and Wastewater* by Dr. Phillip E. Shelley).

Isco Glass Sample Bottles

1. One spectro-grade acetone rinse.
2. Dishwasher cycle (wash and tap water rinse, no detergent).
3. Acid wash with at least 20 percent hydrochloric acid.
4. Dishwasher cycle (wash and tap water rinse, no detergent).
5. Replace in covered Isco tubs.

Vinyl Suction Line

1. Use new suction line for each new sampling setup, therefore, no cleaning is required.
2. Use Teflon suction line when sampling for organic compounds.

Note

For critical sampling applications, consider replacing the suction line, pump tube, and discharge tube. Replacement eliminates the possibility of any cross contamination from previous sampling sites.

Teflon Suction Line

1. Rinse twice with spectro-grade acetone.
2. Rinse thoroughly with hot tap water using a brush, if possible, to remove particulate matter and surface film.
3. Rinse thoroughly three times with tap water.
4. Acid wash with at least 20 percent hydrochloric acid.
5. Rinse thoroughly three times with tap water.
6. Rinse thoroughly three times with distilled water.
7. Rinse thoroughly with petroleum ether and dry by pulling air through the line.
8. Dry overnight in a warm oven (use an oven temperature of lower than 150 degrees F), if possible.
9. Cap ends with aluminum foil.

Isco Pump Tube

1. Rinse by pumping hot tap water through the tube for at least 2 minutes.
2. Acid wash the tube by pumping at least a 20 percent solution of hydrochloric acid through the tube for at least 2 minutes.
3. Rinse by pumping hot tap water through the tube for at least 2 minutes.
4. Rinse by pumping distilled water through the tube for at least 2 minutes.

MAINTENANCE SCREENS

When you select Other Functions from the main menu, and then select Maintenance, the following screen will be displayed:

```
SET CLOCK
PUMP TUBE ALARM
INTERNAL BATTERY
DIAGNOSTICS
```

Using these options, you can set the sampler's time and date, set the number of pump counts for the pump tube warning, reset the battery warning for the internal battery, and run a set of diagnostic tests for troubleshooting purposes.

SET CLOCK

Isco ships samplers from the factory with the clocks set to the correct Central Standard Time. Reset the clock when installing the sampler in a different time zone, for daylight savings time, or when needed.

Entering Times and Dates

```
ENTER TIME AND DATE:
HH:MM  DD-MON-YY
__:__  __-__-__
```

- Move from one field to another by pressing the arrow keys.
- Change a setting in a field by typing a number. Press ↵ (Enter) to accept the new setting.

When setting the clock and calendar, use a 24-hour clock for times and the day-month-year format for dates. The illustration at the left shows blanks for each position that accepts an entry. The positions are called fields. When this screen appears on *your* sampler, the fields will contain the sampler's current settings for the time and date.

- To move from one field to another without changing the setting, press the arrow keys. Use this technique when you want to change only one or two settings.
- Change the setting by typing a new number. Press ↵ (Enter) to accept the new setting.

For example, to enter 2:00 p.m. (2:00 p.m is 14:00 on a 24-hour clock), type 14. Press ↵ (Enter). Next, type 0 (zero) for the minutes, and press ↵ (Enter). To enter a date, such as January 22, 2001, type: 22 ↵ 01 ↵ 01 ↵.

Setting the Clock and Calendar

1	RUN PROGRAM VIEW REPORT **OTHER FUNCTIONS**	Select OTHER FUNCTIONS.
2	**MAINTENANCE** MANUAL FUNCTIONS PROGRAMMING STYLE	Select MAINTENANCE.
3	**SET CLOCK** PUMP TUBE ALARM INTERNAL BATTERY DIAGNOSTICS	Select SET CLOCK.

4	ENTER TIME AND DATE: HH:MM DD-MON-YY 14:00 22-JAN-01	Enter the time and date.
5	SET CLOCK PUMP TUBE ALARM INTERNAL BATTERY DIAGNOSTICS	Press Stop to return to the main menu.

PUMP TUBE ALARM

The sampler tracks the pump counts in both the forward and reverse cycles with a resettable counter. When the counter reaches the default count of 1,000,000 or the count you have entered, the sampler displays a message, "WARNING! REPLACE PUMP TUBE." The message appears each time you turn the sampler on or run a program until you reset the counter.

After replacing the pump tube (see page 7-7), reset the count to zero so the sampler can begin tallying the pump counts for the new tube. Replacing the pump tube does not reset the counter.

Experience may suggest a significantly different pump tube life. You can change the alarm count to represent the pump tube life for your application. The example below shows how to set the alarm count and reset the pump counts.

1	RUN PROGRAM VIEW REPORT **OTHER FUNCTIONS**	Select OTHER FUNCTIONS.
2	**MAINTENANCE** MANUAL FUNCTIONS PROGRAMMING STYLE HARDWARE	Select MAINTENANCE.
3	SET CLOCK **PUMP TUBE ALARM** INTERNAL BATTERY DIAGNOSTICS	Select PUMP TUBE ALARM.
4	1024000 PUMP COUNTS, WARNING AT 1000000	The sampler displays this screen briefly to give you the current pump-count information. The first line shows you the pump counts tallied since the counter was last reset. The second line shows the current alarm setting.
5	1024000 PUMP COUNTS, RESET PUMP COUNTER? **YES** NO	To reset the counter to zero, select YES. Always reset the counter after replacing a pump tube. Select NO when merely checking the current count.
6	WARNING AT 1000000 PUMP COUNTS (1 - 99)00000)	If necessary, change the pump-count alarm setting by typing the first two digits of the new setting. The sampler accepts entries between 1 and 99. For example, to increase the count to 1,500,000, enter 15.
7	SET CLOCK PUMP TUBE ALARM INTERNAL BATTERY DIAGNOSTICS	Press Stop to return to the main menu.

INTERNAL BATTERY WARNING

A lithium battery housed inside the controller maintains power to the sampler's memory when the controller is disconnected from a power source. If it discharges completely, the sampler will lose all program settings and all data stored in memory when the external power source is disconnected. The battery requires replacement every five years. The sampler displays a warning within one month of its expected life to alert you to the battery's impending expiration. The warning appears each time you turn the sampler on until you reset the alarm. When you reset the alarm, the sampler resets the warning to a date 59 months from the current date.

1	RUN PROGRAM VIEW REPORT **OTHER FUNCTIONS**	Select OTHER FUNCTIONS.
2	**MAINTENANCE** MANUAL FUNCTIONS PROGRAMMING STYLE HARDWARE	Select MAINTENANCE.
3	SET CLOCK PUMP TUBE ALARM **INTERNAL BATTERY** DIAGNOSTICS	Select INTERNAL BATTERY.
4	WARNING! REPLACE INTERNAL BATTERY BEFORE 17-OCT-97	The sampler displays this screen briefly to show you the expiration date.
5	DID YOU REPLACE THE INTERNAL BATTERY? YES NO	After replacing the battery, select YES. Select NO only if checking the expiration date. Resetting the alarm directs the sampler to calculate a new expiration date, five years in the future. If you reset the alarm without replacing the battery, the sampler will not be able to alert you to the battery's impending expiration.
6	SET CLOCK PUMP TUBE ALARM INTERNAL BATTERY DIAGNOSTICS	Press Stop to return to the main menu.

DIAGNOSTICS

The sampler has several self-diagnostic tests that check the memory (both the RAM and ROM), pump, and the distributor arm position. It also contains screens that let you reset the sampler's program settings and memory to factory settings.

You do not need to run the diagnostic tests on a routine basis. The diagnostic tests are a troubleshooting tool; Isco's Customer Service department staff may ask you to run these tests when they work with you in diagnosing problems with your sampler.

Access the diagnostic screens by selecting Other Functions from the main menu, then Maintenance, and Diagnostics. The unit will automatically test the memory and display; you can choose whether it tests the pump and distributor, and whether it reinitializes the unit to its original factory settings.

1 PLEASE WAIT!
... 'RAM' PASSED TEST

2 PLEASE WAIT!
... 'ROM' PASSED TEST

- If RAM or ROM fails the test, the sampler will report that 'RAM' (or 'ROM') FAILED TEST. Contact Isco's Customer Service for assistance.

3
```
ABCDEFGHIJKLMNOPQRST
ABCDEFGHIJKLMNOPQRST
ABCDEFGHIJKLMNOPQRST
ABCDEFGHIJKLMNOPQRST
```

4 TEST PUMP?
YES NO

5 PUMPING ...

6 PUMPING ...
ON/OFF RATIO = _.__

7 PURGING ...

8 PURGING ...
ON/OFF RATIO = _.__

9 TEST DISTRIBUTOR
YES NO

10 FINDING ARM FLEXURE

11 NOW AT BOTTLE __

12 RE-INITIALIZE?
YES NO

Memory Test

Screens 1 and 2 at left show you the diagnostic tests for the unit's memory. If either screen shows you a message saying that the memory failed the test, contact Isco's Customer Service.

Display Test

Screen 3 shows you the display test. You should see the test pattern illustrated in the screen. If the pattern does not match the illustration, the display or its circuitry require repair.

Pump Test

Screen 4 lets you start the pump test by selecting YES. As the sampler runs the test, it first runs the pump forward for a short period. Next, it displays an ON/OFF ratio number. After displaying the forward pumping ratio, the sampler reverses the pump to obtain a purge ratio. The acceptable range is between 0.80 and 1.25. If either ratio is outside the acceptable range, the pump requires repair. You do not need to pump liquid while running the test, and you can run the test with or without a tube in the pump.

CAUTION

Tests indicate that the pump produces sound levels in excess of 85db at one meter. Prolonged exposure to this sound level could result in hearing loss and requires the use of protective ear plugs.

Distributor Test

The distributor test is provided for factory personnel to verify the distributor's position as it rotates through the 24 positions. (screens 9 through 11). The distributor arm flexes slightly when it contacts the stop, and the sampler measures this flexure. The sampler uses this measurement to position the arm accurately over each bottle.

Reinitialize Controller

The sampler allows you to reset all the program settings to the settings shipped with the sampler (screen 12). Reinitializing also clears the memory that stores the sampler's event log and module data. **Use this option cautiously.**

REPLACING THE PUMP TUBE

Replace the pump tube only with Isco's 6712 pump tubing. **Other pump tubes will not work.** The 6712 pump tubing is easily recognized by the blue alignment collars.

Improper pump tubes include those made for Isco's other samplers (3700, GLS, etc.) and tubing available from non-Isco vendors. Also note that the discharge tube is not the same as the pump tube. You could experience several problems if you install the wrong pump tubing:

- The sampler will not pump the liquid.
- Pump jams
- Inaccurate sample volumes
- Faulty liquid detection

Inspect the pump tube periodically. Replace the tube when it cracks or appears worn. Inspect the tube frequently when the sample liquid contains a high percentage of suspended or abrasive solids.

⚠ CAUTION

The pump's safety lock prevents the sampler from running the pump when the pump band is open. DO NOT tamper with the safety mechanism. The pump is extremely powerful. The pump rollers can injure you severely if the sampler activates the pump while you are working on it or inside it.

Isco recommends that you disconnect power from the sampler before replacing the pump tube.

☑ Note

To extend the pump-tube life:

- Always use Isco pump tubes.
- Install the tube properly, aligning the blue collars correctly in the liquid detector's grooves.
- Follow the natural curve of the tube when wrapping the tube around the pump rollers.
- Minimize the line rinses and sampling retries in the sampling programs.
- Use the shortest possible suction line.

Conditions that shorten tube life:

- Improper installation.
- Abrasive materials suspended in sample liquid.
- Frequent line rinses.
- Long purge cycles, such as those used with long suction lines.

CHECKLIST FOR REPLACING PUMP TUBE

1. Disconnect power from the sampler.
2. Loosen the liquid detector's cover by unscrewing the black knob on top of the detector. Unlatch the pump band. (The band is the rounded metal band that holds the tube in the pump.)
3. Pull the tube away from the bulkhead fitting. Pull it from the pump and detector.
4. Clean the pump rollers and the inside of the pump band.
5. Thread the new tubing through the pump so that the tube follows its natural curve around the pump rollers. You may need to move the pump rollers to make the installation easier.
6. The blue collars on the tube help align the tube in the detector and pump. Align the tube by placing the collars in the grooves inside the liquid detector.
7. Close the detector's cover and tighten the black knob. Close the pump strap and latch it.
8. Reset the pump-tube counter. (See example in margin of page 7-4.)
9. Take a "dry" grab sample to test the tube installation.

Figure 7.1 Removing and Replacing the Pump Tube

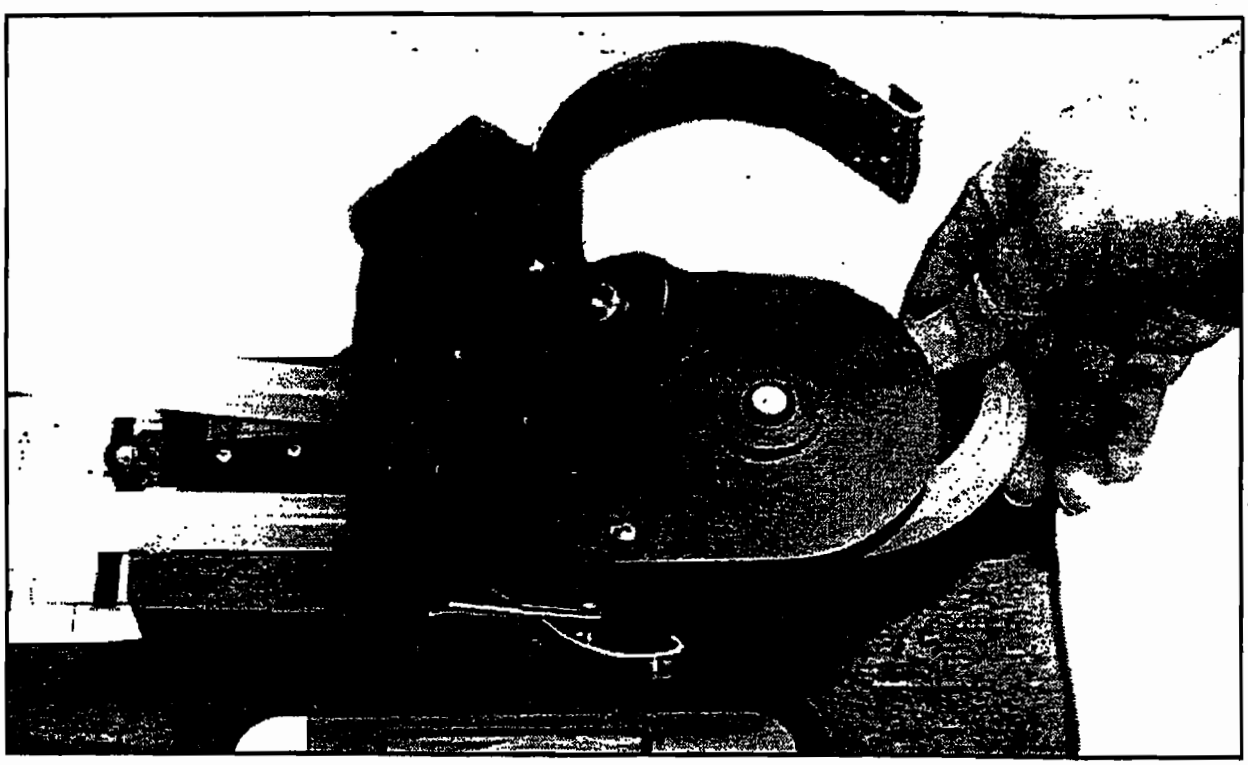

Figure 7.2 Placing the Pump Tube in the Liquid Detector

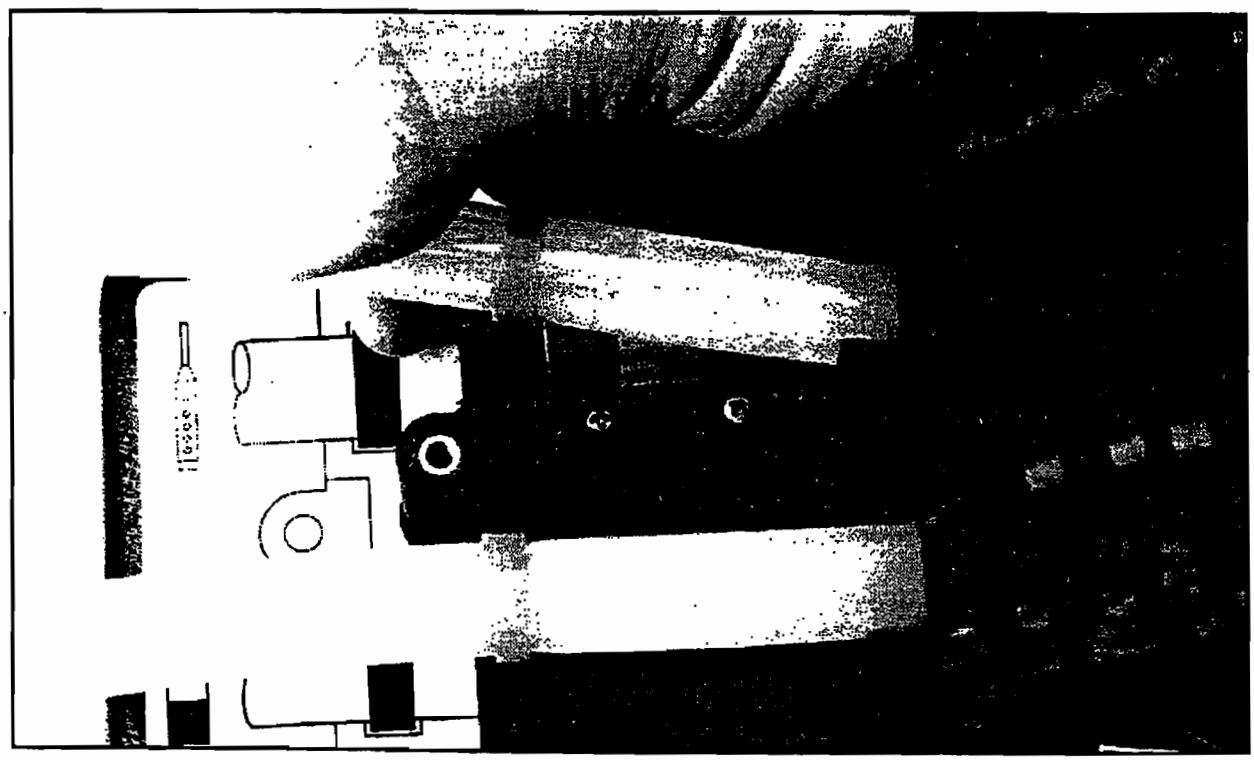

OPENING THE CONTROLLER CASE

⚠ CAUTION

The circuit boards can be damaged from a discharge of static electricity. Always use an antistatic mat when opening the controller to protect the circuit boards.

☑ Note

The case top and bottom fit together with a sealed tongue-and-groove joint. Any damage — nicks or cuts — to the tongue, groove, or sealing gasket prevent the case from sealing completely when you close it. Use extreme care when opening the case to avoid damaging the joining surfaces.

You will need to open the controller case to gain access to:

- The desiccant bag that dries the controller's interior
- The battery that provides backup power to the controller

To open the case:

1. Pull the discharge tube and pump tube away from the bulkhead fitting.
2. Remove the distributor arm by unscrewing the nut that attaches the arm to the distributor shaft. **DO NOT ROTATE THE DISTRIBUTOR ARM MANUALLY; THIS WILL SEVERELY DAMAGE THE DISTRIBUTOR DRIVE GEARS.**
3. Remove the controller from the center section.
4. Open the case by removing the 11 screws that attach the case bottom to the case top.

Refer to Figure 7.3 for the location of the desiccant box. To gain access to the main circuit board and battery, remove the two distributor connectors and the EMI shield.

RECHARGING THE DESICCANT

The 6712 Samplers use a desiccant bag inside the controller case to prevent moisture damage to its electronic components.

Follow the instructions in *Opening The Controller Case* above to open the controller. Remove the bag from the cardboard box at the front of the case (Figure 7.3).

⚠ CAUTION

Desiccant may produce irritating fumes when heated. Observe the following precautions:

- Use a vented oven in a well ventilated room.
- Do not remain in the room while recharging is taking place.
- Use the recommended temperature.

There have been reports of irritating fumes coming from the desiccant during reactivation. While our attempts to duplicate the problem have been unsuccessful, we still urge you to use caution.

Material Safety Data Sheets are provided in *Appendix B*.

How To Recharge The Desiccant

Do not put the cardboard box in the oven. You should recharge the desiccant when the area marked "30" on the paper humidity indicator turns pink.

Place a sheet of brown paper on a flat metal sheet. You can use a brown grocery bag and a typical cookie sheet. Place only the bags on the sheet. Do not stack the bags on top of each other or allow them to touch. Place in a vented, circulating forced air, convection oven in a well ventilated room. Allow two inches of air space between the top of the bags and the next metal tray above the bags. Keep the tray a minimum of 16 inches from heating element. Heat the bags at a temperature of 240 to 250°F (116 to 121°C) for 12 to 16 hours. At the end of the time period, the bags should be immediately removed and placed in an air tight container for cooling. The desiccant will be recharged to approximately 80 to 90% of its previous capacity. After repeated recharging, the desiccant bag may require replacement.

Some bags will have the temperature and time for recharging the desiccant printed on the bag. If they differ, use the temperature and time printed on the bag.

Figure 7.3 Opening the Controller

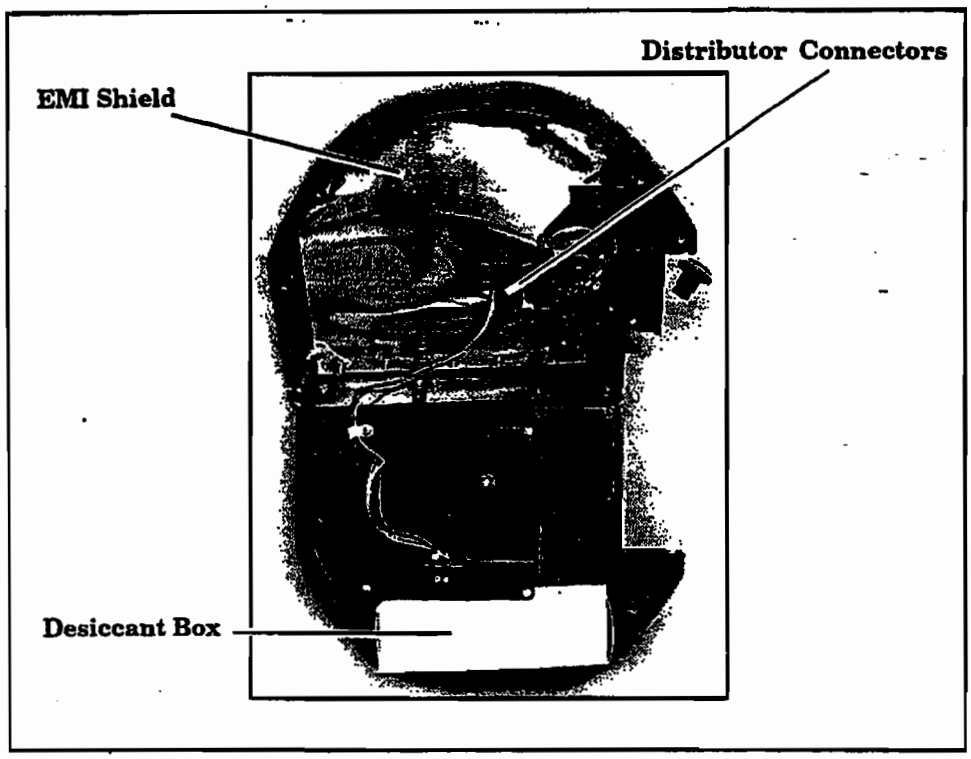

Figure 7.4 Main Circuit Board Connections

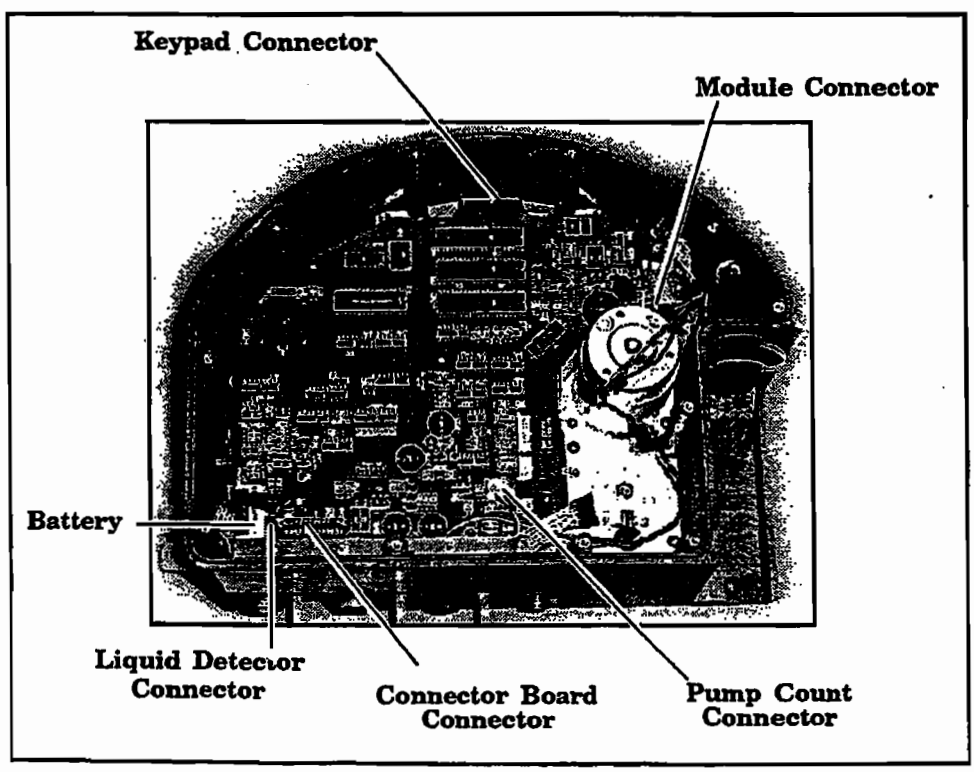

Caution

Danger of explosion if lithium battery is incorrectly replaced. Replace with the same type, ensuring correct polarity. Do not dispose of used lithium battery in fire.

REPLACING THE INTERNAL BATTERY

Battery Warning Display

```
WARNING!
REPLACE INTERNAL
BATTERY BEFORE
17-OCT-06
```

A lithium battery housed inside the controller maintains power to the sampler's memory when the controller is disconnected from a power source. If it discharges completely, the sampler will lose all program settings and all data stored in memory when the external power source is disconnected. The battery requires replacement every five years. The sampler displays a warning (see example at left) within one month of its expected life to alert you to the battery's impending expiration. The warning appears each time you turn the sampler on until you reset the alarm. When you reset the alarm, the sampler resets the warning to a date 59 months from the current date.

While replacing the battery, it is likely that the stored readings will be lost and your program will revert to the default program. Before proceeding, retrieve the stored data and record your program settings.

☑ Note

Isco recommends you replace the battery every five years, as soon as the battery warning appears. To insure that the replacement meets Isco's specifications, use only Isco replacement batteries. (See *Appendix D, Replacement Parts.*)

To replace the internal battery:

1. Open the controller case. Separate the case bottom and top by removing the two distributor connectors.
2. Lift the desiccant box from the case.
3. Remove the EMI shield and grounding straps by loosening the five 1/4-inch stop nuts.
4. Disconnect the module, liquid detector, and pump count connectors from the main circuit board.
5. Remove the three screws and the 1/4-inch stud attaching the main circuit board to the case.
6. Detach the main circuit board from the keypad connector by pulling gently upward on the edges of the board next to the connector. Pull the main board up until the keypad connector is almost even with the edge of the case. Next, detach the main circuit board from the connector board.
7. Desolder the lithium battery, using care to prevent damage to the circuit board. Insert the replacement battery and solder it in place.
8. Reconnect the main circuit board to the connector board before reconnecting it to the keypad. Replace the 1/4-inch stud and the three screws, and reconnect the module, liquid detector, and pump count connectors.
9. Replace the EMI shield and grounding straps. Reconnect the two distributor connectors.
10. Ensure that all connections and hardware are secure. Replace the desiccant and close the case.
11. Reset the battery alarm.

⚠ CAUTION

The circuit boards can be damaged from a discharge of static electricity. Always use an antistatic mat when opening the controller to protect the circuit boards.

☑ Note

Poor soldering techniques can easily damage a printed circuit board. The battery should be replaced by a skilled technician.

ERROR MESSAGES

If the sampler detects an error that prevents it from taking a sample or continuing the program, it displays an error message.

```
OPERATION ERROR:
PUMP JAMMED
```

There are messages for the following conditions:

- PUMP JAMMED
- DISTRIBUTOR JAMMED
- PROBABLE OVERFLOW
- POWER FAILED
- LOW BATTERY
- USER STOPPED
- NO DISTRIBUTOR ARM
- NO LIQUID DETECTED
- NO MORE LIQUID
- PUMP LATCH OPEN
- SAMPLER SHUT OFF
- BOTTLE FULL
- SAMPLE IN PROGRESS

Error Messages

```
ERRORS HAVE OCCURED
DURING PROGRAM
```

Since the sampler may encounter more than one error during a program, it does not display the messages continuously. Instead, it records each error and the time it occurred in the Sampling Results and Combined Results report. It alerts you to the recorded errors by displaying the message, "ERRORS HAVE OCCURRED DURING PROGRAM."

If the sampler detects a low battery condition, it stops the running program and displays the "LOW BATTERY" error message. A low battery condition exists when five consecutive sample events have resulted in a POWER FAILED error message.

```
FATAL ERROR
NO DISTRIBUTOR ARM
```

Fatal Error

The Fatal Error message will only show up if you are using a multiple bottle configuration and the distributor system fails. Failing the test can indicate any of the following conditions:

- The distributor arm is not attached to the sampler.
- The distributor-arm stop inside the center section is missing or broken.
- The distributor drive mechanism inside the controller is malfunctioning.

Warning Messages

```
WARNING: REPLACE
PUMP TUBE
```

```
WARNING!
REPLACE INTERNAL
BATTERY BEFORE
5-FEB-06
```

WARNING MESSAGES

Occasionally, the sampler displays a warning message to alert you to a potential problem. There are two warnings. The first warning, "REPLACE PUMP TUBE," reminds you to check the condition of the pump tube. The second warning reminds you that the internal battery is near expiration and should be replaced. Instructions regarding the pump tube and the internal battery can be found elsewhere in this chapter.

Chapter 8 Software Options

Chapter Contents

- *Program Lock*
- *Telephone Commands*

The 6712 Sampler's software includes specialized software options that can be purchased individually from Isco.

Once activated, the purchased option is always available, even if the software is upgraded at a later time. **These options must be installed at the factory. Consult the factory for further details.**

The software options include:

- **Program Lock** (P/N 60-9003-532) - Secure access to the sampler's program settings.
- **Telephone Commands** (P/N 60-9003-531) - Remotely control the sampler from a touch-tone telephone.

To view which software options have been activated, select VIEW REPORT>SYSTEM IDs. A software options screen will list a code for each active option.

Code	Software Option
1108	Program Lock
1109	Phone Commands

PROGRAM LOCK

Program Lock

PROGRAM LOCK DISABLED

ENABLE PROGRAM LOCK?
YES NO

CHANGE PASSWORD TO

REENTER NEW PASSWORD

The Program Lock adds password security to the 6712 sampling programs. With this option activated, a user-selected password (up to five digits) must be entered before any program changes or run time modifications can be made. Run time modifications include accessing the Manual Pause menu options and shutting off the sampler. You will still be able to run the current program, view reports, and interrogate the sampler without the knowledge of the password.

If three consecutive attempts to enter the password fail, a five minute "time-out" will follow in which most keys are deactivated.

The user-selected password defaults to "6712" and may be changed in the Software options that are available in the Extended Program mode (see example to the left). While the password may only be changed in the Extended Program mode, the program lock works for both Standard and Extended programs.

Should you forget your password, a key code can be obtained from Isco's Customer Support Department for a nominal fee.

Password Protected Functions

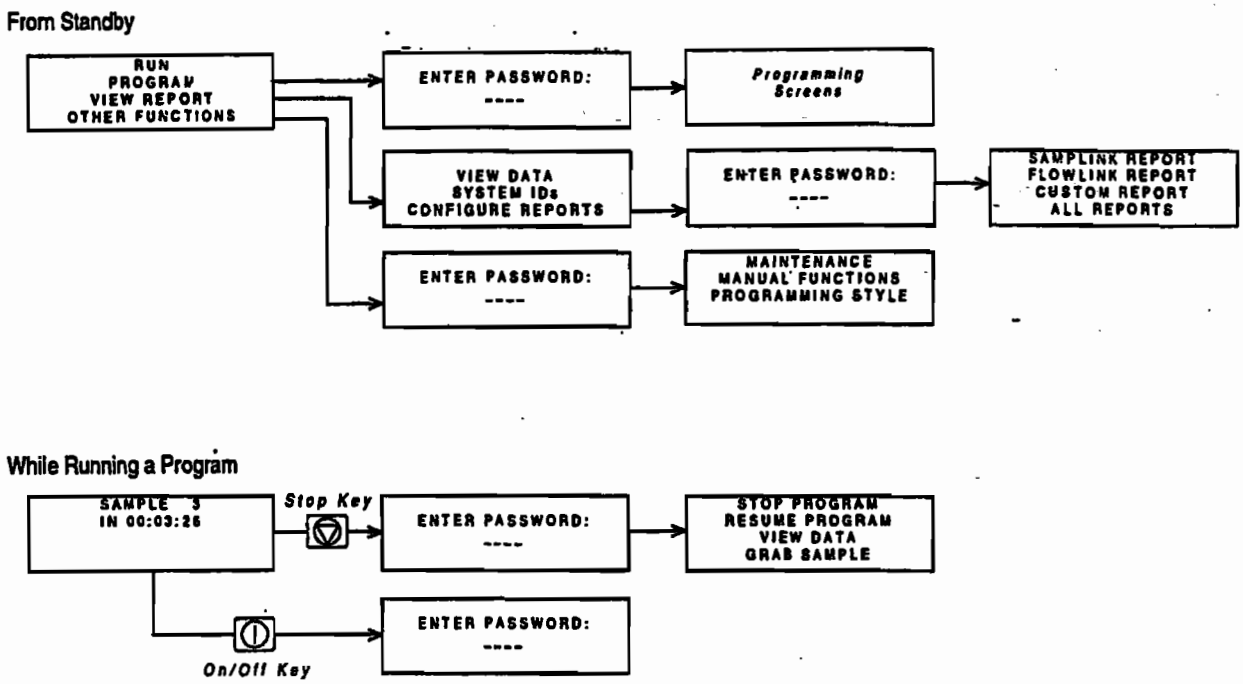

TELEPHONE COMMANDS

Note

The interrogator cable must be disconnected before you can use the modem.

Several commands are available to control the sampler's operation from a remote location. Telephone commands require the sampler to be equipped with the factory-installed 2400 baud talking modem.

After connecting to the sampler from a touch-tone telephone, command numbers may be entered from the telephone's keypad, followed by the [#] (pound) button. The commands are listed in Table 8.1.

To use telephone commands:

1. Dial the sampler's telephone number. When the sampler connects, it answers with "Isco Sampler Site [number]." If the sampler does not receive a command in five seconds, it assumes that a computer modem has called and initiates the modem connect sequence. If this occurs you must hang up and try again.
2. Enter the command. For example, to run program 1, press [1] [#].
3. If the command is valid for its current state of operation, the sampler responds with "[command number], please acknowledge." If the command is not valid the sampler responds with the command number followed by three quick beeps. Enter a valid command.
4. Acknowledge the valid command by pressing the number. For the example, press [1].

5. If the number is incorrect, the sampler responds with your entry followed by three quick beeps. You must re-enter the command (step 2).
6. After the command is confirmed, the sampler replies with "[command number] acknowledge" and executes the command.

To enter additional commands, repeat steps two through five. The sampler will hang up after ten seconds of quiet time.

Table 8.1 6712 Telephone Commands

Command	Name	Description
[0][#]	START	This command will start immediately any program that has been run and is currently waiting to start.
[1][#]	RUN 1	This command will load program 1 as the sampler's current Extended program, reset partition data if the storage interval has changed, and run the program. RUN 1 will also run the current program when in the Standard programming mode. RUN 1 is valid at the Standby screen and when waiting to start.
[2][#] [3][#] [4][#]	RUN 2 RUN 3 RUN 4	These commands are available for Extended programming only. As with RUN 1, they will load the designated program, reset partition data if the storage interval has changed, and run the program. These commands are valid at the Standby screen and when waiting to start.
[5][#]	PHONE DISABLE	This command is similar in functionality to a pin F low signal (a signal typically used to enable or disable the sampler from a flow meter). Command 6# must be used to re-enable. PHONE DISABLE is valid while a program is running. At run time, the sampler starts with the phone enable in the enabled state.
[6][#]	PHONE ENABLE	This command is used to re-enable a phone-disabled sampler. PHONE ENABLE is valid while a program is running.
[7][#]	PHONE SAMPLE	This command causes the sampler to take a sample. The sample is treated as one of the program's samples and is placed in the current bottle (Part A's current bottle when using two-part programming). PHONE SAMPLE is valid while the program is running, after the start time, but not while in the Manual Pause screens.

Notes

Appendix A Menu Flowcharts

Flowchart 1 6712 Menu Tree for Standard Programming

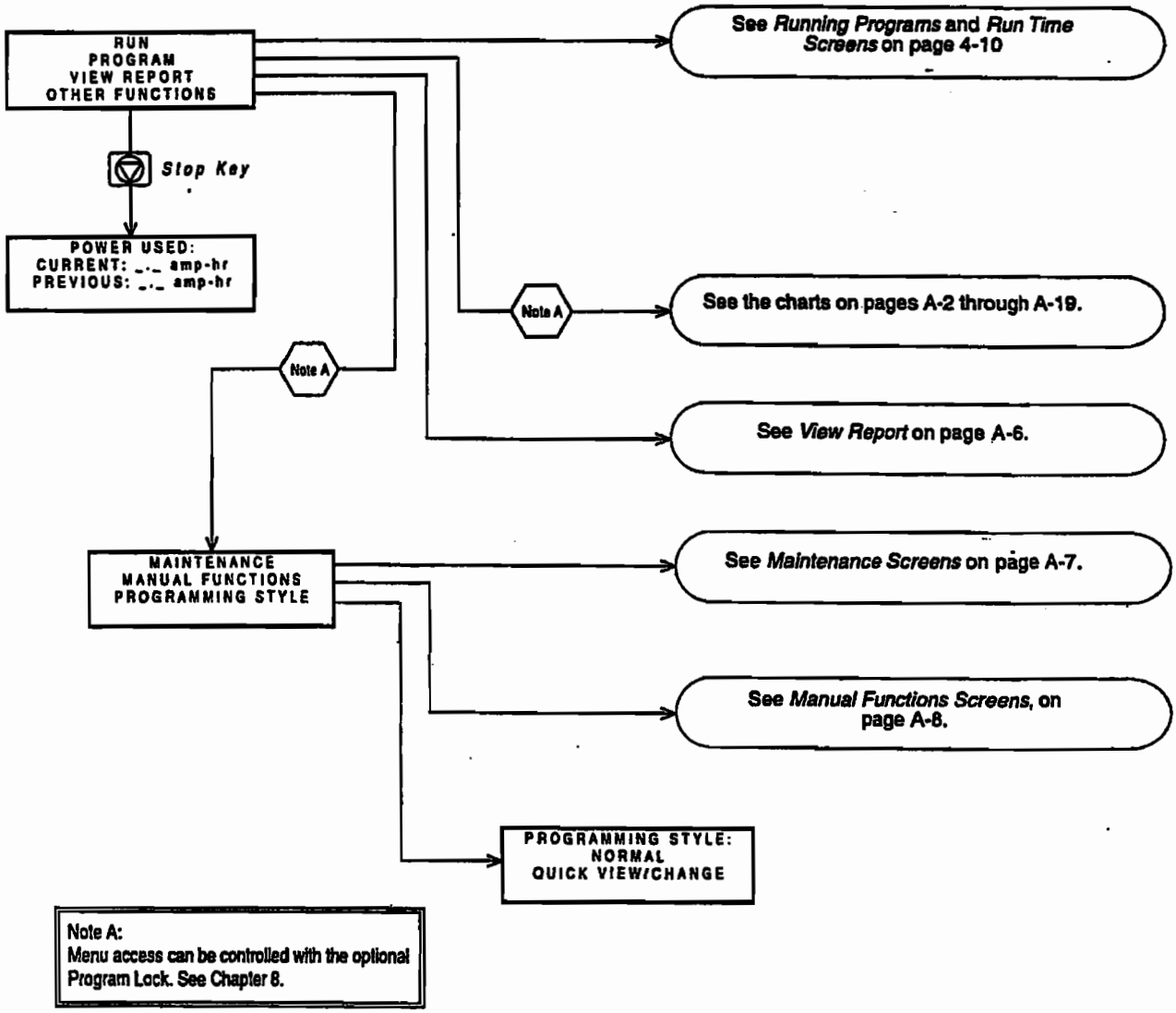

Flowchart 2 Standard Programming: Programming Screens

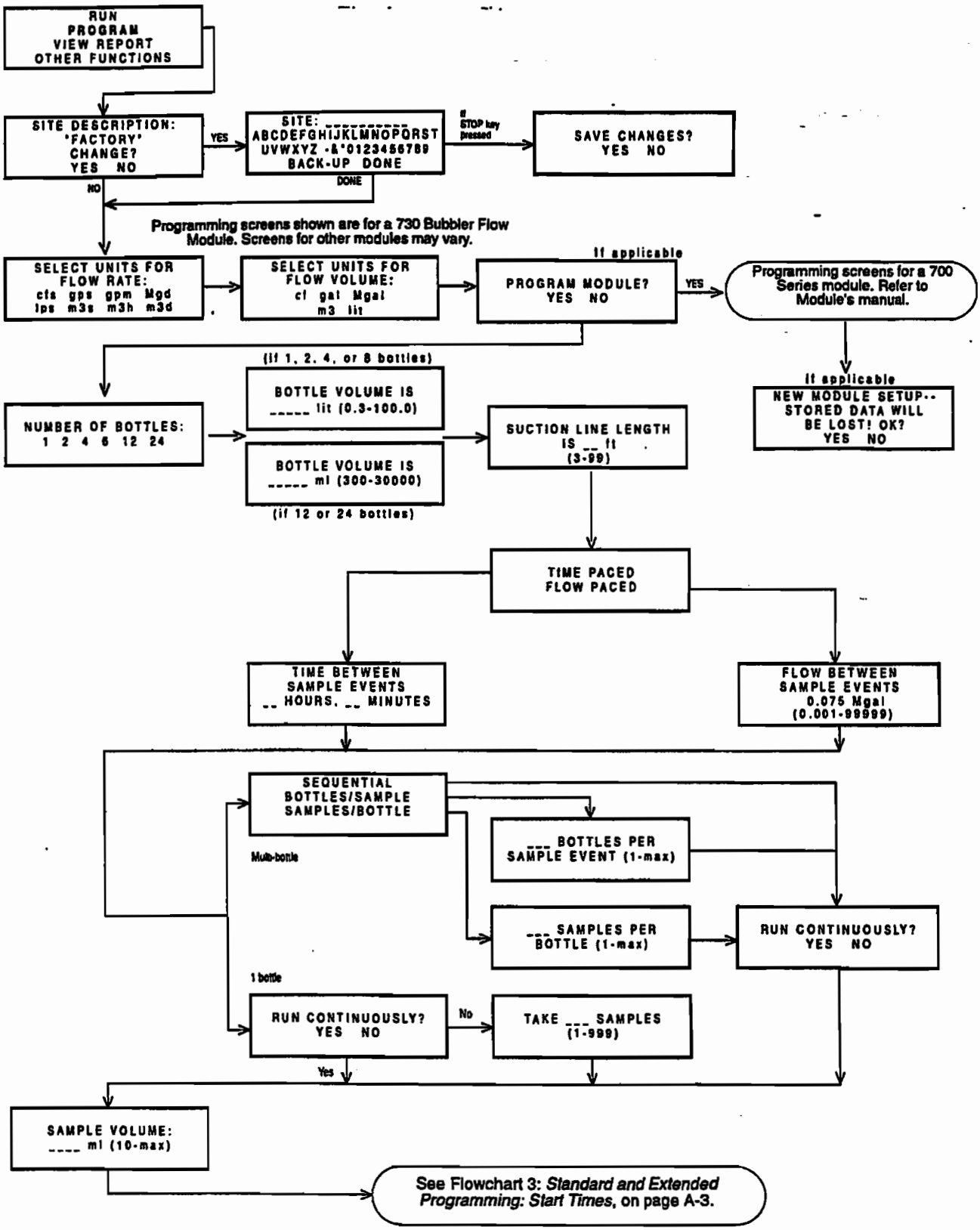

Flowchart 3 Standard and Extended Programming: Start Times

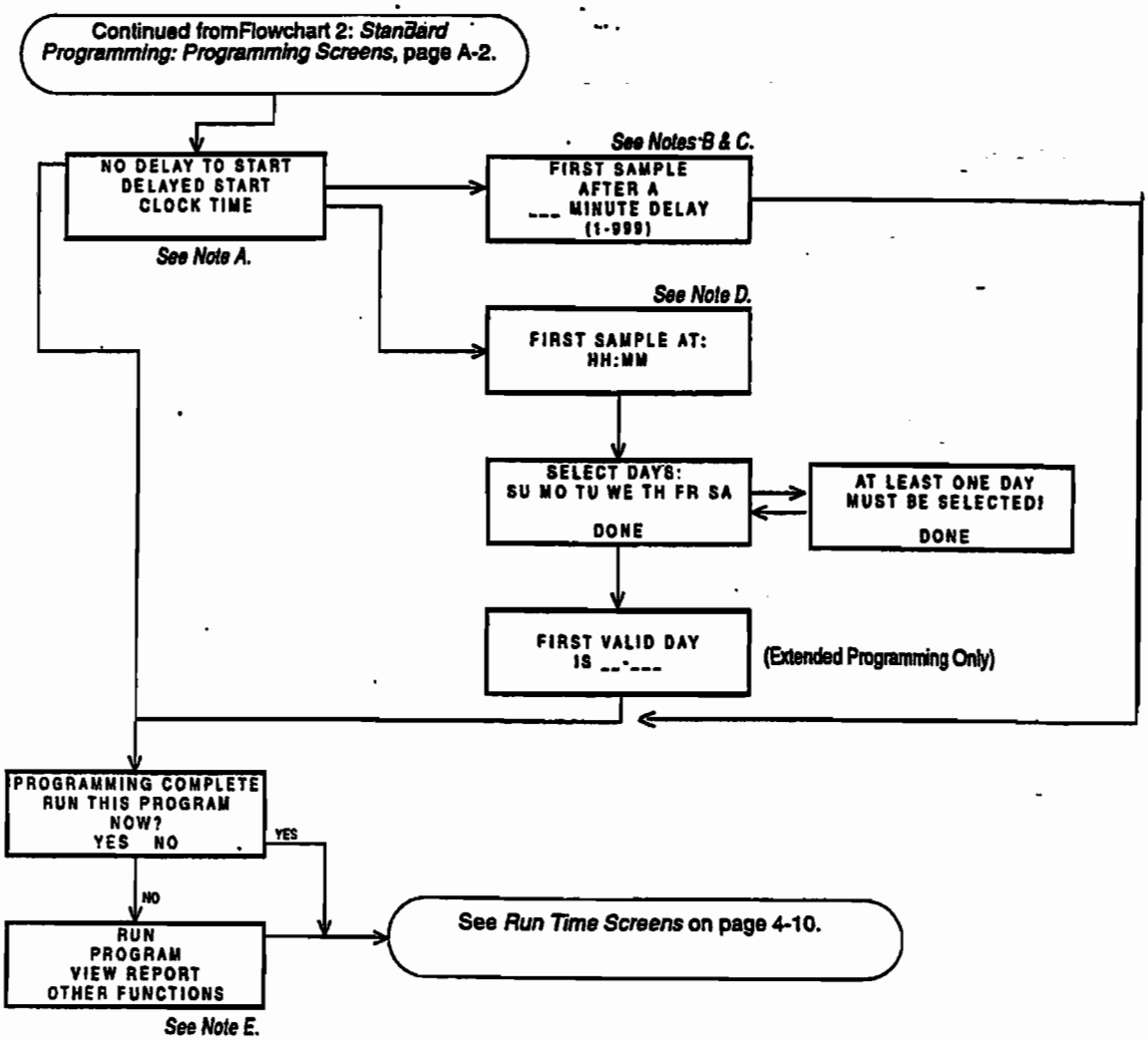

Notes

A. The WAIT FOR PHONE CALL option appears when using the optional Telephone Commands. See Chapter 8.

B. Appears for standard flow-paced programs.

```
START FLOW COUNT
AFTER A
___ MINUTE DELAY
(1-999)
```

C. Appears for extended programs.

```
START 'EXTENDED 1'
AFTER A
___ MINUTE DELAY
(1-999)
```

D. Appears for standard flow-paced programs.

```
START FLOW COUNT AT
HH:MM
```

E. Main menu for extended programming.

```
RUN 'EXTENDED 1'
PROGRAM
VIEW REPORT
OTHER FUNCTIONS
```

Flowchart 4 Standard Programming: Quick View; Programming Screens

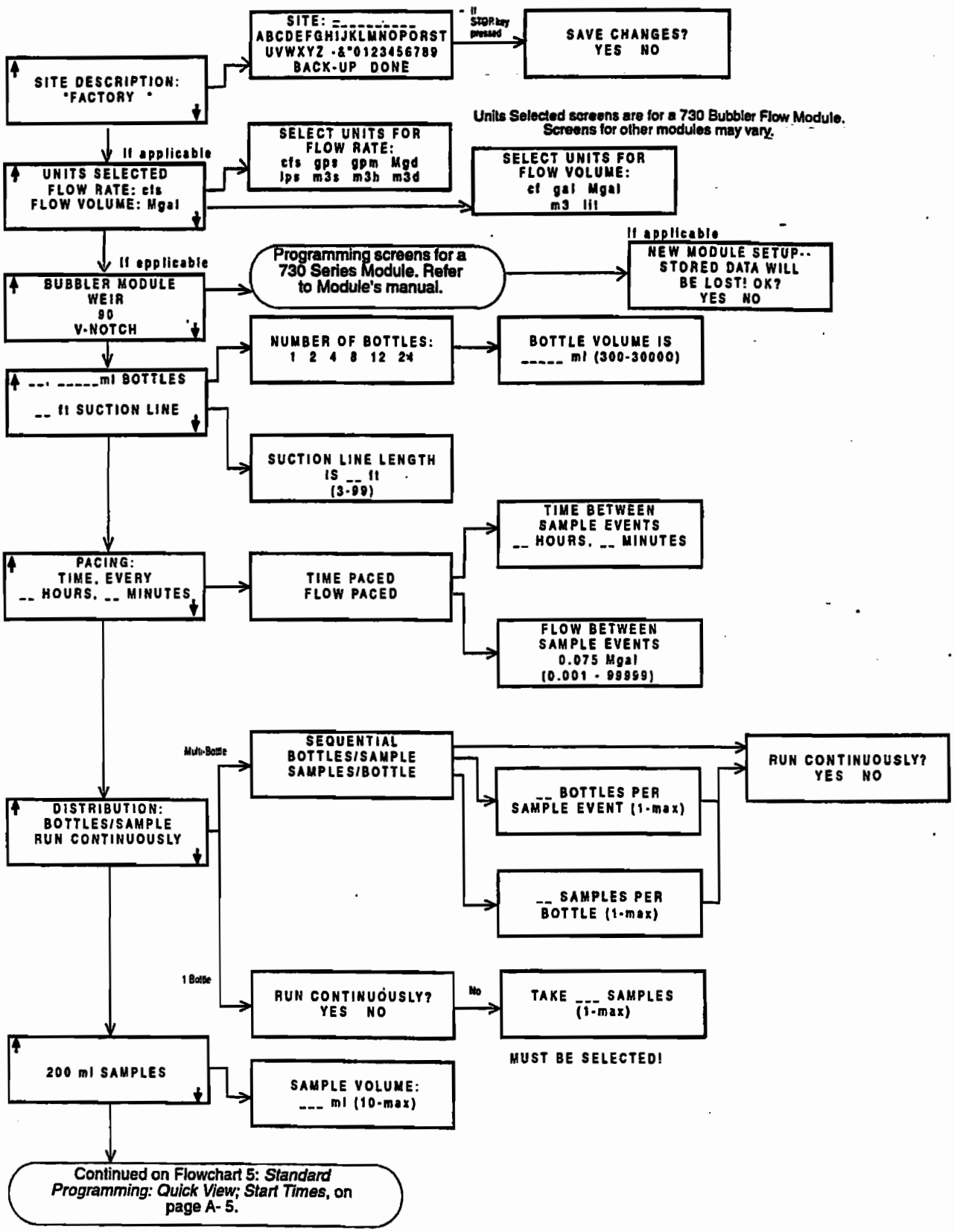

Flowchart 5 Standard Programming: Quick View; Start Times

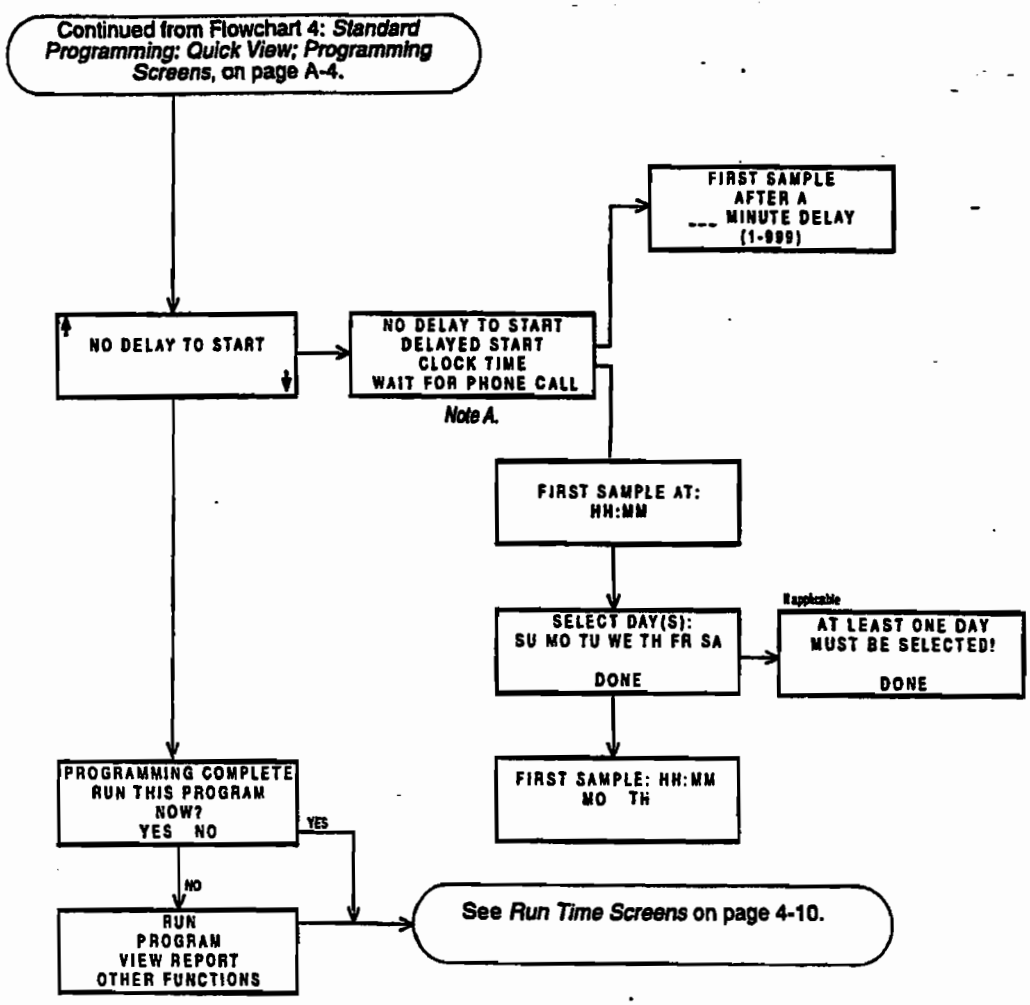

Note A.
The WAIT FOR PHONE CALL option appears when using the optional Telephone Commands. See Chapter 8.

Flowchart 6 View Report

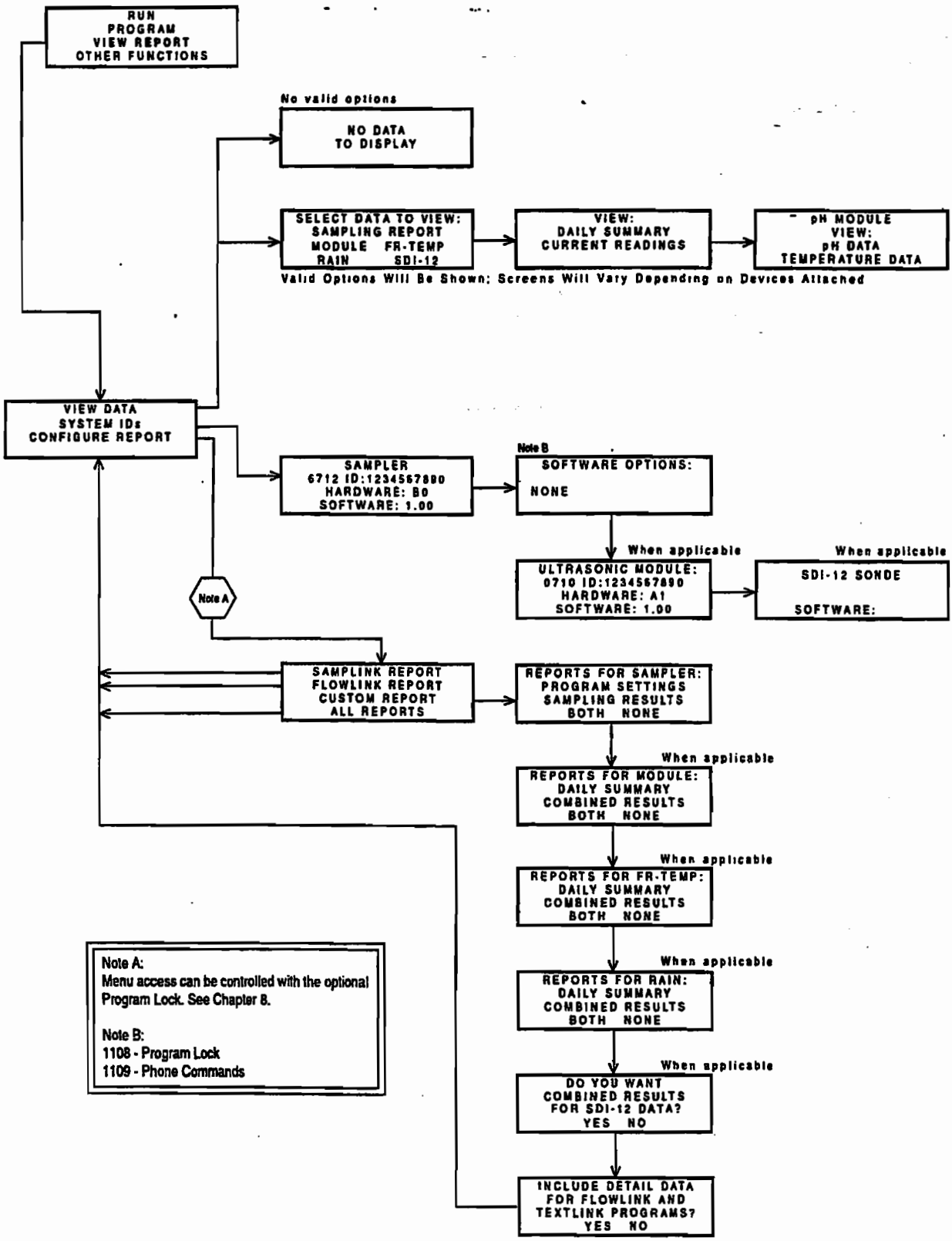

Flowchart 7 Maintenance Screens

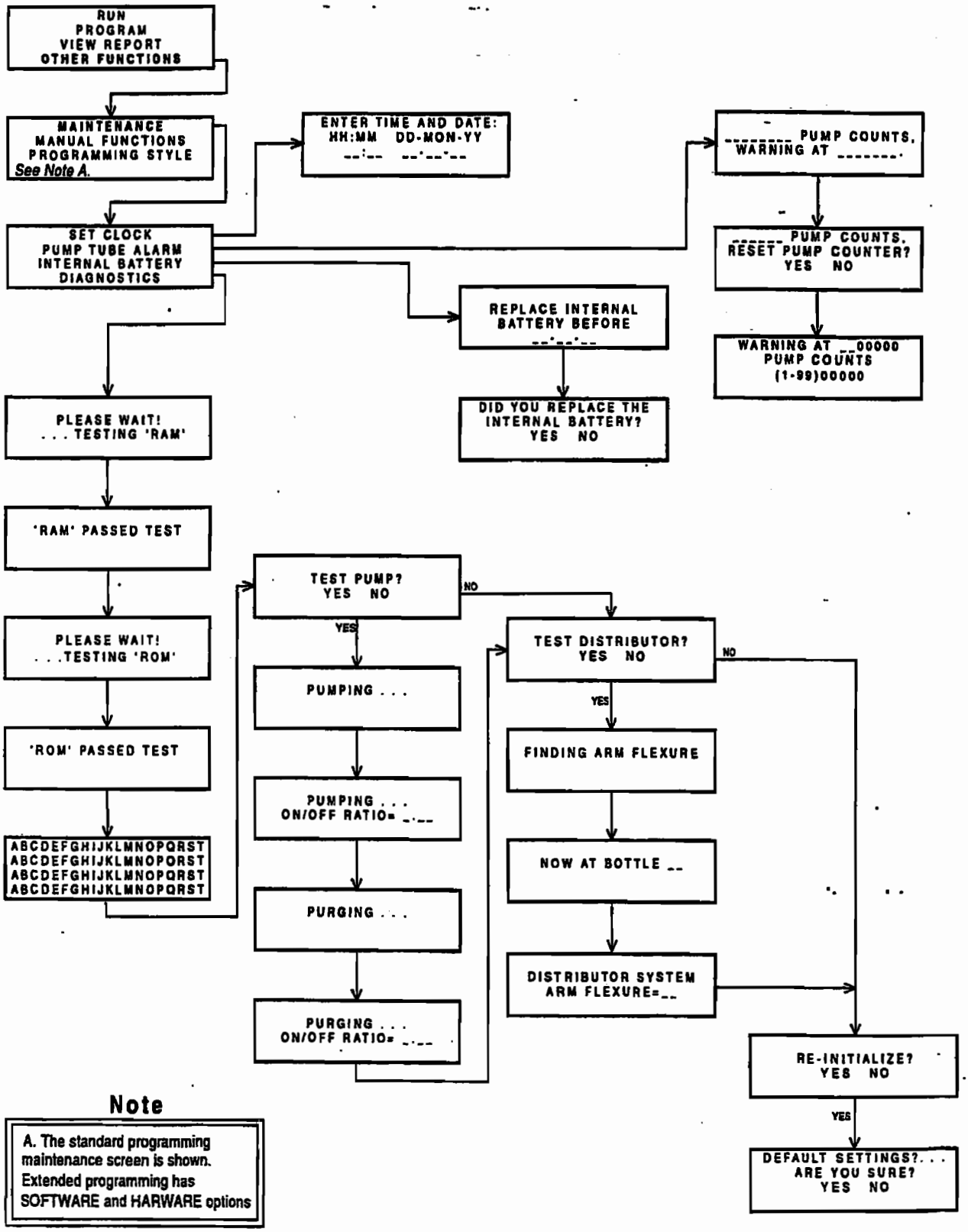

Note

A. The standard programming maintenance screen is shown. Extended programming has SOFTWARE and HARWARE options

Flowchart 8 Manual Functions Screens

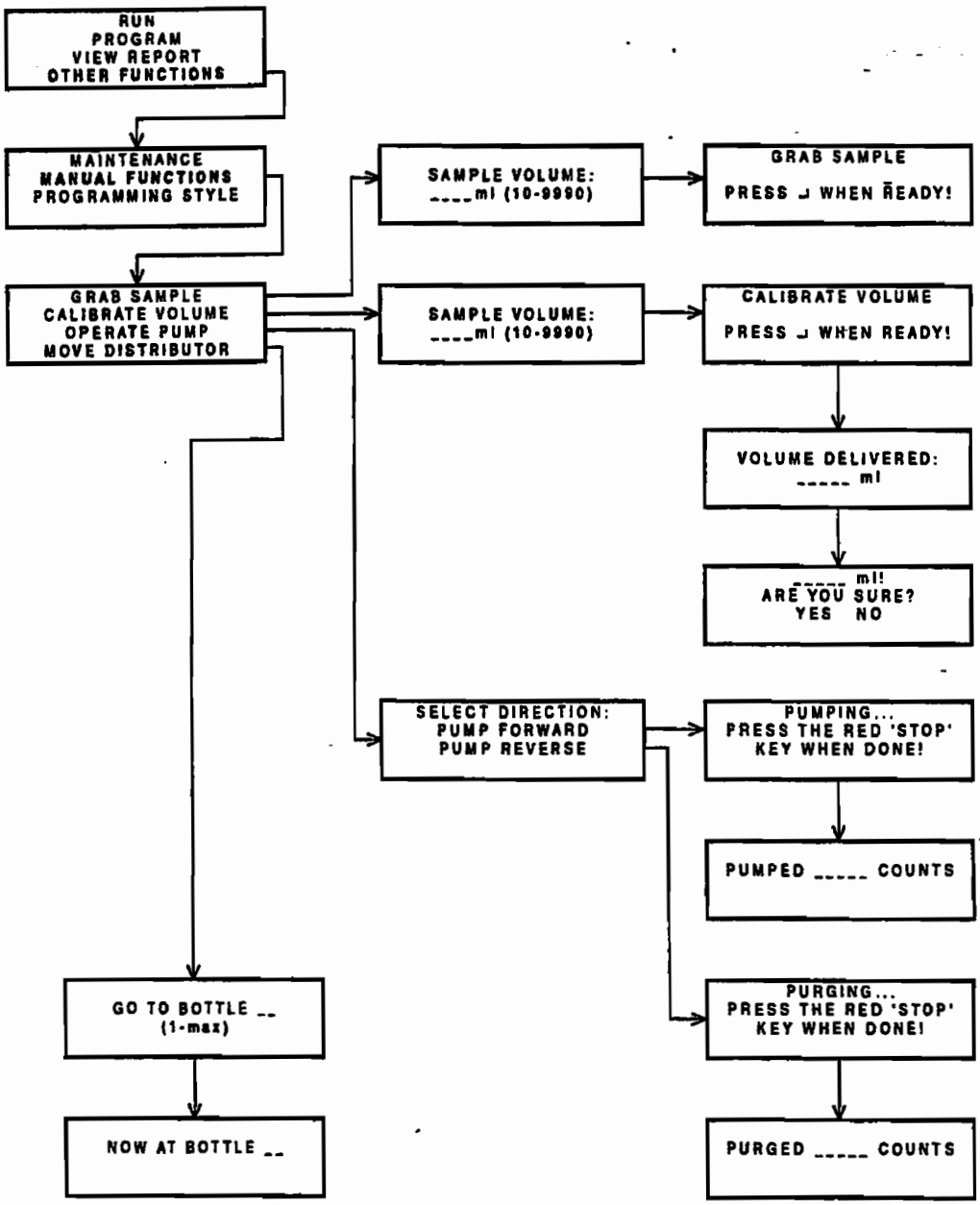

Flowchart 9 Extended Programming: Programming Screens

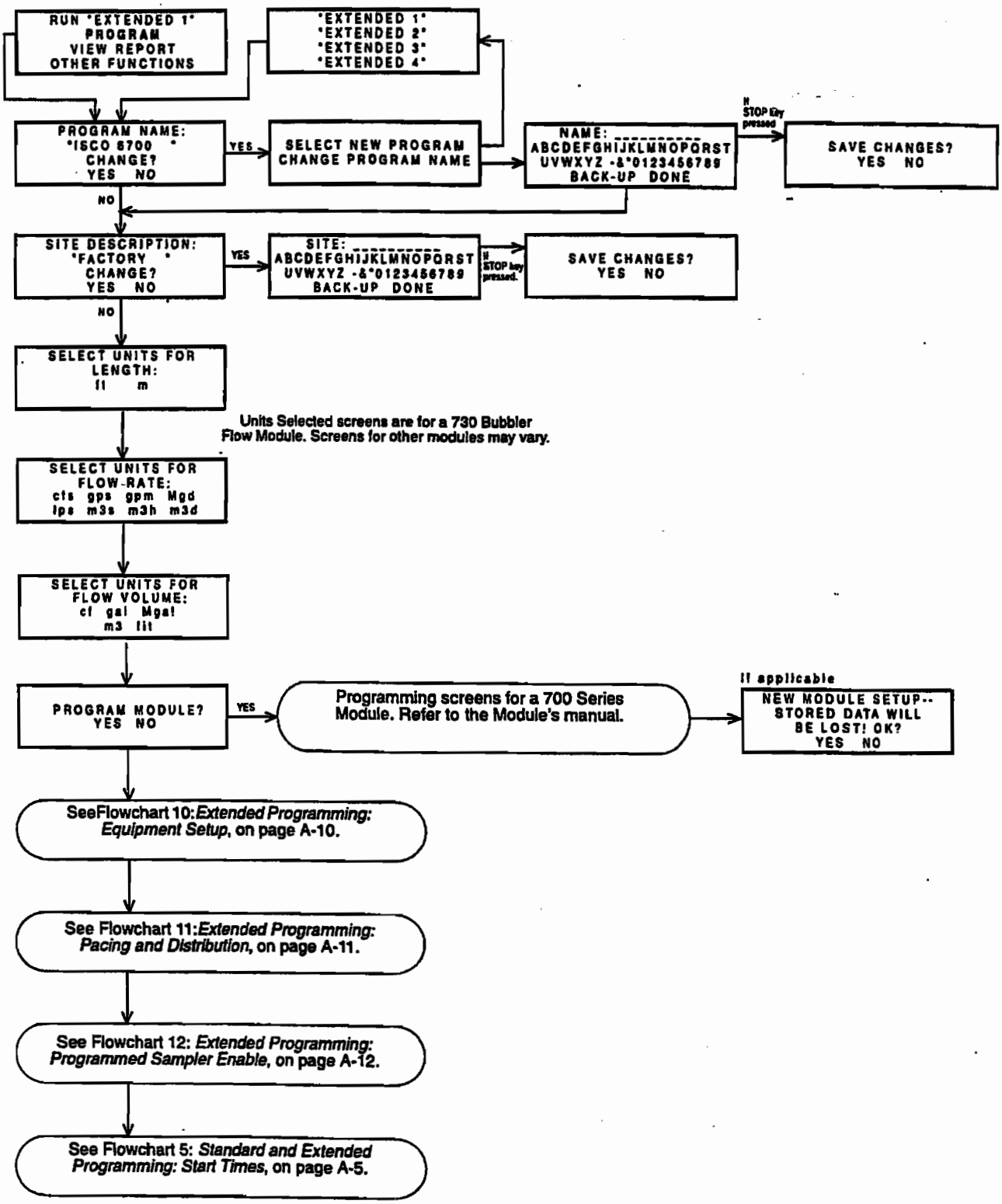

Flowchart 10 Extended Programming: Equipment Setup

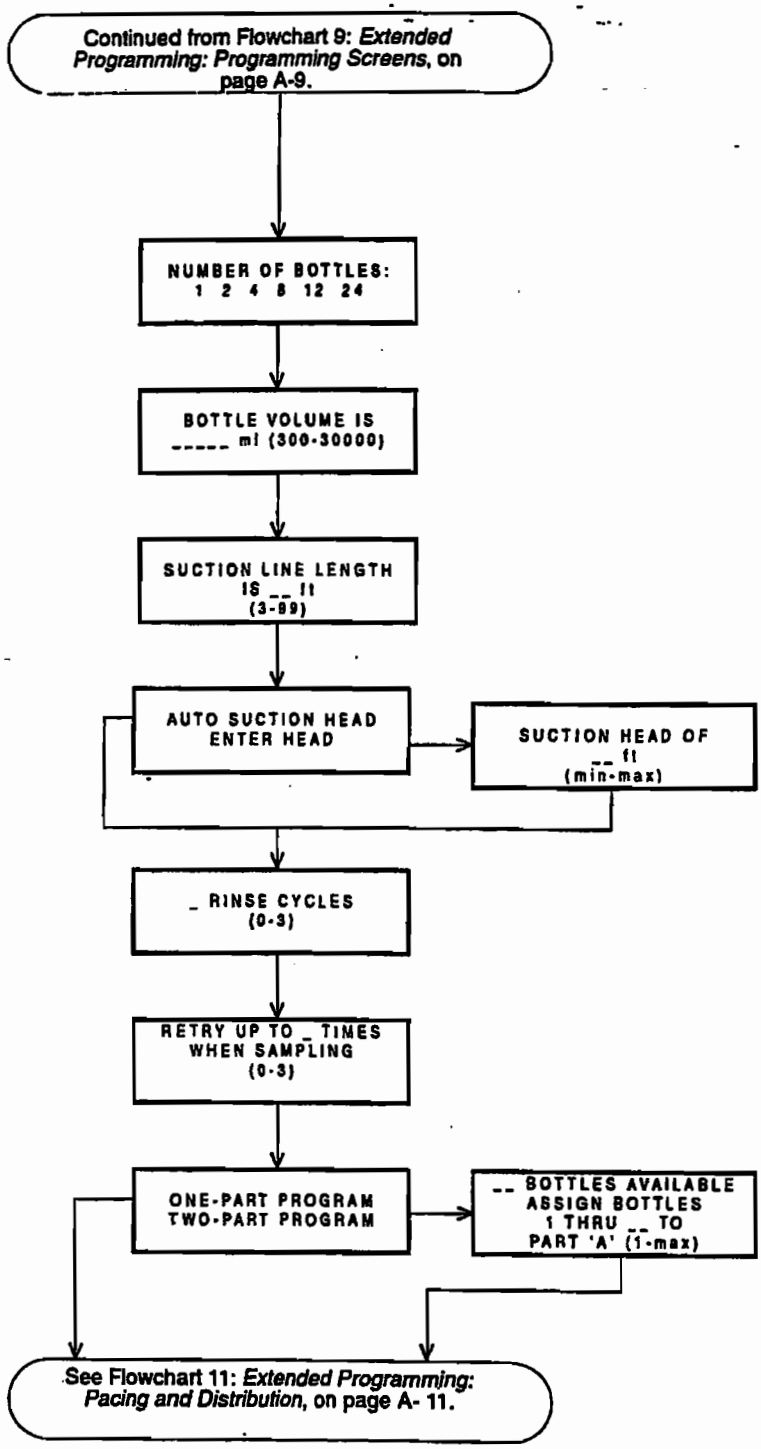

Flowchart 11 Extended Programming: Pacing and Distribution

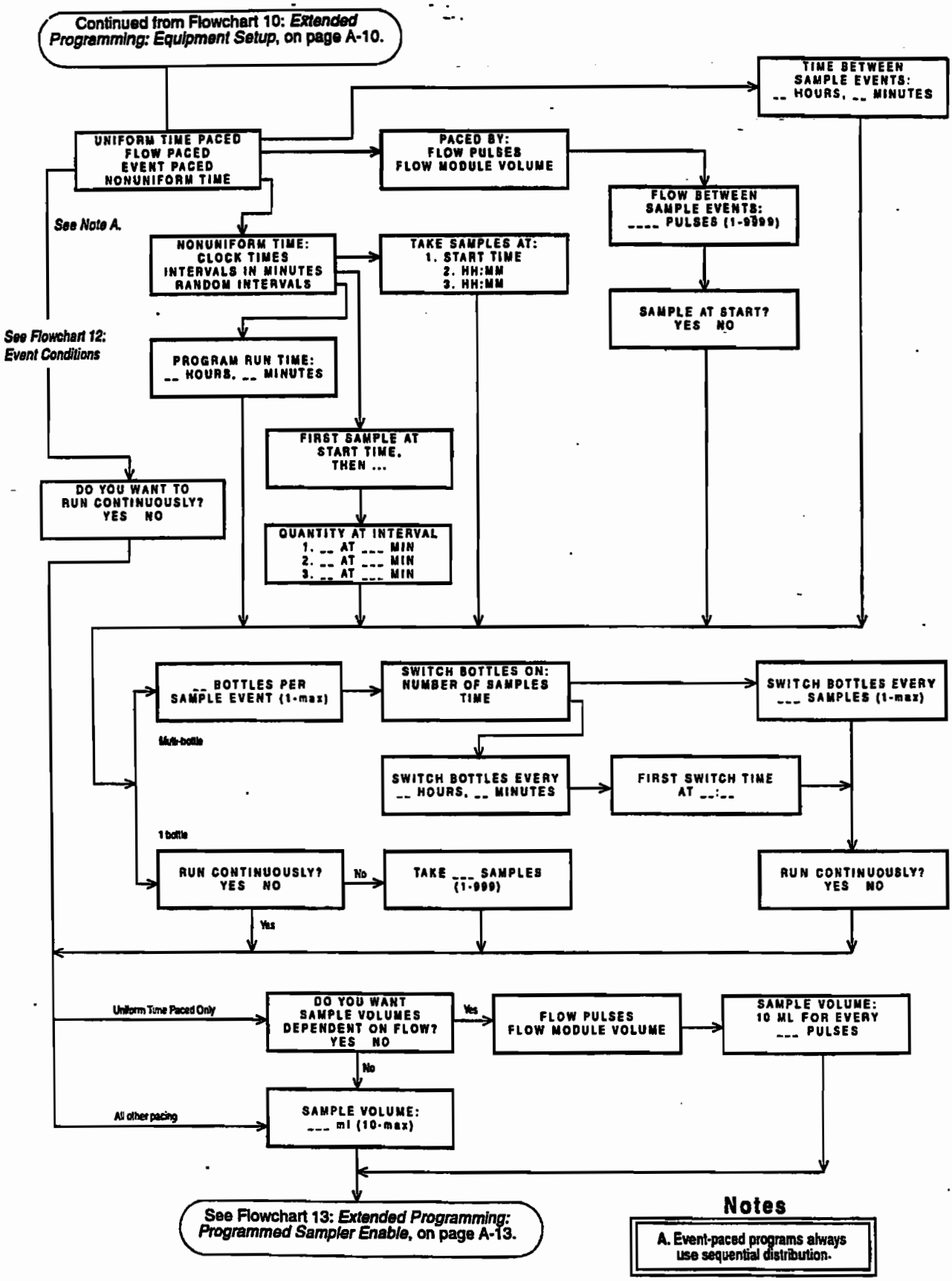

Notes

A. Event-paced programs always use sequential distribution.

Flowchart 12 Extended Programming: Event Conditions

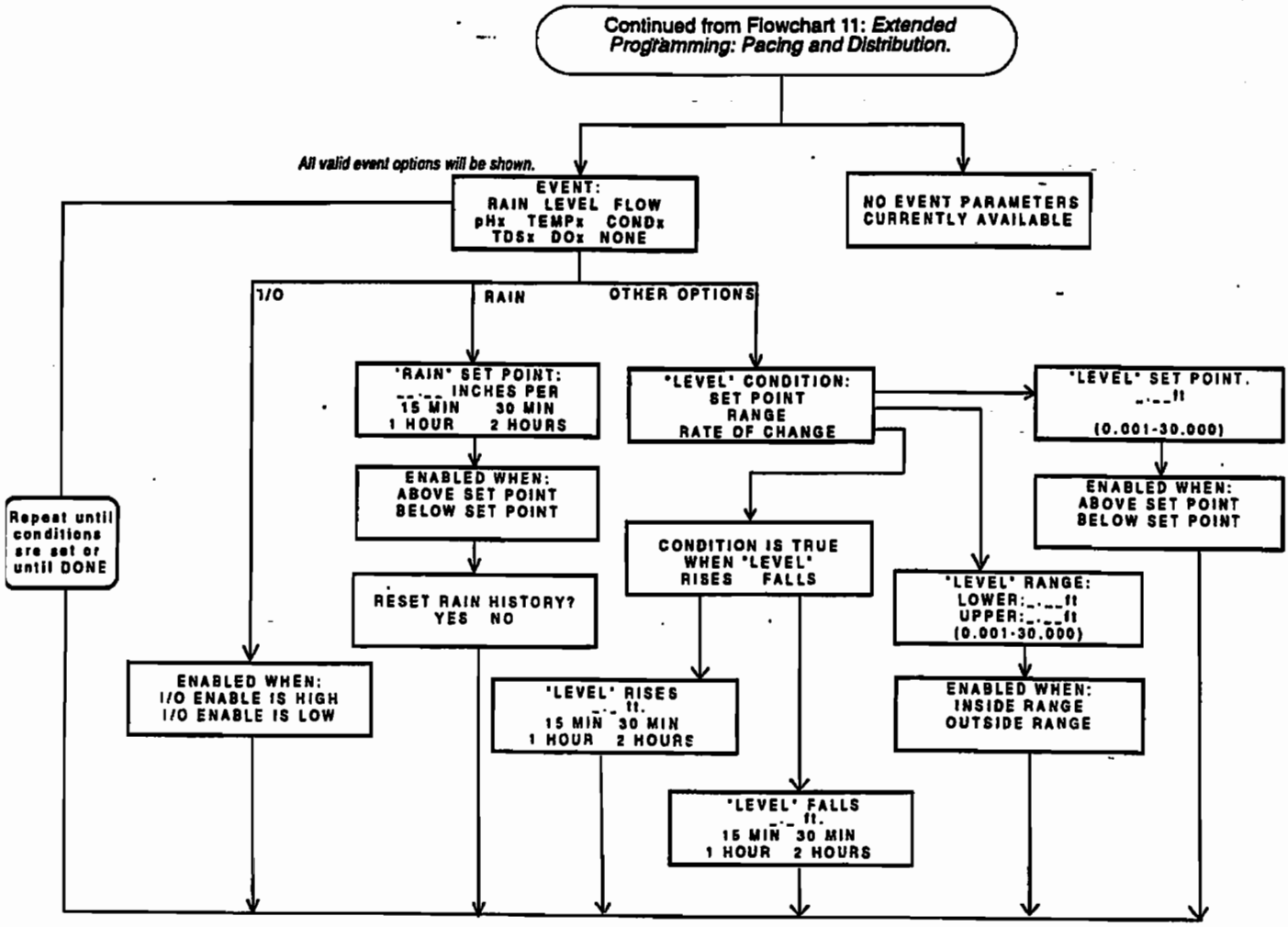

Flowchart 13 Extended Programming: Programmed Sampler Enable

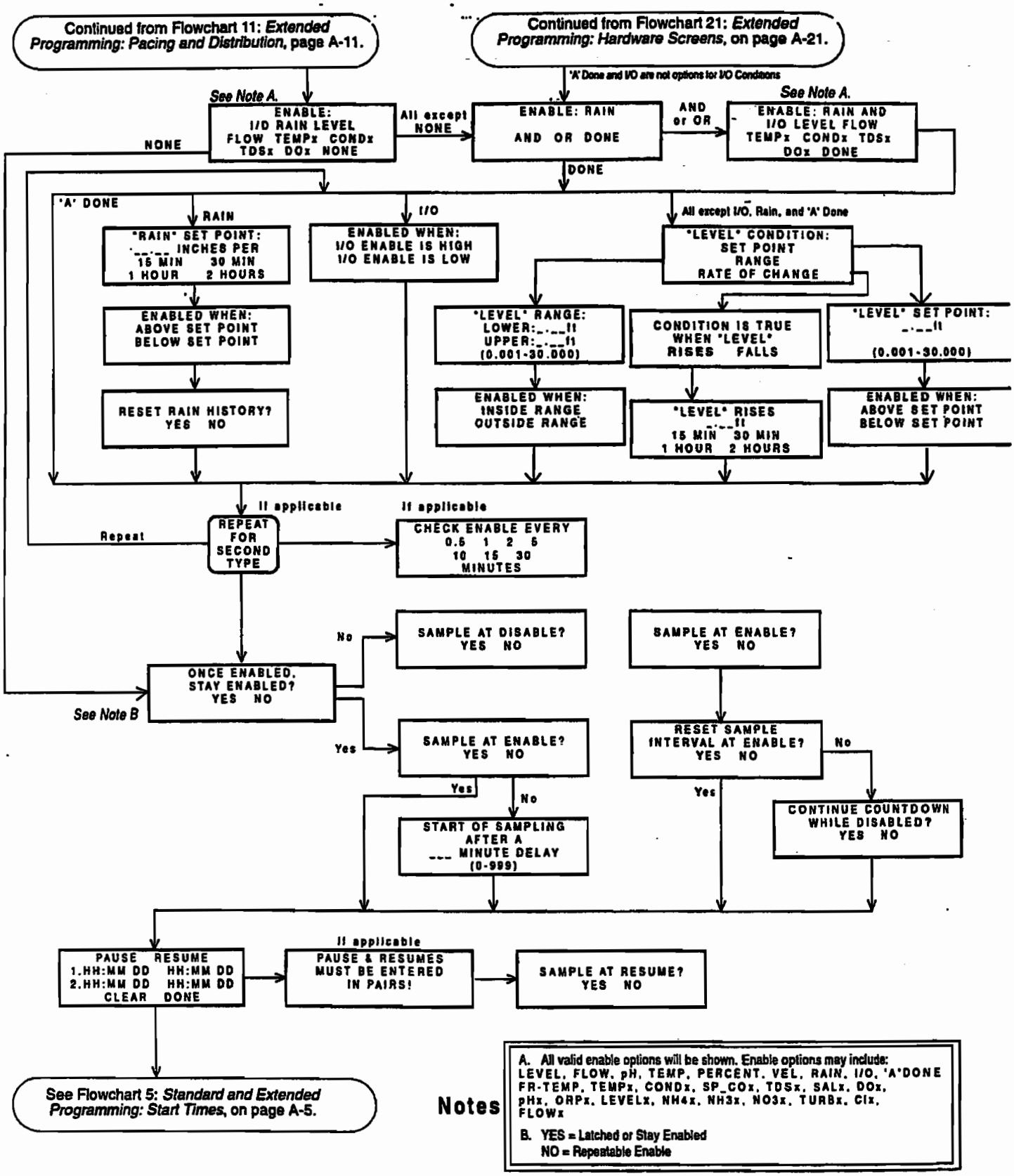

Notes

A. All valid enable options will be shown. Enable options may include: LEVEL, FLOW, pH, TEMP, PERCENT, VEL, RAIN, I/O, 'A'DONE FR-TEMP, TEMPx, CONDx, SP_COx, TDSx, SALx, DOx, pHx, ORPx, LEVELx, NH4x, NH3x, NO3x, TURBx, Clx, FLOWx

B. YES = Latched or Stay Enabled
NO = Repeatable Enable

Flowchart 14 Extended Programming: Quick View; Programming Screens

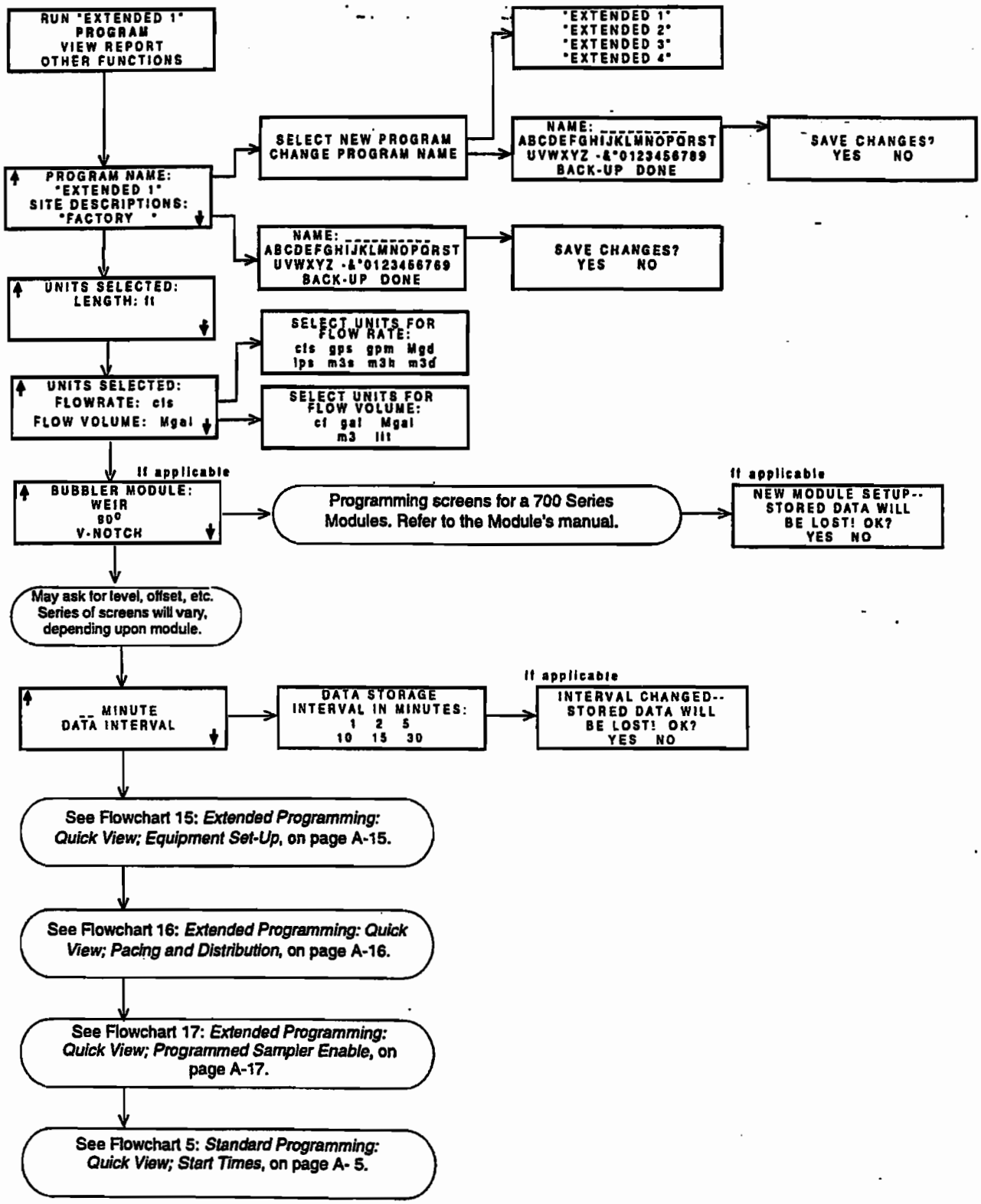

Flowchart 15 Extended Programming: Quick View; Equipment Set-Up

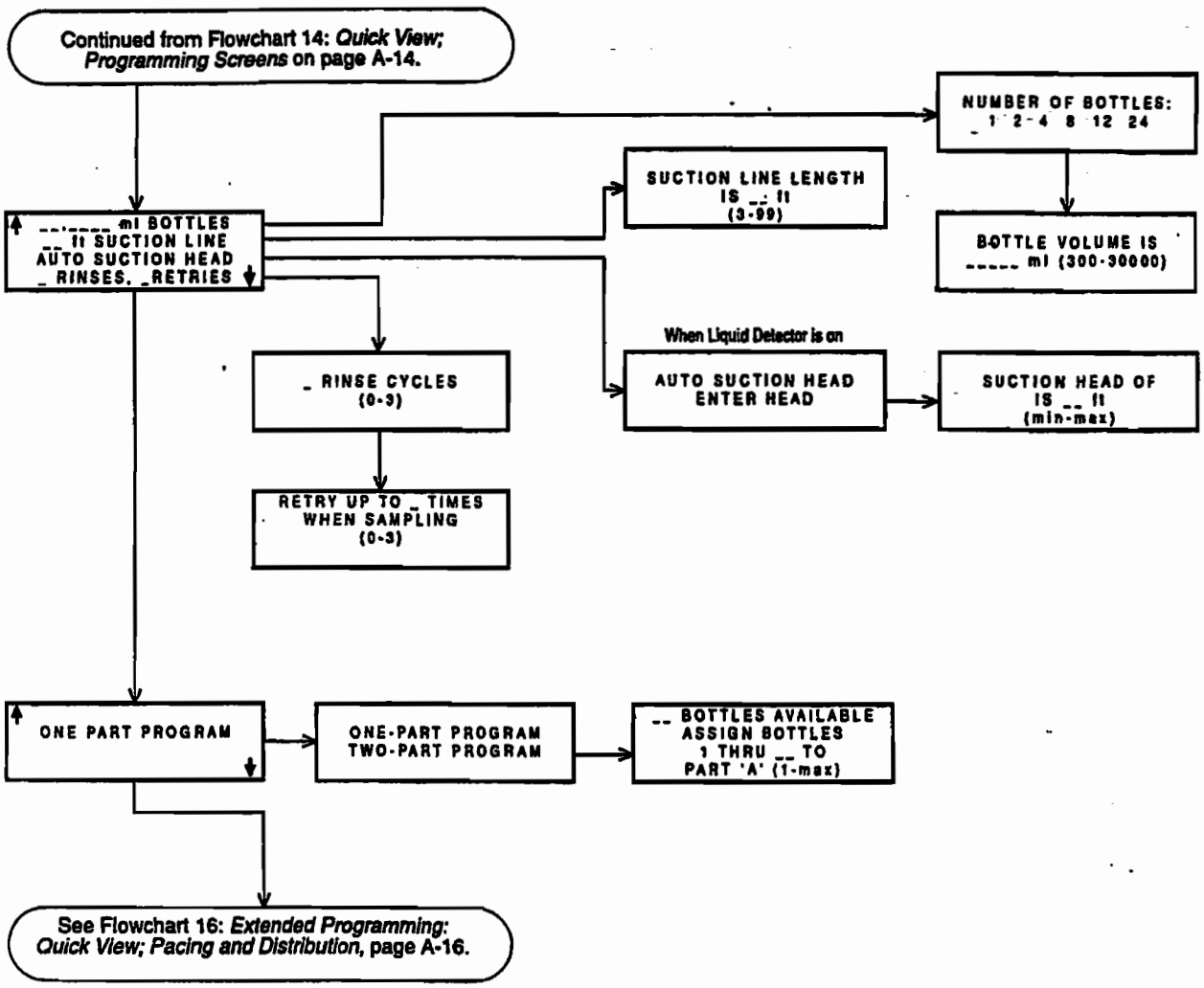

Flowchart 16 Extended Programming: Quick View; Pacing and Distribution

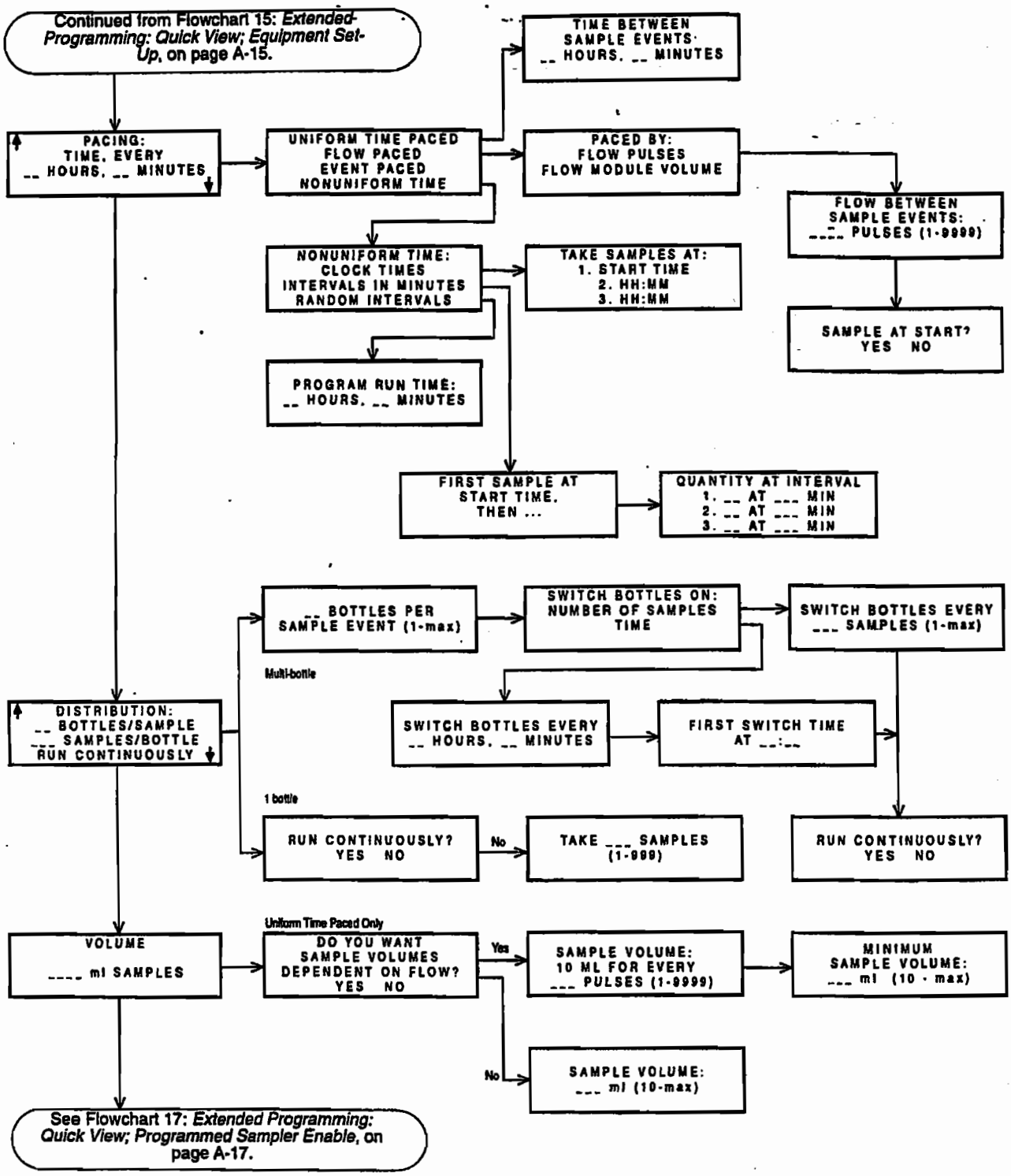

Flowchart 17 Extended Programming: Quick View; Programmed Sampler Enable

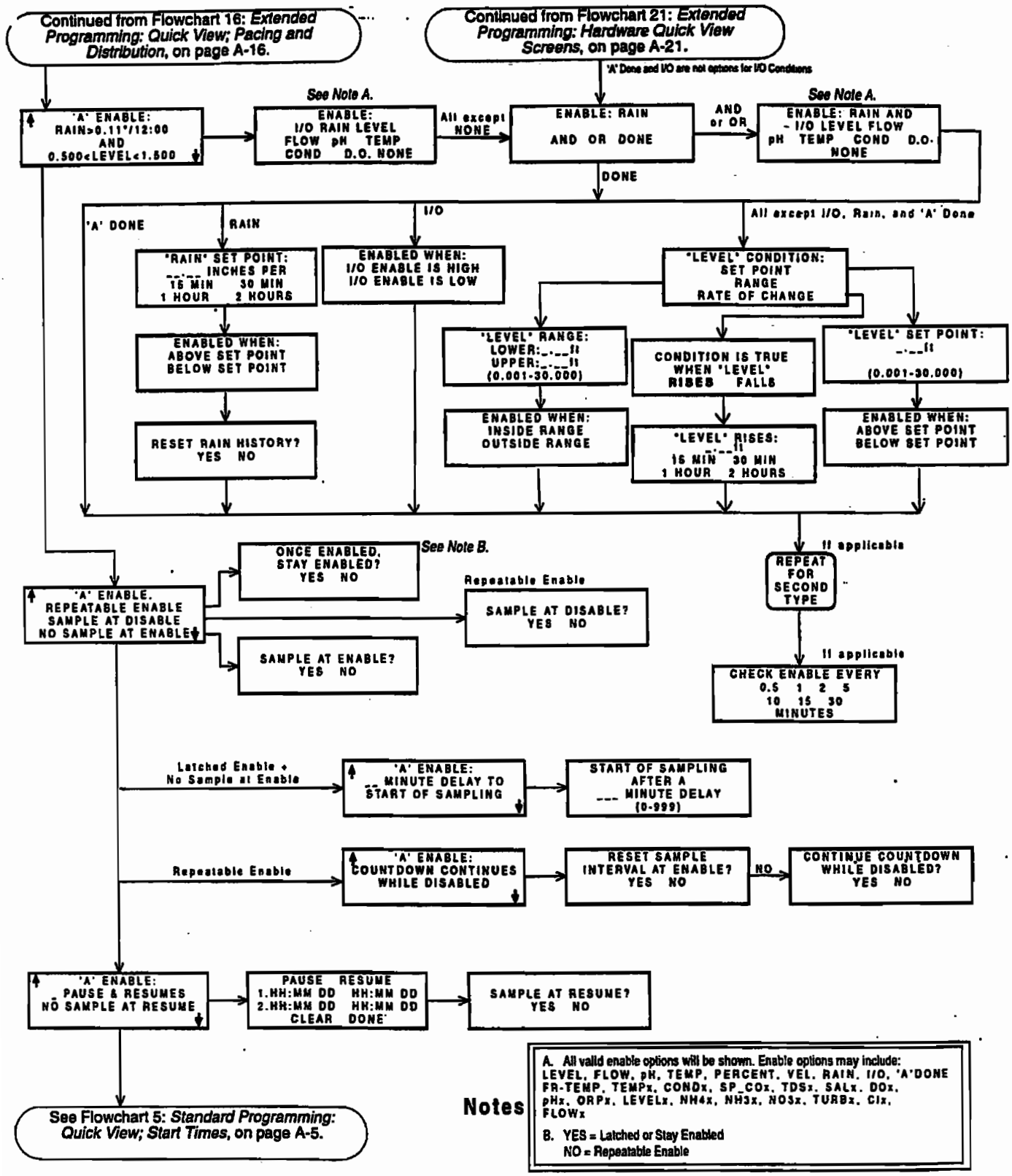

Notes

A. All valid enable options will be shown. Enable options may include: LEVEL, FLOW, pH, TEMP, PERCENT, VEL, RAIN, I/O, 'A'DONE FR-TEMP, TEMPx, CONDx, SP_COx, TDSx, SALx, DOx, pHx, ORPx, LEVELx, NH4x, NH3x, NO3x, TURBx, Clx, FLOWx

B. YES = Latched or Stay Enabled
NO = Repeatable Enable

Flowchart 18 Extended Programming: Normal View; Software Options

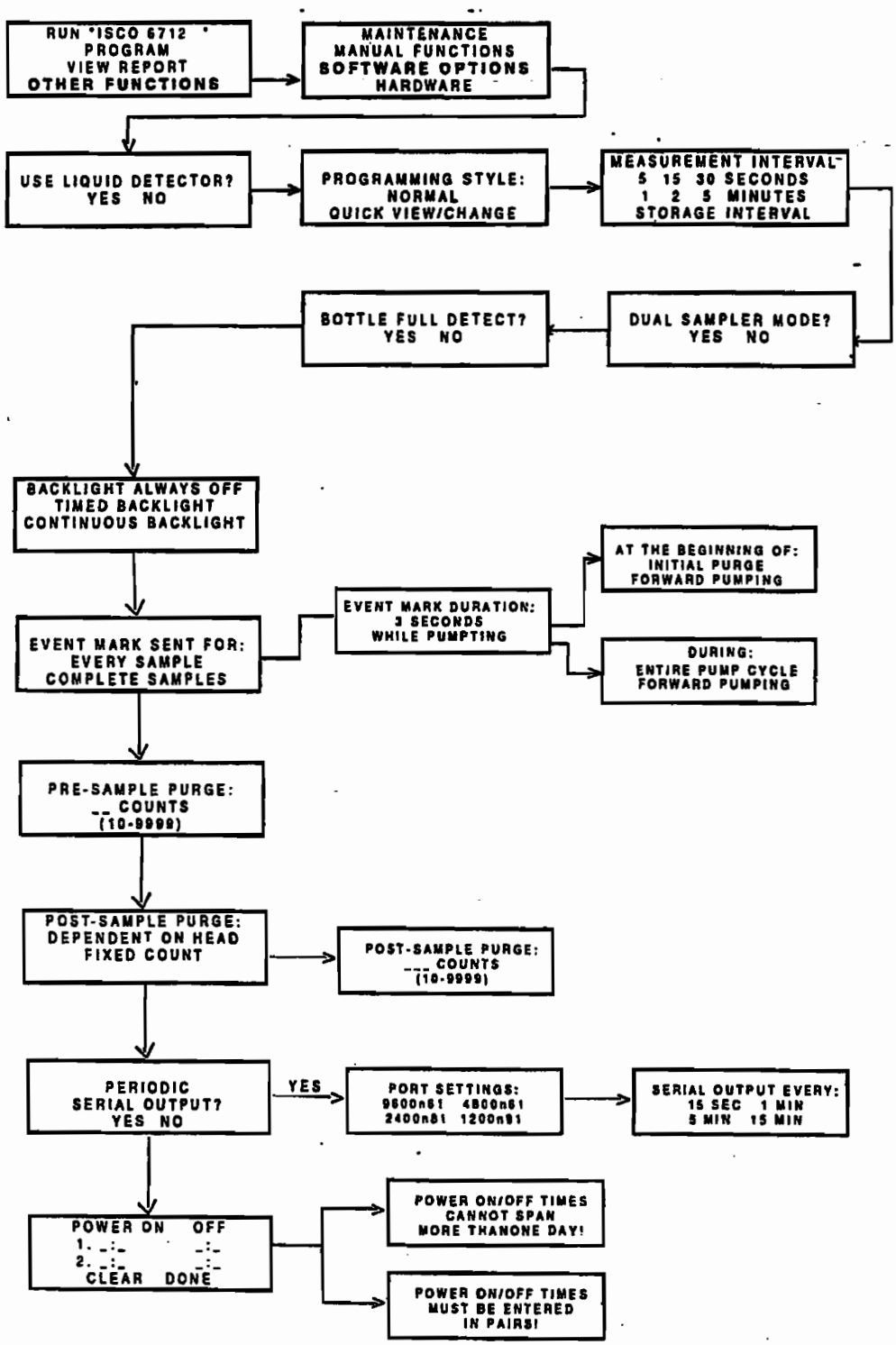

Flowchart 19 Extended Programming: QuickView; Software Options

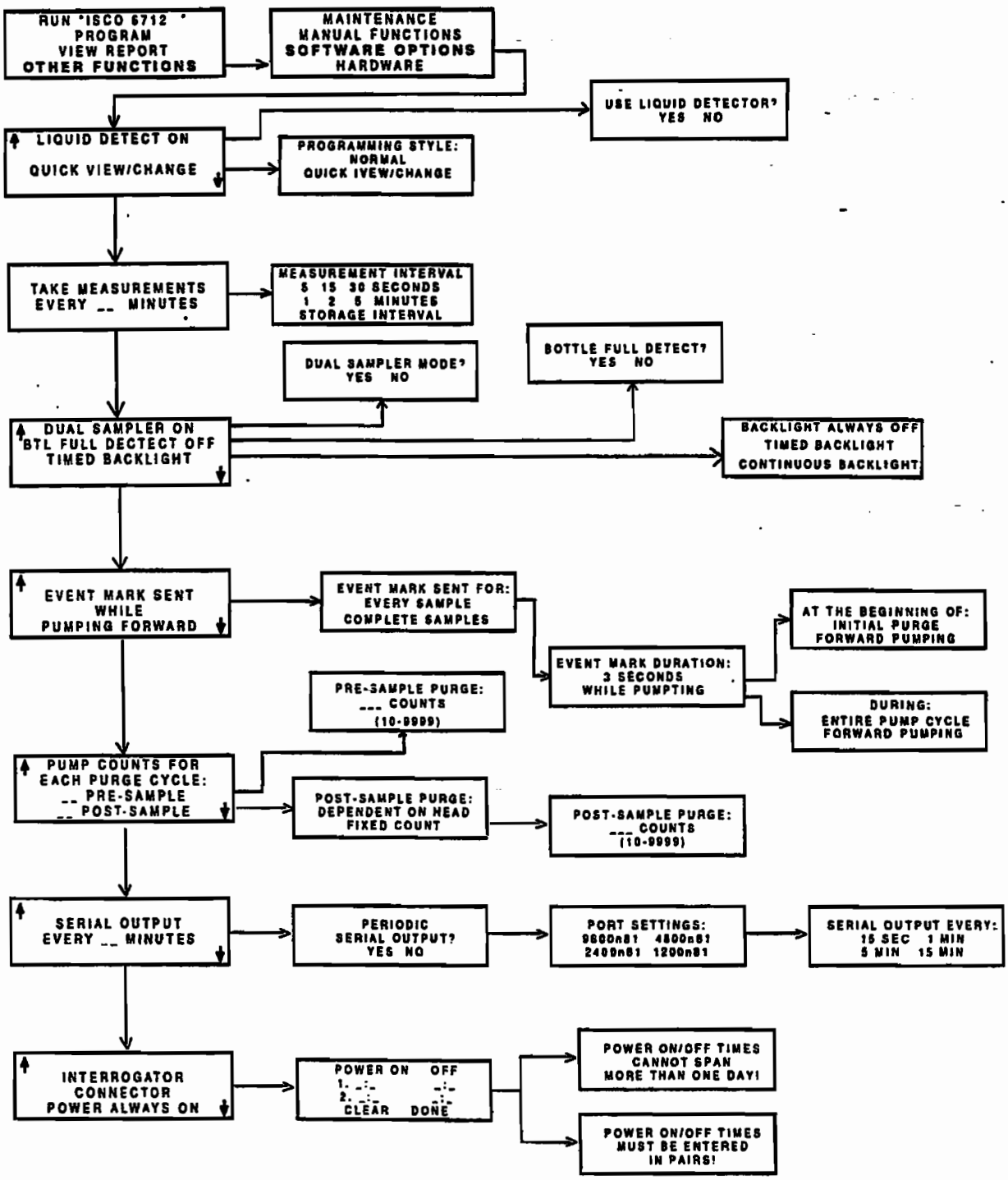

Flowchart 20 Extended Programming: Normal View; Hardware

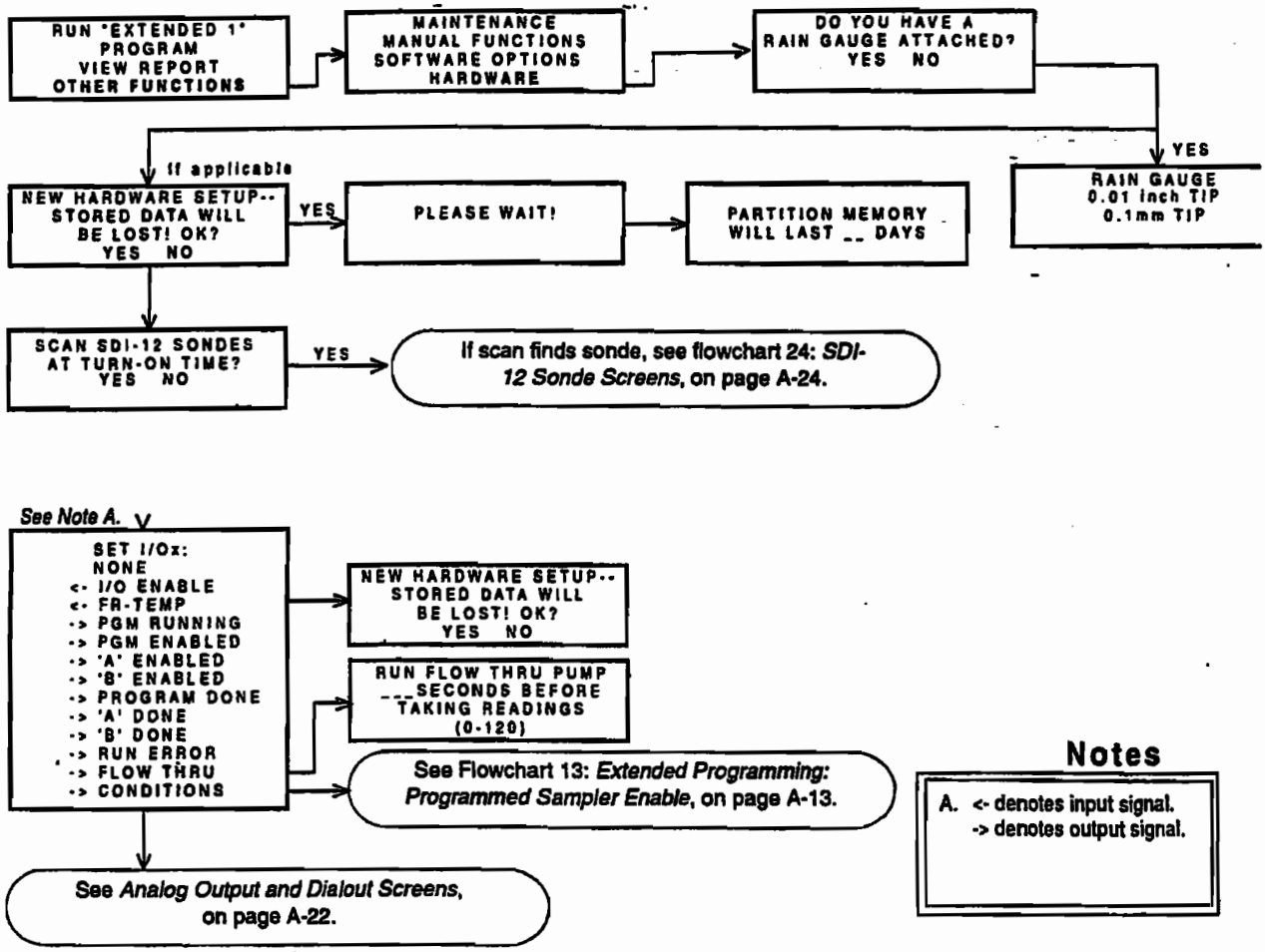

Notes

A. <- denotes input signal.
-> denotes output signal.

Flowchart 21 Extended Programming: Quick View; Hardware

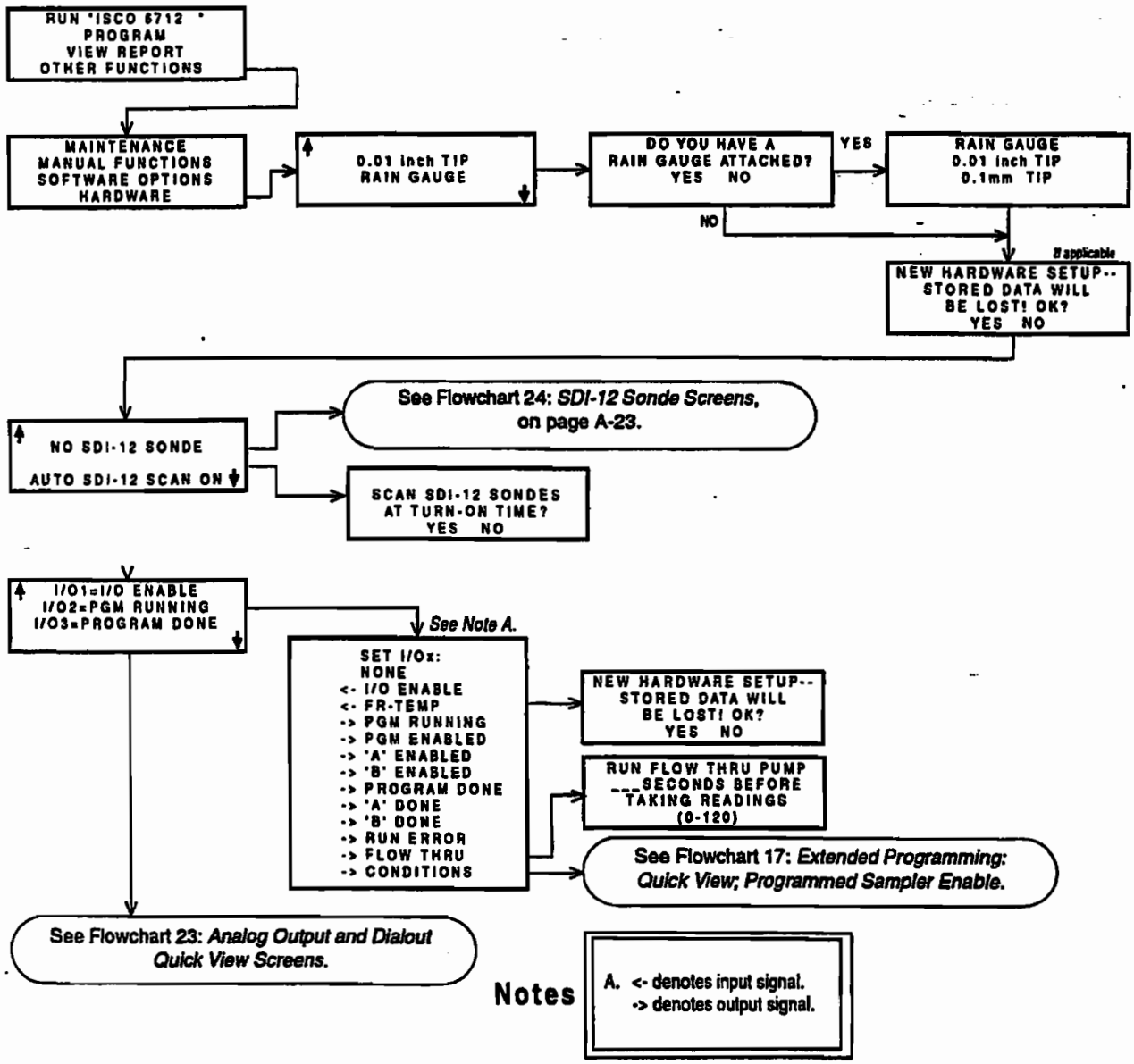

Notes

A. <- denotes input signal.
-> denotes output signal.

Flowchart 22 Analog Output and Dialout Screens

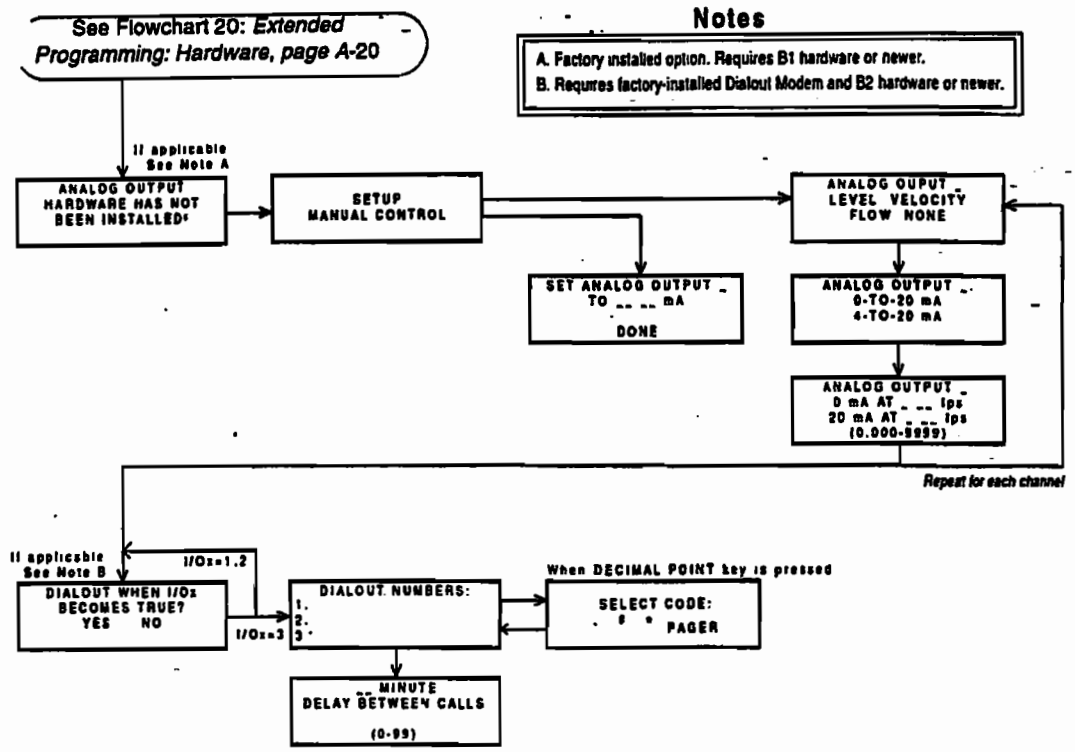

Flowchart 23 Analog Output and Dialout Quick View Screens

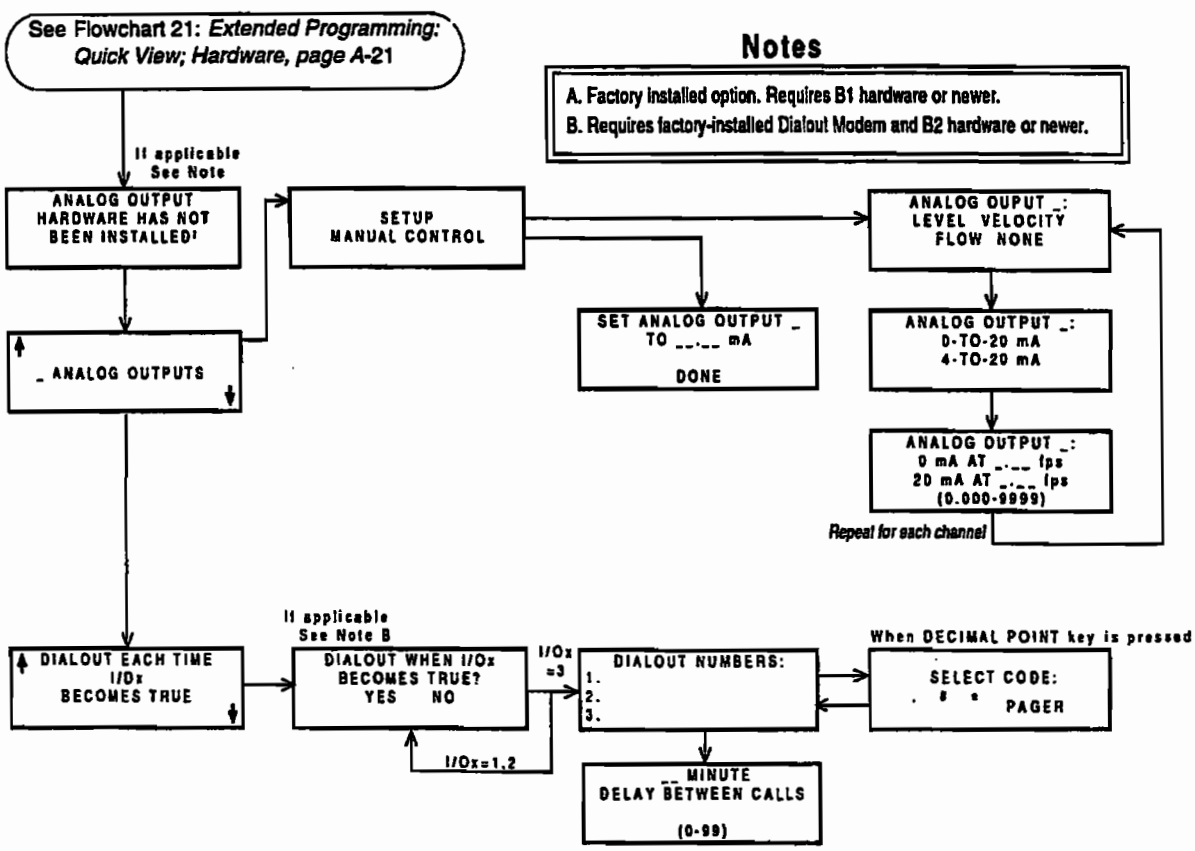

Flowchart 24 SDI-12 Sonde Screens

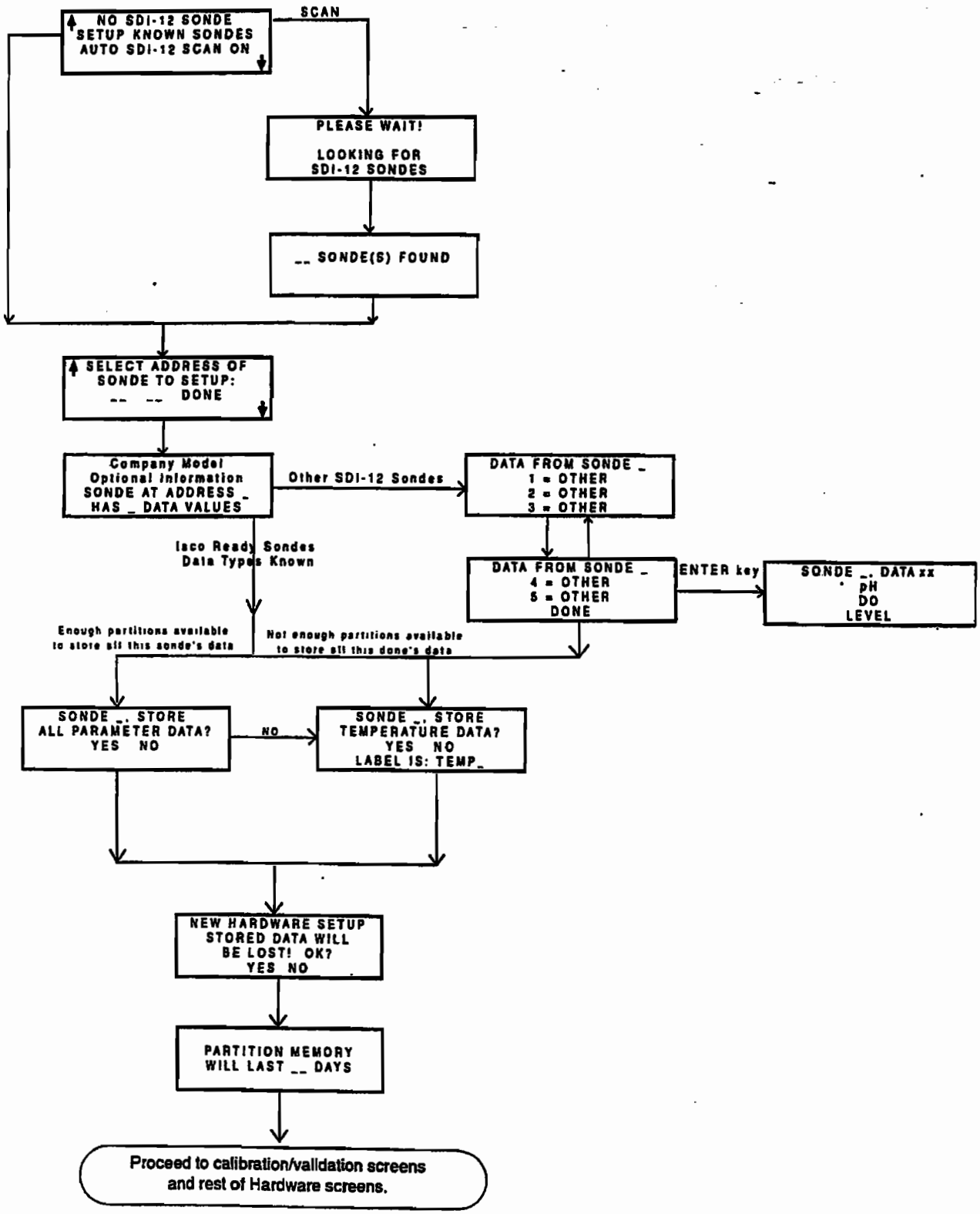

Appendix B Material Safety Data Sheets

Material Safety Data Sheet

Indicating Silica Gel

Identity (Trade Name as Used on Label)

Manufacturer :	MULTISORB TECHNOLOGIES, INC. (formerly Multiform Desiccants, Inc.)	MSDS Number* :	M75
Address:	325 Harlem Road Buffalo, NY 14224	CAS Number* :	
Phone Number (For Information):	716/824-8900	Date Prepared:	January 11, 1999
Emergency Phone Number.	716/824-8900	Prepared By* :	G.E. McKedy

Section 1 - Material Identification and Information

Components - Chemical Name & Common Names (Hazardous Components 1% or greater; Carcinogens 0.1% or greater)	%*	OSHA PEL	ACGIH TLV	OTHER LIMITS RECOMMENDED
Silica Gel SiO_2	99.5	6mg/m^3 (total dust)	10mg/m^3 (total dust)	
Cobalt Chloride	>0.05	0.05mg/m^3 (cobalt metal dust & fume)		
Non-Hazardous Ingredients				
TOTAL	100			

Section 2 - Physical/Chemical Characteristics

Boiling Point	N/A	Specific Gravity (H_2O = 1)	2.1
Vapor Pressure (mm Hg and Temperature	N/A	Melting Point	N/A
Vapor Density (Air =1)	N/A	Evaporation Rate (_____=1)	N/A
Solubility in Water	Insoluble, but will adsorb moisture.	Water Reactive	Not reactive, but will adsorb moisture.
Appearance and Odor	Purple crystals, no odor.		

Section 3 - Fire and Explosion Hazard Data

Flash Point and Methods Used	N/A	Auto-Ignition Temperature	N/A	Flammability Limits in Air % by Volume	N/A	LEL	UEL
Extinguisher Media	Dry chemical, carbon dioxide and foam can be used.						
Special Fire Fighting Procedures	Water will generate heat due to the silica gel which will adsorb water and liberate heat.						
Unusual Fire and Explosion Hazards	When exposed to water, the silica gel can get hot enough to reach the boiling point of water. Flooding with water will reduce the temperature to safe limits.						

Section 4 - Reactivity Hazard Data

STABILITY ☐Stable ☐Unstable	Conditions To Avoid	Moisture and high humidity environments.
Incompatibility (Materials to Avoid)	Water.	
Hazardous Decomposition Products	Carbon dioxide, carbon monoxide, water	
HAZARDOUS POLYMERIZATION ☐May Occur ☐Will Not Occur	Conditions To Avoid	None.

*Optional

Section 5 - Health Hazard Data

PRIMARY ROUTES OF ENTRY	☐ Inhalation ☐ Skin Absorption	☐ Ingestion ☐ Not Hazardous	CARCINOGEN LISTED IN	☐ NTP ☐ IARC Monograph	☐ OSHA ☐ Not Listed
HEALTH HAZARDS	Acute	May cause eye, skin and mucous membrane irritation.			
	Chronic	Prolonged inhalation may cause lung damage.			
Signs and Symptoms of Exposure	Drying and irritation.				
Medical Conditions Generally Aggravated by Exposure	Asthma.				
EMERGENCY FIRST AID PROCEDURES - Seek medical assistance for further treatment, observation and support if necessary.					
Eye Contact	Flush with water for at least 15 minutes.				
Skin Contact	Wash affected area with soap and water.				
Inhalation	Remove affected person to fresh air.				
Ingestion	Drink at least 2 glasses of water.				

Section 6 - Control and Protective Measures

Respiratory Protection (Specify Type)	Use NIOSH approved dust mask or respirator.		
Protective Gloves	Light cotton gloves.	Eye Protection	Safety glasses.
VENTILATION TO BE USED	☐ Local Exhaust	☐ Mechanical (General)	☐ Special
	☐ Other (Specify)		
Other Protective Clothing and Equipment	None.		
Hygienic Work Practices	Avoid raising dust. Avoid contact with skin, eyes and clothing.		

Section 7 - Precautions for Safe Handling and Use/Leak Procedures

Steps to be Taken If Material Is Spilled Or Released	Sweep or vacuum up and place the spilled material in a waste disposal container. Avoid raising dust.
Waste Disposal Methods	Dispose in an approved landfill according to federal, state and local regulations.
Precautions to be Taken In Handling and Storage	Cover promptly to avoid blowing dust. Wash after handling.
Other Precautions and/or Special Hazards	Keep in sealed containers away from moisture. The silica gel will readily adsorb moisture.

101 Christine Drive
Belen, New Mexico 87002
Phone: (505) 864-6691
Fax: (505) 861-2355

SÜD-CHEMIE
Performance Packaging
ISO 9002

MATERIAL SAFETY DATA SHEET -- September 28, 1998
SORB-IT®
Packaged Desiccant

SECTION I -- PRODUCT IDENTIFICATION

Trade Name and Synonyms:	Silica Gel, Synthetic Amorphous Silica, Silicon, Dioxide
Chemical Family:	Synthetic Amorphous Silica
Formula:	$SiO_2.x\ H_2O$

SECTION II -- HAZARDOUS INGREDIENTS

Components in the Solid Mixture

COMPONENT	CAS No	%	ACGIH/TLV (PPM)	OSHA-(PEL)
Amorphous Silica	63231-67-4	>99	PEL - 20 (RESPIRABLE), TLV – 5	LIMIT – NONE, HAZARD - IRRITANT

Synthetic amorphous silica is not to be confused with crystalline silica such as quartz, cristobalite or tridymite or with diatomaceous earth or other naturally occurring forms of amorphous silica that frequently contain crystalline forms.

This product is in granular form and packed in bags for use as a desiccant. Therefore, no exposure to the product is anticipated under normal use of this product. Avoid inhaling desiccant dust.

SECTION III -- PHYSICAL DATA

Appearance and Odor:	White granules; odorless.
Melting Point:	>1600 Deg C; >2900 Deg F
Solubility in Water:	Insoluble.
Bulk Density:	>40 lbs./cu. ft.
Percent Volatile by Weight @ 1750 Deg F:	<10%.

101 Christine Drive
Belen, New Mexico 87002
Phone: (505) 864-6691
Fax: (505) 861-2355

SÜD-CHEMIE
Performance Packaging
ISO 9002

MATERIAL SAFETY DATA SHEET – September 28, 1998
SORB-IT®
Packaged Desiccant

SECTION IV -- FIRE EXPLOSION DATA

Fire and Explosion Hazard - Negligible fire and explosion hazard when exposed to heat or flame by reaction with incompatible substances.

Flash Point - Nonflammable.

Firefighting Media - Dry chemical, water spray, or foam. For larger fires, use water spray fog or foam.

Firefighting - Nonflammable solids, liquids, or gases: Cool containers that are exposed to flames with water from the side until well after fire is out. For massive fire in enclosed area, use unmanned hose holder or monitor nozzles; if this is impossible, withdraw from area and let fire burn. Withdraw immediately in case of rising sound from venting safety device or any discoloration of the tank due to fire.

SECTION V – HEALTH HAZARD DATA

Health hazards may arise from inhalation, ingestion, and/or contact with the skin and/or eyes. Ingestion may result in damage to throat and esophagus and/or gastrointestinal disorders. Inhalation may cause burning to the upper respiratory tract and/or temporary or permanent lung damage. Prolonged or repeated contact with the skin, in absence of proper hygiene, may cause dryness, irritation, and/or dermatitis. Contact with eye tissue may result in irritation, burns, or conjunctivitis.

First Aid (Inhalation) - Remove to fresh air immediately. If breathing has stopped, give artificial respiration. Keep affected person warm and at rest. Get medical attention immediately.

First Aid (Ingestion) - If large amounts have been ingested, give emetics to cause vomiting. Stomach siphon may be applied as well. Milk and fatty acids should be avoided. Get medical attention immediately.

First Aid (Eyes) - Wash eyes immediately and carefully for 30 minutes with runningwater.

101 Christine Drive
Belen, New Mexico 87002
Phone: (505) 864-6691
Fax: (505) 861-2355

SÜD-CHEMIE
Performance Packaging
ISO 9002

MATERIAL SAFETY DATA SHEET -- September 28, 1998
SORB-IT®
Packaged Desiccant

NOTE TO PHYSICIAN: This product is a desiccant and generates heat as it adsorbs water. The used product can contain material of hazardous nature. Identify that material and treat accordingly.

SECTION VI – REACTIVITY DATA

Reactivity - Silica gel is stable under normal temperatures and pressures in sealed containers. Moisture can cause a rise in temperature which may result in a burn.

SECTION VII --SPILL OR LEAK PROCEDURES

Notify safety personnel of spills or leaks. Clean-up personnel need protection against inhalation of dusts or fumes. Eye protection is required. Vacuuming and/or wet methods of cleanup are preferred. Place in appropriate containers for disposal, keeping airborne particulates at a minimum.

SECTION VIII -- SPECIAL PROTECTION INFORMATION

Respiratory Protection - Provide a NIOSH/MSHA jointly approved respirator in the absence of proper environmental control. Contact your safety equipment supplier for proper mask type.

Ventilation - Provide general and/or local exhaust ventilation to keep exposures below the TLV. Ventilation used must be designed to prevent spots of dust accumulation or recycling of dusts.

Protective Clothing - Wear protective clothing, including long sleeves and gloves, to prevent repeated or prolonged skin contact.

Eye Protection - Chemical splash goggles designed in compliance with OSHA regulations are recommended. Consult your safety equipment supplier.

101 Christine Drive
Belen, New Mexico 87002
Phone: (505) 864-6691
Fax: (505) 861-2355

SÜD-CHEMIE
Performance Packaging
ISO 9002

MATERIAL SAFETY DATA SHEET -- September 28, 1998
SORB-IT®
Packaged Desiccant

SECTION IX -- SPECIAL PRECAUTIONS

Avoid breathing dust and prolonged contact with skin. Silica gel dust causes eye irritation and breathing dust may be harmful.

* No Information Available

HMIS (Hazardous Materials Identification System) for this product is as follows:

Health Hazard	0
Flammability	0
Reactivity	0
Personal Protection	HMIS assigns choice of personal protective equipment to the customer, as the raw material supplier is unfamiliar with the condition of use.

The information contained herein is based upon data considered true and accurate. However, United Desiccants makes no warranties expressed or implied, as to the accuracy or adequacy of the information contained herein or the results to be obtained from the use thereof. This information is offered solely for the user's consideration, investigation and verification. Since the use and conditions of use of this information and the material described herein are not within the control of United Desiccants, United Desiccants assumes no responsibility for injury to the user or third persons. The material described herein is sold only pursuant to United Desiccants' Terms and Conditions of Sale, including those limiting warranties and remedies contained therein. It is the responsibility of the user to determine whether any use of the data and information is in accordance with applicable federal, state or local laws and regulations.

Appendix C General Safety Procedures

The safety of the personnel who use the 6712 is a critical consideration. The following procedures, applicable to working in and around manholes and sewers, are those used by Black & Veatch, a respected consulting firm, and are published here by their permission.

"Field personnel must keep safety uppermost in their minds at all times. When working above ground, rules of common sense and safety prevail. However, when entering manholes, strict safety procedures must be observed. Failure to do so could jeopardize not only your own life, but also the lives of other crew members.

WARNING

The 6712 samplers have not been approved for use in hazardous locations as defined by the National Electrical Code.

CAUTION

Before you install any sampler, you must take the proper safety precautions. The following discussion of safety procedures offers only general guidelines. Each situation in which you install a sampler varies. You must take into account the individual circumstances of each installation.

Additional safety considerations, other than those discussed here, may be required. Check applicable guidelines, codes, and regulations of federal, state, city, and county agencies.

"1. **Hazards.** There are many hazards connected with entering manholes. Some of the most common hazards are:

"**Adverse Atmosphere.** The manhole may contain flammable or poisonous gases or the atmosphere may be deficient in oxygen. Forced ventilation may be necessary.

"**Deteriorated Rungs.** Manhole steps may be corroded and not strong enough to support a man. It may be difficult to inspect the rungs because of poor lighting.

"**Traffic.** Whenever manholes are located in the traveled way, barricades and warning devices are essential to direct traffic away from an open manhole.

"**Falling Object.** Items placed near the manhole opening may fall and injure a worker in the manhole.

"**Sharp Edges.** Sharp edges of items in or near a manhole may cause cuts or bruises.

"**Lifting Injuries.** Unless proper tools are used to remove manhole covers, back injuries or injuries to hands or feet may result.

"2. **Planning.** Advance planning should include arrangements for test equipment, tools, ventilating equipment, protective clothing, traffic warning devices, ladders, safety harness, and adequate number of personnel. Hasty actions may result in serious injuries. Time spent in the manhole should be kept to a minimum.

"3. **Adverse Atmosphere.** [Refer to the table of *Hazardous Gases* at the end of this appendix.] Before workers enter a manhole, tests should be made for explosive atmosphere, presence of hydrogen sulfide, and oxygen deficiency. Combustible or toxic vapors may be heavier than air, so the tests on the atmosphere must be run at least 3/4 of the way down the manhole.

"Whenever adverse atmosphere is encountered, forced ventilation must be used to create safe conditions. After the ventilating equipment has been operated for a few minutes, the atmosphere in the manhole should be retested before anyone enters the manhole.

"When explosive conditions are encountered, the ventilating blower should be placed upwind to prevent igniting any gas that is emerging from the opening. When a gasoline engine blower is used, it must be located so that exhaust fumes cannot enter the manhole.

"If testing equipment is not available, the manhole should be assumed to contain an unsafe atmosphere and forced ventilation must be provided. It should never be assumed that a manhole is safe just because there is no odor or the manhole has been entered previously.

"4. **Entering Manholes.** Since the top of the manhole is usually flush with the surrounding surface, there may not be anything for the person who is entering the manhole to grab on to steady himself. Persons who are entering manholes should not be permitted to carry anything in their hands as they enter the manhole, to ensure that their hands will be free to hold on or grab if they slip. A good method for entering a manhole is to sit on the surface facing the manhole steps or ladder, with the feet in the hole and the arms straddling the opening for support. As the body slides forward and downward, the feet can engage a rung, and the back can rest against the opposite side of the opening. If there is any doubt about the soundness of the manhole steps, a portable ladder should be used.

"A person should never enter a manhole unless he is wearing personal safety equipment, including a safety harness and a hard hat. Two persons should be stationed at the surface continuously while anyone is working inside a manhole, to lift him out if he is overcome or injured. One man cannot lift an unconscious man out of a manhole.

The persons stationed at the surface should also function as guards to keep people and vehicles away from the manhole opening. To avoid a serious injury, a person should not be lifted out of a manhole by his arm unless it is a dire emergency.

"When more than one person must enter a manhole, the first person should reach the bottom and step off the ladder before the next one starts down. When two men climb at the same time, the upper one can cause the lower one to fall by slipping or stepping on his fingers.

"5. **Traffic Protection.** In addition to traffic cones, markers, warning signs, and barricades, a vehicle or a heavy piece of equipment should be placed between the working area and oncoming traffic. Flashing warning signals should be used to alert drivers and pedestrians. Orange safety vests should be worn by personnel stationed at the surface when the manhole is located in a vehicular traffic area.

"6. **Falling Object.** All loose items should be kept away from the manhole opening. This applies to hand tools as well as stones, gravel and other objects.

"7. **Removing the Covers.** Manhole covers should be removed with a properly designed hook. Use of a pick ax, screwdriver, or small pry bar may result in injury. A suitable tool can be made from 3/4-inch round or hex stock. Two inches of one end should be bent at a right angle and the other end should be formed into a D-handle wide enough to accommodate both hands. Even with this tool, care must be exercised to prevent the cover from being dropped on the toes. The 2-inch projection should be inserted into one of the holes in the cover, the handle grasped with both hands, and the cover lifted by straightening the legs which have been slightly bent at the knees.

"8. **Other Precautions.** Other precautions which should be taken when entering a manhole are:

- Wear a hard hat.
- Wear coveralls or removable outer garment that can be readily removed when the work is completed.
- Wear boots or nonsparking safety shoes.
- Wear rubberized or waterproof gloves.
- Wear a safety harness with a stout rope attached.
- Do not smoke.
- Avoid touching yourself above the collar until you have cleaned your hands.

"9. **Emergencies.** Every member of the crew should be instructed on procedures to be followed in cases of an emergency. It is the duty of each crew chief to have a list of emergency phone numbers, including the nearest hospital and ambulance service, police precinct, fire station, and rescue or general emergency number.

"10. **Field Equipment.** The following equipment will be available for use:

Blowers	Gloves
Breathing apparatus	Hard Hats
Coverall	Harnesses
First aid kits	Manhole irons
Emergency flashers	Pick axes
Flashlight	Rain slickers
Mirror	Ropes
Gas detectors	Safety vests
Gas masks	Traffic cones
Waders"	

Lethal Atmospheres in Sewers

The following is an article written by Dr. Richard D. Pomeroy, and published in the October 1980 issue of "Deeds & Data" of the WPCF. Dr. Pomeroy is particularly well known for his studies, over a period of nearly 50 years, in the field of the control of hydrogen sulfide and other odors in sewers and treatment plants. He has personally worked in a great many functioning sewers. In the earlier years he did so, he admits, with little knowledge of the grave hazards to which he exposed himself.

"It is gratifying that the subject of hazards to people working in sewers is receiving much more attention than in past years, and good safety procedures are prescribed in various publications on this subject. It is essential that people know and use correct procedures.

"It is less important to know just what the hazardous components of sewer atmospheres are, as safety precautions should in general be broadly applicable, but there should be a reasonable understanding of this subject. It is disturbing to see statements in print that do not reflect true conditions.

"One of the most common errors is the assumption that people have died from a lack of oxygen. The human body is able to function very well with substantially reduced oxygen concentrations. No one worries about going to Santa Fe, New Mexico, (elev. 2,100 meters), where the partial pressure of oxygen is equal to 16.2% (a normal atmosphere is about 21%) oxygen. "When first going there, a person may experience a little 'shortness of breath' following exercise.

"People in good health are not afraid to drive over the high passes in the Rocky Mountains. At Loveland Pass, oxygen pressure is 13.2% of a normal atmosphere. At the top of Mt. Whitney, oxygen is equal to 12.2%t. Many hikers go there, and to higher peaks as well. After adequate acclimation, they may climb to the top of Mt. Everest, where oxygen is equal to only 6.7%.

"The lowest oxygen concentrations that I have observed in a sewer atmosphere was 13 percent. It was in a sealed chamber, near sea level, upstream from an inverted siphon on a metropolitan trunk. A man would be foolish to enter the chamber. Without ventilation, he might die, but not from lack of oxygen.

"It seems unlikely that anyone has ever died in a sewer from suffocation, that is, a lack of oxygen. Deaths have often been attributed to 'asphyxiation.' This is a word which, according to the dictionary, is used to mean death from an atmosphere that does not support life. The word has sometimes been misinterpreted as meaning suffocation, which is only one kind of asphyxiation.

"In nearly all cases of death in sewers, the real killer is hydrogen sulfide. It is important that this fact be recognized. Many cities diligently test for explosive gases, which is very important, and they may measure the oxygen concentration which usually is unimportant, but they rarely measure H2S. Death has occurred where it is unlikely that there was any measurable reduction in the oxygen concentration. Waste water containing 2 mg per liter of dissolved sulfide, and at a pH of 7.0, can produce, in a chamber with high turbulence, a concentration of 300 PPM H2S, in the air. This is considered to be a lethal concentration. Many people have died from H2S, not only in sewers and industries, but also from swamps and from hot springs. In one resort area, at least five persons died from H2S poisoning before the people were ready to admit that H2S is not a therapeutic agent. Hardly a year passes in the US. without a sewer fatality from H2S as well as deaths elsewhere in the world.

"The presence of H2S in a sewer atmosphere is easily determined. A bellows-and-ampoule type of tester is very satisfactory for the purpose, even though it is only crudely quantitative. When using a tester of this type, do not bring the air to the ampoule by way of a tube, as this may change the H2S concentration. Hang the ampoule in the air to be tested, with a suction tube to the bulb or bellows.

"Lead acetate paper is very useful as a qualitative indicator. It cannot be used to estimate the amount of sulfide, but it will quickly turn black in an atmosphere containing only a tenth of a lethal concentration.

"Electrodes or other similar electrical indicating devices for H2S in air have been marketed. Some of them are known to be unreliable, and we know of none that have proved dependable. Do not use one unless you check it at frequent intervals against air containing known H2S concentrations. A supposed safety device that is unreliable is worse than none at all.

"Remember that the nose fails, too, when it comes to sensing dangerous concentrations of H_2S.

"Various other toxic gases have been mentioned in some publications. It is unlikely that any person has been asphyxiated in a sewer by any of those other gases, except possibly chlorine. The vapor of gasoline and other hydrocarbons is sometimes present in amounts that could cause discomfort and illness, but under that condition, the explosion hazard would be far more serious. The explosimeter tests, as well as the sense of smell, would warn of the danger. Pipelines in chemical plants might contain any number of harmful vapors. They, too, are sensed by smell and explosimeter tests if they get into the public sewer. Such occurrences are rare.

"The attempt to instill a sense of urgency about real hazards is diluted if a man is told to give attention to a long list of things that in fact are irrelevant.

"Be very careful to avoid high H2S concentrations, flammable atmospheres, and hazards of physical injuries. Remember that much H2S may be released by the stirring up of sludge in the bottom of a structure. Obey your senses in respect to irritating gases, such as chlorine (unconsciousness comes suddenly from breathing too much). Be cautious about strange odors. Do not determine percent oxygen in the air. There is a danger that the result will influence a man's thinking about the seriousness of the real hazards. Most important, use ample ventilation, and do not enter a potentially hazardous structure except in a good safety harness with two men at the top who can lift you out."

Table 2 Hazardous Gases

Gas	Chemical Formula	Common Properties	Specific Gravity or Vapor Density Air = 1	Physiological Effect*	Max Safe 60 Min. Exposure ppm	Max. Safe 8 Hour Exposure ppm	Explosive Range (% by vol. in air.) Limits lower/upper	Likely Location of Highest Concentration	Most Common Sources	Simplest and Cheapest Safe Method of Testing
Ammonia	NH_3	Irritant and poisonous. Colorless with characteristic odor.	0.60	Causes throat and eye irritation at 0.05%, coughing at 0.17%. Short exposure at 0.5% to 1% fatal.	300 to 500	85	16 25	Near top. Concentrates in closed upper spaces	Sewers, chemical feed rooms.	Detectable odor at low concentrations
Benzene	C_6H_6	Irritant, colorless anesthetic	2.77	Slight symptoms after several hours exposure at 0.16% to 0.32%. 2% rapidly fatal.	3,000 to 5,000	25	1.3 7.1	At bottom.	Industrial wastes, varnish, solvents.	Combustible gas indicator
Carbon Bisulfide	CS_2	Nearly odorless when pure, colorless. anesthetic. Poisonous.	2.64	Very poisonous, irritating, vomiting, convulsions, psychic disturbance.	—	15	1.3 44.0	At bottom	An insecticide	Combustible gas indicator
Carbon Dioxide	CO_2	Asphyxiant. Colorless, odorless. When breathed in large quantities, may cause acid taste. Non-flammable. Not generally present in dangerous amounts unless an oxygen deficiency exists.	1.53	Cannot be endured at 10% more than a few minutes, even if subject is at rest and oxygen content is normal. Acts on respiratory nerves.	40,000 to 60,000	5,000	— —	At bottom; when heated may stratify at points above bottom.	Products of combustion, sewer gas, sludge. Also issues from carbonaceous strata.	Oxygen deficiency indicator
Carbon Monoxide	CO	Chemical asphyxiant. Colorless, odorless, tasteless. Flammable. Poisonous.	0.97	Combines with hemoglobin of blood. Unconsciousness in 30 min. at 0.2% to 0.25%. Fatal in 4 hours at 0.1%. Headache in few hours at 0.02%.	400	50	12.5 74.0	Near top, especially if present with illuminating gas.	Manufactured gas, flue gas, products of combustion, motor exhausts. Fires of almost any kind.	CO ampoules.
Carbon Tetra-Chloride	CCl_4	Heavy, ethereal odor.	5.3	Intestinal upset, loss of consciousness, possible renal damage, respiratory failure.	1,000 to 1,500	100	— —	At bottom.	Industrial wastes, solvent, cleaning	Detectable odor at low concentrations.
Chlorine	Cl_2	Irritant. Yellow-green color. Choking odor detectable in very low concentrations. Non-flammable.	2.49	Irritates respiratory tract. Kills most animals in a very short time at 0.1%.	4	1	— —	At bottom.	Chlorine cylinder and feed line leaks.	Detectable odor at low concentrations.
Formaldehyde	CH_2O	Colorless, pungent suffocating odor.	1.07	Irritating to the nose.	—	10	7.0 73.0	Near bottom.	Incomplete combustion of organics. Common air pollutant, fungicide.	Detectable odor.
Gasoline	C_5H_{12} to C_9H_{20}	Volatile solvent. Colorless. Odor noticeable at 0.03%. Flammable.	3.0 to 4.0	Anesthetic effects when inhaled. Rapidly fatal at 2.4%. Dangerous for short exposure at 1.1 to 2.2%.	4,000 to 7,000	1,000	1.3 6.0	At bottom.	Service stations, garages, storage tanks, houses.	1. Combustible gas indicator. 2. Oxygen deficiency indicator.**
Hydrogen	H_2	Simple asphyxiant. Colorless, odorless, tasteless. Flammable	0.07	Acts mechanically to deprive tissues of oxygen. Does not support life.	—	—	4.0 74.0	At top.	Manufactured gas, sludge digestion tank gas, electrolysis of water. Rarely from rock strata.	Combustible gas indicator.
Hydrogen Cyanide	HCN	Faint odor of bitter almonds. Colorless gas	0.93	Slight symptoms appear upon exposure to 0.002% to 0.004%. 0.3% rapidly fatal.	—	10	6.0 40.0	Near top.	Insecticide and rodenticide.	Detector tube

*Percentages shown represent volume of gas in air.
**For concentration over 0.3%.

Hazardous Gases (Continued)

Gas	Chemical Formula	Common Properties	Specific Gravity or Vapor Density Air = 1	Physiological Effect*	Max Safe 60 Min. Exposure ppm	Max. Safe 8 Hour Exposure ppm	Explosive Range (% by vol. in air.) Limits lower/upper	Likely Location of Highest Concentration	Most Common Sources	Simplest and Cheapest Safe Method of Testing
Hydrogen Sulfide	H_2S	Irritant and poisonous volatile compound. Rotten egg odor in small concentrations. Exposure for 2 to 15 min. at 0.01% impairs sense of smell. Odor not evident at high concentrations. Colorless. Flammable.	1.19	Impairs sense of smell, rapidly as concentration increases. Death in few minutes at 0.2%. Exposure to 0.07 to 0.1% rapidly causes acute poisoning. Paralyzes respiratory center.	200 to 300	20	4.3 45.0	Near bottom, but may be above bottom if air is heated and highly humid.	Coal gas, petroleum, sewer gas. Fumes from blasting under some conditions. Sludge gas.	1. H_2S Ampoule. 2. 5% by weight lead acetate solution.
Mathane	CH_4	Simple asphyxiant. Colorless, odorless, tasteless, flammable.	0.55	Acts mechanically to deprive tissues of oxygen. Does not support life.	Probably no limit, provided oxygen percentage is sufficient for life.	—	5.0 15.0	At top, increasing to certain depth.	Natural gas, sludge gas, manufactured gas, sewer gas. Strata of sedimentary origin. In swamps or marshes.	1. Combustible gas indicator 2. Oxygen deficiency indicator.
Nitrogen	N_2	Simple asphyxiant. Colorless, tasteless. Non-flammable. Principal constituent of air. (about 79%).	0.97	Physiologically inert.	—	—	— —	Near top, but may be found near bottom.	Sewer gas. sludge gas. Also issues from some rock strata.	Oxygen deficiency indicator.
Nitrogen Oxides	NO N_2O NO_2	Colorless Colorless, sweet odor. Reddish-brown. Irritating odor. Deadly poison	1.04 1.53 1.58	60 to 150 ppm cause irritation and coughing. Asphyxiant. 100 ppm dangerous. 200 ppm fatal.	50	10	— —	Near bottom.	Industrial wastes. Common air pollutant.	NO_2 detector tube.
Oxygen	O_2	Colorlass, odorless, tasteless. Supports combustion.	1.11	Normal air contains 20.8% of O_2. Man can tolerate down to 12%. Minimum safe 8 hour exposure, 14 to 16%. Below 10%, dangerous to life. Below 5 to 7% probably fatal.	—	—	— —	Variable at different levels.	Oxygen depletion from poor ventilation and absorption, or chemical consumption of oxygen.	Oxygen deficiency indicator.
Ozone	O_3	Irritant and poisonous. Strong electrical odor. Strong oxidizer. Colorless. At 1 ppm, strong sulfur-like odor.	1.66	Max. naturally occurring level is 0.04 ppm. 0.05 ppm causes irritation of eyes and nose. 1 to 10 ppm causes headache, nausea; can cause coma. Symptoms similar to radiation damage.	0.08	0.04	— —	Near bottom.	Where ozone is used for disinfection.	Detectable odor at 0.015 ppm.
Sludge Gas	—**	Mostly a simple asphyxiant. May be practically odorless, tasteless.	Variable	Will not support life.	No data. Would vary widely with composition.		5.3 19.3	Near top of structure.	From digestion of sludge.	See components.
Sulfur Dioxide	SO_2	Colorless, pungent odor. Suffocating, corrosive, poisonous, non-flammable.	2.26	Inflammation of the eyes. 400 to 500 ppm immediately fatal.	50 to 100	10	— —	At bottom, can combine with water to form sulfurous acid.	Industrial waste, combustion, common air pollutant.	Detectable taste and odor at low concentration.
Toluene	C_5H_{12} to C_9H_{20}	Colorless, benzene-like odor.	3.14	At 200-500 ppm, headache, nausea, bad taste, lassitude.	200	100	1.27 7.0	At bottom.	Solvent.	Combustible gas indicator.
Turpentine	$C_{10}H_{16}$	Colorless, Characteristic odor.	4.84	Eye irritation. Headache, dizziness, nausea, irritation of the kidneys.	—	100		At bottom.	Solvent, used in paint.	1. Detectable odor at low concentrations. 2. Combustible gas indicator.
Xylene	C_8H_{10}	Colorless, flammable	3.66	Narcotic in high concentrations, less toxic than benzene.	—	100	1.1 7.0	At bottom.	Solvent	Combustible gas indicator.

* Percentages shown represent volume of gas in air.

**Mostly methane and carbon dioxide with small amounts of hydrogen, nitrogen, hydrogen sulfide, and oxygen; occasionally traces of carbon monoxide.

Appendix D Replacement Parts

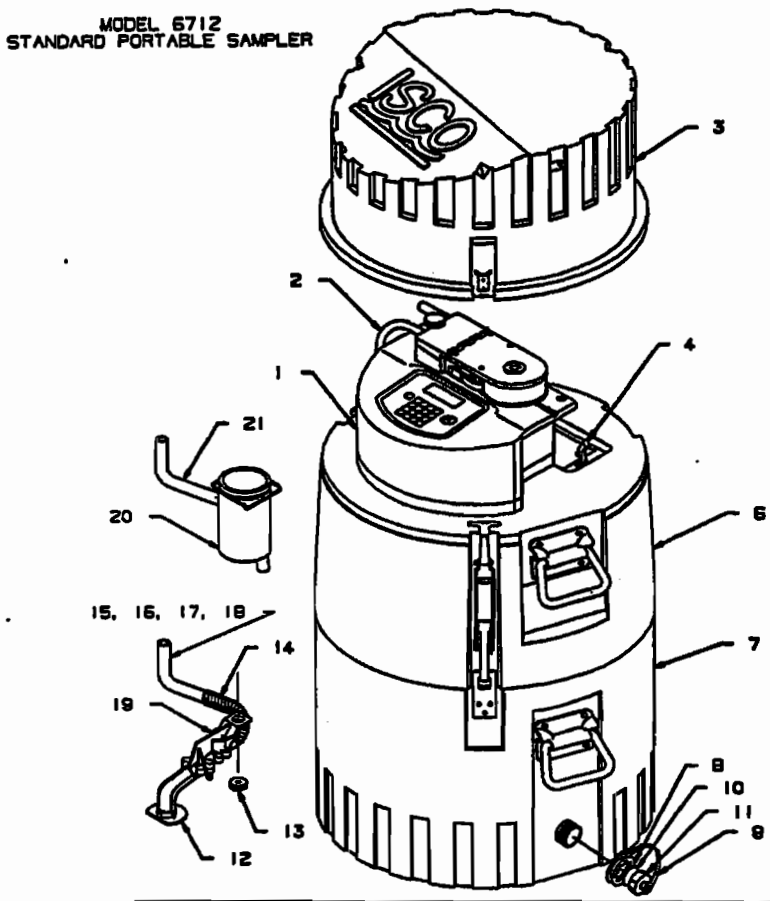

ITEM	INVENTORY NO.	DESCRIPTION
1	609004330	MODEL 6712 CONTROLLER
2	609004157	PUMP TUBE QUICK DISCONNECT
3	609004247	TOP COVER ASSY STD
4	109060503	DRAW LATCH ASSY SMALL
5*	609003098	BULKHEAD FITTING
6	609004246	CENTER SECTION ASSY STD (INCLUDES ITEM 4)
7	609004052	SAMPLE TUB ASSY STD (INCLUDES ITEMS 8-11)
8	209001828	RTNG RING SST .875SFT 1.200
9	609003250	DRAIN CAP STRAP
10	603113032	GASKET CONNECTOR CAP
11	609003294	DRAIN CAP
12	609004020	DIST ARM ASSY BOTTOM
13	602823007	DISTRIBUTOR ARM NUT
14	609003317	SPRING DISTRIBUTOR ARM
15	609003260	DISCHARGE TUBE FOR STANDARD 24 BOTTLE KIT
16	609003262	DISCHARGE TUBE FOR STANDARD 12 BOTTLE KIT
17	609003264	DISCHARGE TUBE FOR STANDARD 8 BOTTLE KIT
18	609003266	DISCHARGE TUBE FOR STANDARD 4 BOTTLE KIT
19	609004019	DIST ARM TOP ASSY
20	609004051	COMPOSITE TUBE GUIDE (FOR STANDARD AND COMPACT)
21	609003271	DISCHARGE TUBE FOR STANDARD 1 BOTTLE KITS
22*	609004194	5 GALLON BOTTLE BASE

*-NOT SHOWN

DWG 60-9002-065

MODEL 6712
COMPACT PORTABLE SAMPLER

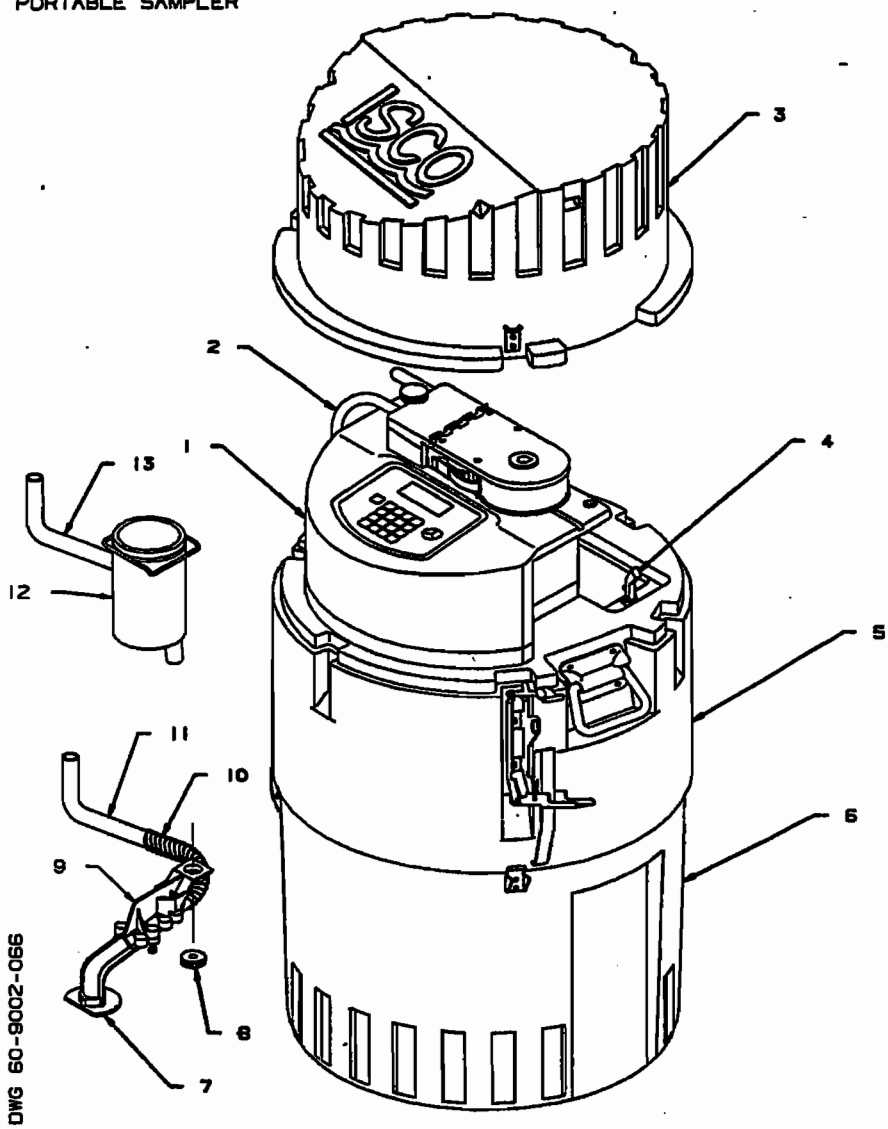

ITEM	INVENTORY NO.	DESCRIPTION
1	609004330	MODEL 6712 CONTROLLER
2	609004157	PUMP TUBE QUICK DISCONNECT
3	609004248	TOP COVER ASSY CMPT
4	108060503	DRAW LATCH ASSY SMALL
5	609004245	CENTER SECTION ASSY CMPT (INCLUDES ITEM 4)
6	603704129	SAMPLE TUB ASSY CMPCT
7	609004020	DIST ARM ASSY BOTTOM
8	602923007	DISTRIBUTOR ARM NUT
9	609004019	DIST ARM ASSY TOP
10	609003317	SPRING DISTRIBUTOR ARM
11	609003257	DISCHARGE TUBE FOR COMPACT 24 & 12 BOTTLE KITS
12	609004051	COMPOSITE TUBE GUIDE (FOR STANDARD AND COMPACT)
13	609003258	DISCHARGE TUBE FOR COMPACT 1 BOTTLE KITS
14*	609003088	BULKHEAD FITTING
15*	603704181	MINI BASE ASSEMBLY

*-NOT SHOWN

MODEL 6712
CONTROLLER - OUTSIDE

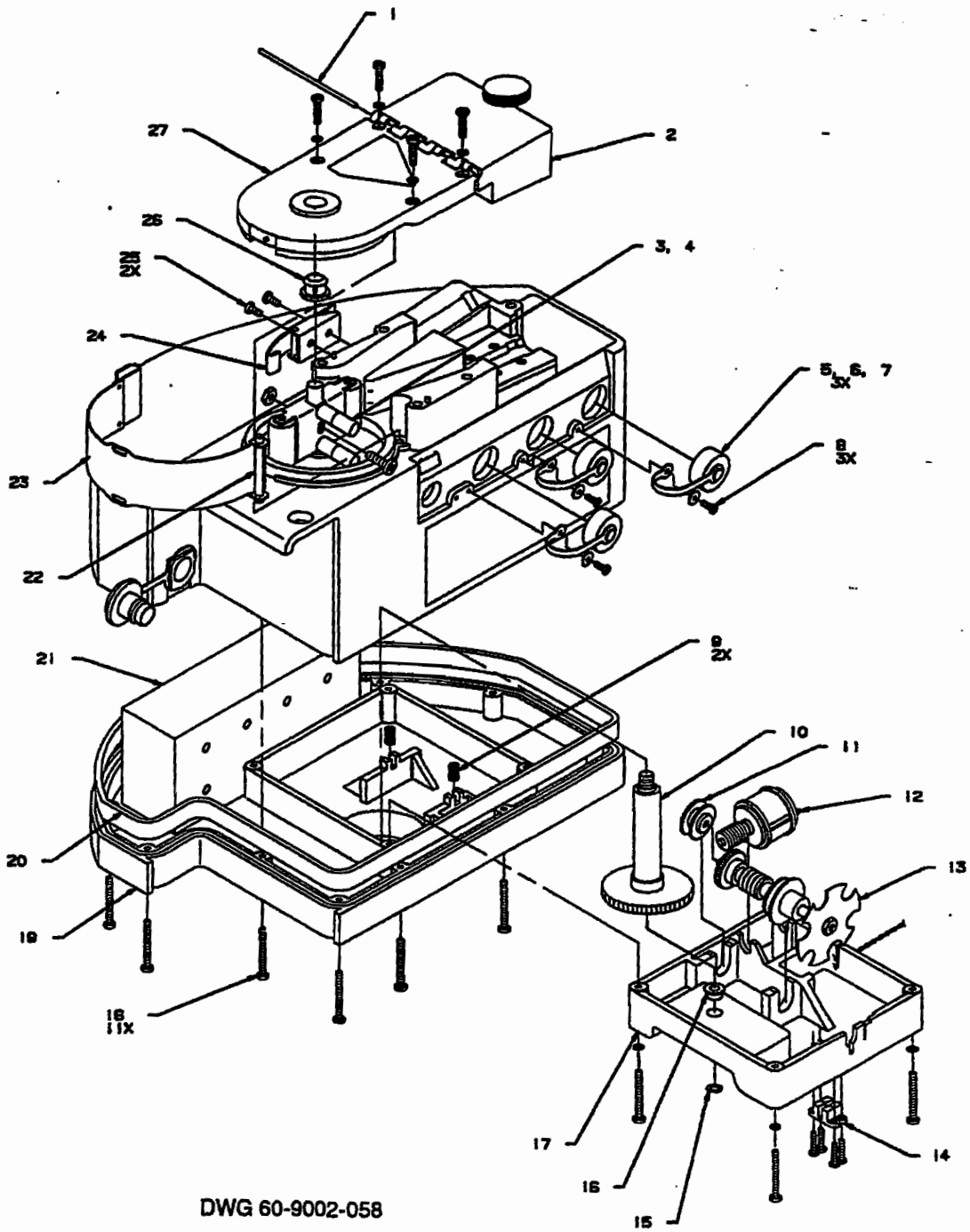

DWG 60-9002-058

ITEM	INVENTORY NO.	DESCRIPTION
1	609003035	PIN HNG .09X3.635
2	609004013	LID ASSY LIQ DET
3	609004009	PMP PADDLE ASSY
4	232916101	NUT S 10-32
5	603113024	CAP CONN PTCTR MDM
6	603113032	GSKT CONN CAP MDM
7	609003291	STRAP CONN CAP
8	231310106	SCR SLFTPG #4X3/8
9	203012203	SPR CPRSN .042WIRE
10	609004016	SFT ASSY DISTR
11	609003040	BSHG .184 ID
12	609004014	DISTR MOT ASSY
13	609004015	SFT ASSY WORM
14	609004114	OPT SNSR ASSY
15	209000900	RTNG RING EXT.21ID
16	201312300	BRG CYL.250ID.380D
17	609003007	PL TOP DISTR (ENV)
18	231014436	SCR PNH 6-32X1 1/8
19	609004011	CONT BOX S/A BOT
20	609003054	GSKT CONT BOX
21	609003518	BOX 2.88X2.33X5.13
22	609003052	PIN HNG .18X2.000
23	609004300	PMP HSG BND ASSY
24	109080300	LCH DRAW SST
25	231311206	SCR SLFTPG #6X3/8
26	603703278	BSHG PMP (ENV)
27	609004285	PMP COV ASSY
*28	202999100	SEAL .625IDX1.000D

NOTE: * ITEM IS NOT SHOWN IN ILLUSTRATION

MODEL 6712
CONTROLLER - INSIDE

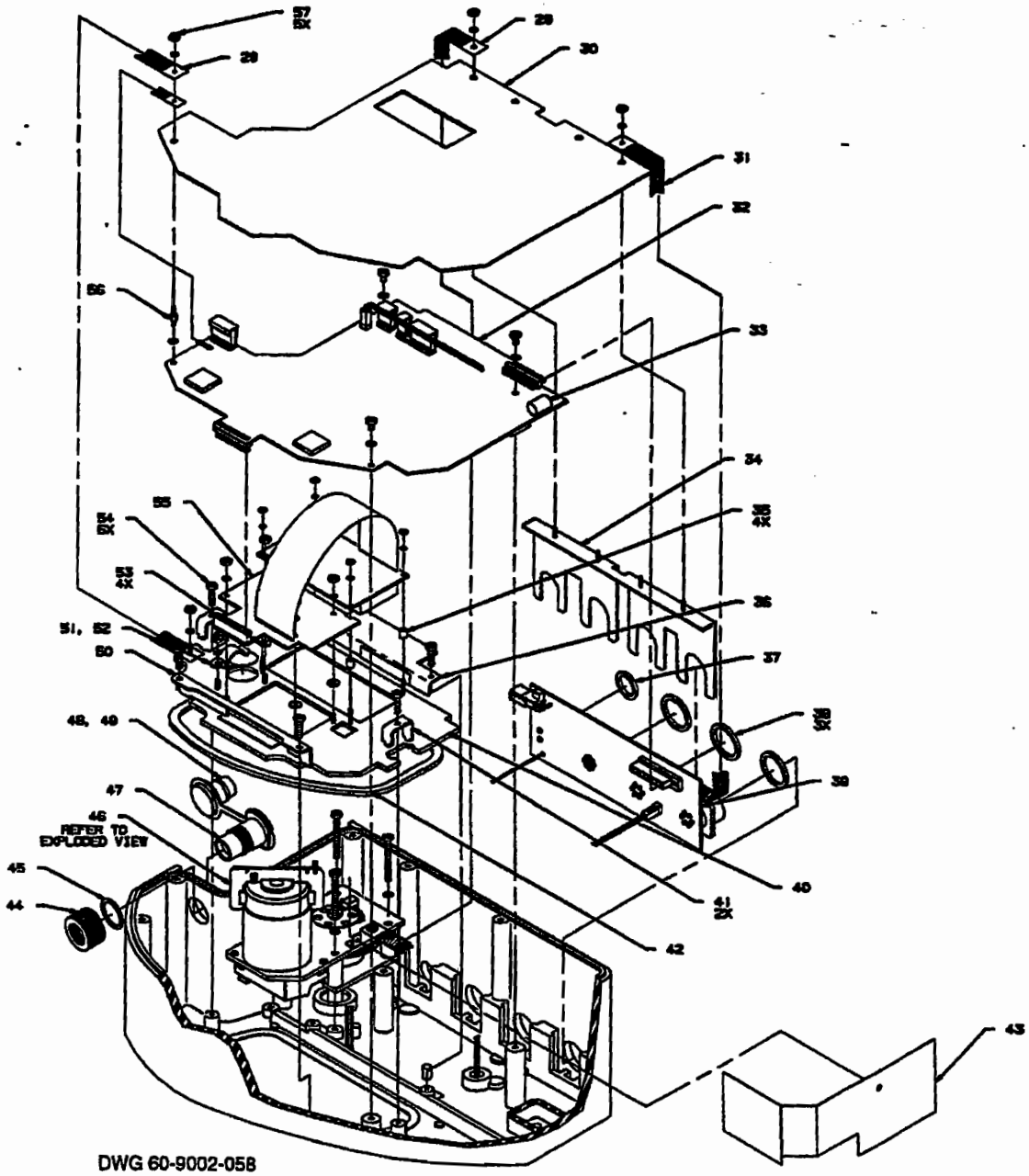

DWG 60-9002-058

ITEM	INVENTORY NO.	DESCRIPTION
29	609003408	STRAP INTCON 4.125
30	609003576	SHLD ESD CONT CE
31	609003407	STRAP INTCON 3.5"
32	609004324	CBA CPU YSI CE
*** 33	340500000	BAT 2/3A LITHIUM
34	609004201	RTNG CLIP ASSY CE
35	609003077	SPCR .188 X 0.25 L
36	609003132	HLDN CONT PNL TOP
37	202400114	O RING .612ID .103
38	202400118	O-RING .862ID .103
39	609004325	CBA CONN YSI CE
40	609004328	CONT PNL ASSY CE
41	609003029	HLDN CONT PNL
42	609003066	GSKT CONT PNL
43	689003554	SHLD MN PCB
44	609003020	NUT CONN
45	202100018	O-RING .739ID .070
46	609004301	PMP GR CS ASSY CE (INCLUDES ITEMS 59 THRU 69)
47	609004206	CONN ASSY 8 PIN CE
48	609003074	STRAP P
49	609003075	P FL MDL CONN
50	609003133	HLDN CONT PNL BOT
51	209902138	CLIP TNSN .375 DIA
52	490001300	HMD INDCTR CARD
53	233040405	WSHR FL .125 NYL
54	231514920	SCR SLFTPG6-19X5/8
55	609004006	DSPL KYPD ASSY
56	609003406	STDF 4-40 X 0.25 L
57	232910100	NUT S 4-40

NOTE: * ITEM IS NOT SHOWN IN ILLUSTRATION

***

Caution: Danger of explosion if lithium battery is incorrectly replaced. Replace with the same type, ensuring correct polarity. Do not dispose of lithium battery in fire.

MODEL 6712
PUMP GEAR CASE
ASSEMBLY

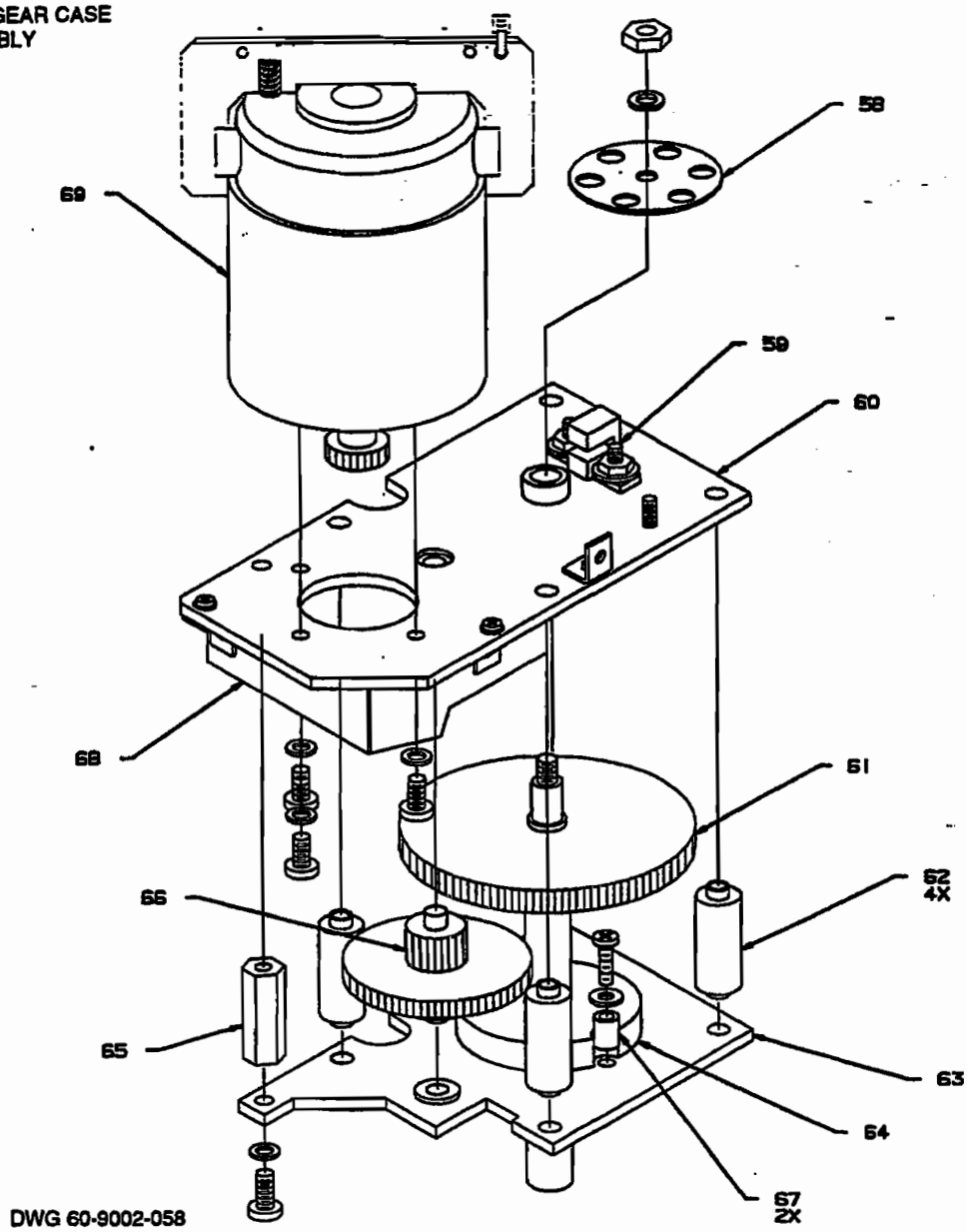

DWG 60-9002-058

ITEM	INVENTORY NO.	DESCRIPTION
58	609003112	DISK OPT
59	609004203	WGR ASSY PMP SNSR
60	609004296	MOT MTG PL ASSY CE
61	609004304	PMP SFT ASSY
62	602703129	STDF DISTR GR CS
63	609004298	MTG PL ASSY PMP
64	609004305	SPCR 1.38 X 0.31 L
65	237263210	STDF 6-32 X 1.00 L
66	609004303	GR ASSY
67	237012000	SPACER, .140 ID X .313 OD X .312 LONG
68	699003555	SHLD DSPL
69	609004046	MOT ASSY

Appendix E Accessories List

Isco, Inc.
P.O. Box 82531
Lincoln, NE 68501
Telephone Within U.S.A.
Toll free: (800) 228-4373
Outside U.S.A:(402) 464-0231
Fax: (402) 465-3022

Order Information

Prices available on request. Additional items appear in *Appendix D, Replacement Parts*. Many other items are available. To order any item, contact your sales representative or the factory. Note that the part name listed on your order acknowledgment and invoice may be different than the item name listed here. When examining these documents, use the part number for reference.

Controller, Center Sections, Top Covers, and Tubs

6712 Sampler Controller 68-6710-074
(Includes 2 Pump Tubes.)

6712 Portable Sampler Instruction Manual 60-9004-334

6712 Portable Sampler Pocket Guide 60-9003-589

Compact Center Section 60-9004-245

Compact Tub 60-3704-129

Mini-Tub (for use with Compact Tub and multiple bottle carrier only) 60-3704-181

Compact Top Cover 60-9004-248

Standard Center Section 60-9004-246

Standard Top Cover 60-9004-247

Standard Tub 60-9004-052

5 Gallon Bottle Base Kit (fits Standard Portable Samplers) 68-6712-078
(Includes Bottle Base, Glass Bottle, Cap, Teflon Cap Liner, Discharge Tube, and Composite Tube Guide.

Compact and Mini Sampler Bottle Kits

24-Bottle Kit (500-milliliter Polyethylene Bottles) 68-6712-022
(Includes Bottle Carrier, Bottles, Retaining Ring and 2 Discharge Tubes.)

12-Bottle Kit (500-milliliter Polyethylene Bottles) 68-6712-023
(Includes Bottle Carrier, Retaining Ring, Bottles, and 2 Discharge Tubes.)

12-Bottle Kit (375-milliliter Glass Bottles) 68-6712-024
(Includes Bottle Carrier, Retaining Ring, Bottles, and 2 Discharge Tubes.)

Compact Sampler Bottle Kits

1-Bottle Kit (9.4-liter Polyethylene) 68-6712-025
(Includes Bottle and 2 Discharge Tubes.)

1-Bottle Kit (9.4-liter Glass Bottle) 68-6712-026
(Includes Bottle and 2 Discharge Tubes.)

Standard Sampler Bottle Kits

24-Bottle Kit (1,000-milliliter Polypropylene Bottles) 68-6712-006
(Includes Retaining Ring, Bottles, and 2 Discharge Tubes.)

24-Bottle Kit (350-milliliter Glass Bottles) 68-6712-007
(Includes Retaining Ring, Bottles, and 2 Discharge Tubes.)

12-Bottle Kit (1,000-milliliter Polypropylene Bottles) 68-6712-008
(Includes Insert, Bottles, Retaining Ring, and 2 Discharge Tubes.)

12-Bottle Kit (950-milliliter Glass Bottles) 68-6712-009
(Includes Insert, Retaining Ring Bottles, and 2 Discharge Tubes.)

8-Bottle Kit (2.0-liter Polyethylene Bottles) 68-6712-010
(Includes Insert, Bottles, Retaining Ring, and 2 Discharge Tubes.)

Bulk Sets of Bottles with Lids (continued)

Set of 500, 500-milliliter Polyethylene Bottles with Unlined Lids	68-6712-030
Set of 12, 375-milliliter Glass Bottles	68-2900-015
Set of 100, 375-milliliter Glass Bottles	68-6712-031
Set of 24, 1,000-milliliter Polypropylene Bottles with Polyethylene Foam Lined Lids	68-2100-007
Set of 100, 1,000-milliliter Polypropylene Bottles with Polyethylene Foam Lined Lids	68-3700-046
Set of 500, 1,000-milliliter Polypropylene Bottles with Polyethylene Foam Lined Lids	68-3700-047
Set of 24, 350-milliliter Glass Bottles with Teflon Lined Lids	68-2100-001
Set of 100, 350-milliliter Glass Bottles with Teflon Lined Lids	68-3700-048
Set of 12, 1,000-milliliter Polypropylene Bottles with Lids	68-3700-035
Set of 100, 1,000-milliliter Polypropylene Bottles with Lids	68-6712-016
Set of 500, 1,000-milliliter Polypropylene Bottles with Lids	68-6712-017
Set of 12, 950-milliliter Bottles	68-3700-023
Set of 100, 950-milliliter Bottles with Teflon Lined Lids	68-6712-018
Set of 8, 2.0-liter Polyethylene Bottles with Unlined Lids	68-2740-026
Set of 100, 2.0-liter Polyethylene Bottles with Unlined Lids	68-3720-028
Set of 8, 1.8-liter Glass Bottles with Teflon Lined Lids	68-2740-027
Set of 100, 1.8-liter Glass Bottles with Teflon Lined Lids	68-3720-030
3.7-liter Glass Bottles with Teflon Lined Lids	68-2910-004
3.7-liter Polyethylene Bottles with Unlined Lids	68-2910-003
Set of 4, 3.7-liter Glass Bottles with Teflon Lined Lids	68-6712-021
Set of 4, 3.7-liter Polyethylene Bottles with Unlined Lids	68-6712-020
9.4-liter (2½-gallon) Glass Bottle with Teflon Lined Lid	68-2700-005
9.4-liter (2½-gallon) Polyethylene Bottle with Lid	299-0013-04
18.9-liter (5-gallon) Glass Bottle with Cap and Teflon Liner (for the 5 Gallon Bottle Base)	68-6712-079

General Accessories: Compact and Standard Samplers

Composite Tube Guide (Recommended for all 1-Bottle Kits)	60-9004-051
Distributor Arm	60-9004-050
Equipment Suspension Platform (For Suspending Samplers In Manhole or Other Locations)	60-3004-151
Locking Assy, compact samplers (includes locking cables and padlock)	68-6712-111
Locking Assy, standard samplers (includes locking cables and padlock)	68-6712-134
Suspension Harness for Compact and Standard Samplers	60-1394-014
1000-milliliter Plastic Graduated Cylinder	299-0020-00

Pump Tubes, Suction Line, Strainers

Pump Tube (Qty 5)	68-6712-062
Pump Tube (Qty 10)	68-6712-044
Pump Tube (Qty 25)	68-6712-045
Weighted Polypropylene Strainer with 10 foot Suction Line	60-3704-071
Weighted Polypropylene Strainer with 25 foot Suction Line	60-3704-072
Teflon Suction Line (10 foot length)	60-1683-146
Teflon Suction Line (25 foot length)	60-2703-114
Bulk Vinyl Suction Line (100 foot length)	68-1680-058
Bulk Vinyl Suction Line (500 foot length)	68-1680-059
⅜-inch Vinyl Suction Line Accessory Kit (includes tube coupling, clamp, and instructions)	68-3700-007
CPVC Strainer	60-3704-066
Polypropylene Weighted Strainer	60-1394-071
Stainless Steel Low Flow Strainer	60-2903-079
Stainless Steel Strainer	60-1684-110

SDI-12 Data Acquisition Connect Cables

Note: Y-connect cables can be combined with other Y-connect cables or SDI-12 adapter cables if multiple SDI-12 devices are to be connected.

Rain Gauge Y-Connect Cable 60-9004-294
(This cable allows connection of 2 of the following: rain gauge, SDI-12 adapter cable, SDI-12 Y-connect cable, I/O adapter, temperature sensor.)

YSI SDI-12 Adapter Cable 60-9004-337

YSI SDI-12 Y-Connect Cable 60-9004-338
(This cable allows connection of a YSI SDI-12 sonde and an Isco 674 Rain Gauge.)

Hydrolab Quanta SDI-12 Adapter Cable 60-9004-339

Hydrolab Quanta SDI-12 Y-Connect Cable 60-9004-340
(This cable allows connection of a Hydrolab Quanta SDI-12 sonde and an Isco 674 Rain Gauge.)

SDI-12 Adapter Cable (6 foot length, no connector) 60-9004-341
(This is for use with a customer supplied connector to an SDI-12 device.)

SDI-12 Y-Connect Cable (6 foot length, no connector) 60-9004-342
(This is for use with a customer supplied connector to an SDI-12 device and an Isco 674 Rain Gauge.)

DECLARATION OF CONFORMITY

ISM1-A

Application of Council Directive:	89/336/EEC – The EMC Directive 73/23/EEC – The Low Voltage Directive
Manufacturer's Name:	Isco, Inc.
Manufacturer's Address:	4700 Superior, Lincoln, Nebraska 68504 USA Mailing Address: P.O. Box 82531, Lincoln, NE 68501
Equipment Type/Environment:	Laboratory Equipment for Light Industrial/Commercial Environments
Trade Name/Model No:	6712 Sampler
Year of Issue:	2001
Standards to which Conformity is Declared:	EN 61326-1998 EMC Requirements for Electrical Equipment for Measurement, Control, and Laboratory Use EN 61010-1 Safety Requirements for Electrical Equipment for Measurement, Control, and Laboratory Use

Standard	Description	Severity Applied	Performance Criteria
EN61000-4-2	Electrostatic Discharge	Level 2 - 4kV contact discharge Level 3 - 8kV air discharge	B B
EN61000-4-3	Radiated RF Immunity	80 MHz to 1000MHz 80% AM at 1kHz Level 1 – 10V/m	A
EN61000-4-4	Electrical Fast Transient	Level 2 - 2kV on ac lines	B
EN61000-4-5	Surge on AC Lines	2kV common mode, 1kV differential mode	B
EN61000-4-6	Conducted RF on AC lines	150 kHz to 80 MHz, 3V rms, 80% modulated	B
EN61000-4-11	Voltage Dips/Short Interruptions	0.5 cycle, each polarity/100%	B
CISPR11/ EN 55011	RF Emissions	Group 1, Class A Industrial, Scientific, and Medical Equipment	
EN61000-3-2, 3-3	Harmonic, Flicker		

We, the undersigned, hereby declare that the design of the equipment specified above conforms to the above Directive(s) and Standards as of March 6, 2001.

Bill Foster
USA Representative

Isco

Bill Foster
Director of Engineering
Isco, Inc.
4700 Superior Street
Lincoln, Nebraska 68504

Phone: (402) 464-0231
Fax: (402) 464-4543

Michael Teutscher
European Authorized Representative

Isco
STIP

Contact: Dr. Dirk Köppenkastrop
Geschäftsführer Managing Director
STIP ISCO GmbH

Siemensstraße 2
64823 Groß-Umstadt

Telefon: 06078 7 86-82
Telefax: 06078 7 86-88

60-9002-068
Rev.

INSTRUCTION MANUAL

ISCO MODEL 674 RAIN GAUGE

PART # 60-3283-011

COPYRIGHT 1992
BY
Isco, Inc.
531 Westgate Boulevard
Lincoln, Nebraska, U.S.A. 68528
PHONE: (800) 228-4373
FAX: (402) 474-6685

Outside the U.S.A.,
call (402) 474-2233
ISSUED: September 1, 1992
Rev. D: 11-10-96

FOREWORD

This instruction manual is designed to help you gain a thorough understanding of the operation of the equipment. Isco recommends that you read this manual completely before placing the equipment in service.

Although Isco designs reliability into all equipment, there is always the possibility of a malfunction occurring. You can use this manual to help in diagnosing and repairing the malfunction, if possible.

If the malfunction persists, call or write the Isco Customer Service Department for assistance. (Address: Isco Inc., Environmental Division, 531 Westgate Boulevard, Lincoln, NE 68528-1586; Phone: [800] 228-4373 or [402] 474-2233 Fax: [402] 474-6685.) Simple difficulties can often be diagnosed over the phone. If it is necessary to return the equipment to the factory for service, please follow the shipping instructions provided by the Customer Service Department, including the use of the **Return Authorization Number specified. Be sure to include a note describing the malfunction.** This will aid in the prompt repair and return of the equipment.

Isco welcomes suggestions that would improve the information presented in this manual or enhance the operation of the equipment itself.

Figure 1. Isco Model 674 Rain Gauge (shown with cover removed)

Vegetation grows over dramatically over time. Any construction nearby taking place after the installation may also make a site undesirable by altering the wind currents and rainfall patterns around the gauge. Under no circumstances should any nearby object be allowed to grow above or hang directly over the gauge. The rain gauge is solidly built to withstand years of outside use; however, vandals could ruin it. Always try to install the rain gauge where it will be protected from vandalism. Avoid installation in low places where runoff from heavy storms could flood the gauge or wash it away. The rain gauge would not be hurt by submersion, but it would be unable to measure. Do not drop the rain gauge or expose it to shock; that could damage the jeweled bearings.

Installation - Installation of the rain gauge is simple. Just follow the procedure listed below. Steps 7 and 8 are optional depending on the requirements of your particular installation.

1. Unpack the rain gauge from the shipping box. Save the box and packing to return the rain gauge to Isco if that becomes necessary. Remove the insert that holds the tipping bucket. Remove the outer tube (white cover with funnel) from the rain gauge by unsnapping the two latches on the side.

2. Locate the bottom (mounting) plate of the rain gauge. This is golden-colored metal. Mount this plate securely to a stable horizontal surface that is relatively level. Isco suggests using corrosion-resistant hardware for mounting. The mounting holes will accommodate hardware as large as ¼ inch in diameter.

3. This is very important: Level the rain gauge by adjusting the three thumbscrews on the base until the bubble in the bubble level is exactly centered.

4. Carefully remove the rubber band used to secure the tipping bucket assembly. Do not apply pressure to the bucket or the pivot arm. Do not attempt any adjustments.

5. Reinstall the protective outer tube on the rain gauge.

6. Route the cable from the rain gauge to the flow meter. Coil any extra wire by the flow meter.

7. If necessary, you can increase the distance between the flow meter and the rain gauge to 1,000 feet (maximum) by splicing a two-wire # 18 AWG cable (user- supplied) between the Isco-provided cable and the rain gauge.

8. Disconnect the Isco cable from the terminal block inside the rain gauge and splice the user-supplied cable to that end of the Isco cable. If the wiring and the splice will be exposed to the weather, use wire appropriate for outdoor use and insulate the splice properly. A weatherproof box may be necessary. Do *not* cut the M/S connector from the Isco cable unless you are connecting the rain gauge to equipment that does not have a compatible connector. You will not be able to reconnect it easily.

Maintenance - The Isco Rain Gauge is built of quality materials to withstand years of exposure to the elements. Normally, no maintenance is required. Once a year (or more often if conditions warrant) you may want to remove the cover and check the gauge to see that it has not been affected by the buildup of dust, debris, or insect infestation. The rain gauge is factory-calibrated and needs no further adjustment. If your installation is temporary and you intend to move the rain gauge from site to site, use care in transporting the unit. Again, you could damage the jewelled pivots for the tipping bucket if you expose the rain gauge to a severe shock, such as by dropping it. If you move the rain gauge frequently, always secure the tipping bucket with a rubber band and use the original packing box to protect the unit during transport. Repack the rain gauge as it was originally shipped to you if you need to return it to Isco.

Figure 2. Replacement Parts List Illustration

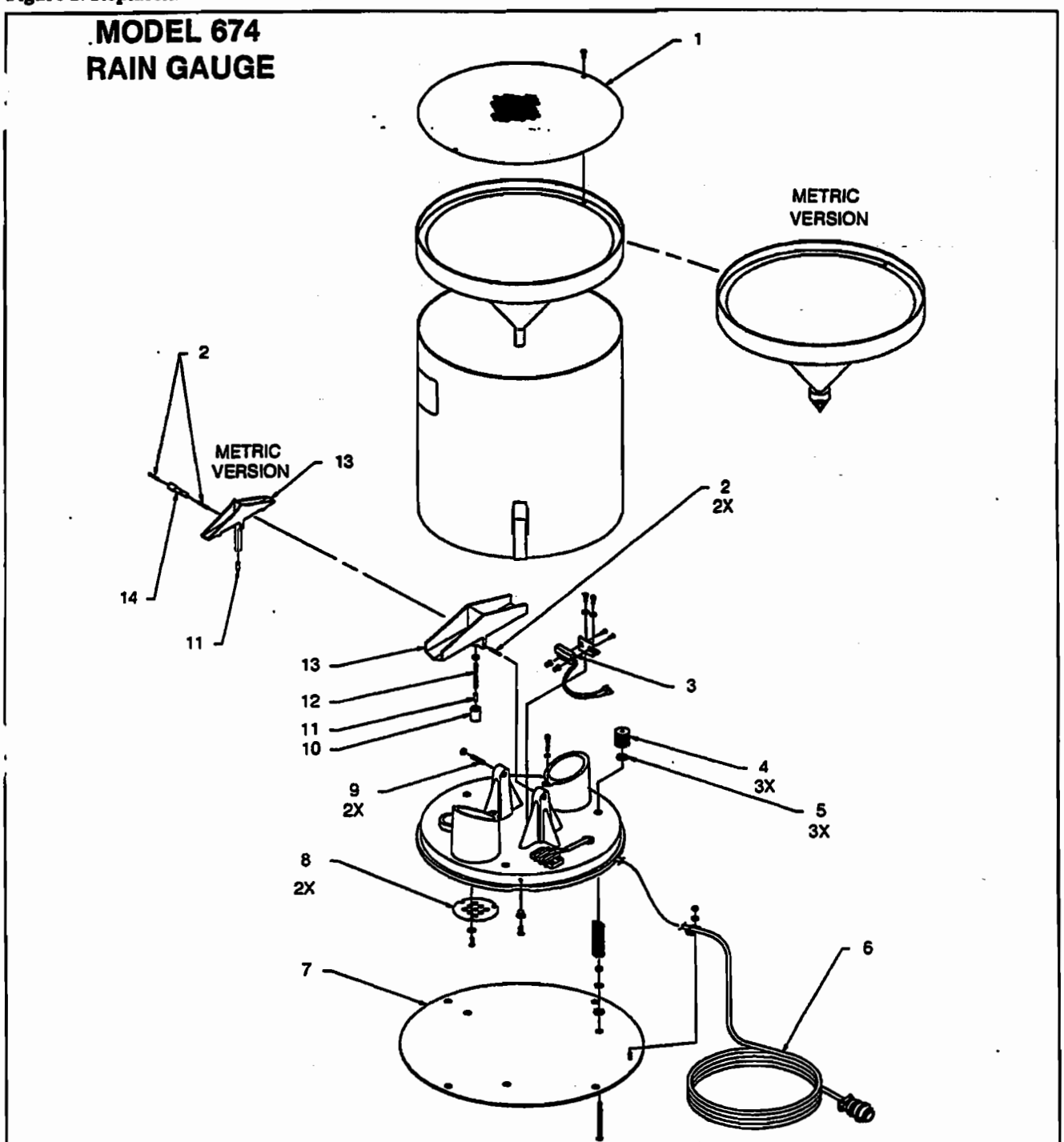

ITEM	INVENTORY NO.	DESCRIPTION
1	603283023	INLET SCREEN MESH
2	603283009	JEWEL BRG PVT SST
3	410991001	SENSOR MAG PRXTY.175/.800 SPST
4	603283004	LEVEL ADJUSTING KNOB
5	233042800	NYLON WASHER .253 x .506 x .01
6	603004149	CBL ASSY RAIN GAUGE 50'
7	603284003	MOUNTING PLATE ASSY
8	603283006	DRAIN SCREEN
9	201900000	SPRING LOADED VEE JEWEL BEARING
10	603283012	MAGNET MOUNT
11	209020400	MAGNET .12 DIA x 3/8 LONG
12	603283016	MOUNTING ROD
13	603284004	TIPPING BUCKET ASSY
	603283029	TIPPING BUCKET METRIC
14	603283030	PIVOT SHAFT

One Year Limited Warranty *

Factory Service

Isco instruments covered by this warranty have a one-year limited warranty covering parts and labor.

Any instrument that fails during the warranty period, due to faulty parts or workmanship, will be repaired at the factory at no charge to the customer. Isco's exclusive liability is limited to repair or replacement of defective instruments. Isco is not liable for consequential damages.

Isco will pay surface transportation charges both ways within the 48 contiguous United States if the instrument proves to be defective within 30 days of shipment. Throughout the remainder of the warranty period, the customer will pay to return the instrument to Isco, and Isco will pay surface transportation to return the repaired instrument to the customer. Isco will not pay air freight or customer's packing and crating charges.

The warranty for any instrument is the one in effect on date of shipment. Warranty period begins on the shipping date, unless Isco agrees in writing to a different date.

Excluded from this warranty are normal wear; expendable items such as charts, ribbon, tubing, and glassware; and damage due to corrosion, misuse, accident, or lack of proper maintenance. This warranty does not cover Isco on-line Process Analyzers and certain Isco SFE instruments, which are covered under different warranty terms, nor does it cover products not sold under the Isco trademark or for which any other warranty is specifically stated in sales literature.

This warranty is expressly in lieu of all other warranties and obligations and Isco specifically disclaims any warranty of merchantability or fitness for a particular purpose. Any changes in this warranty must be in writing and signed by a corporate officer.

The warrantor is Isco, Inc. 4700 Superior, Lincoln. NE 68504. U.S.A.

* This warranty applies to USA customers. Customers in other countries should contact their Isco dealer for warranty service.

Before returning any instrument for repair, please call, fax, or e-mail the Isco service department for instructions. Many problems can often be diagnosed and corrected over the phone, or by e-mail, without returning the instrument to the factory.

Instruments needing factory repair should be packed carefully, preferably in the original carton, and shipped to the attention of the service department. Small, non-fragile items can be sent by insured parcel post. **PLEASE BE SURE TO ENCLOSE A NOTE EXPLAINING THE DEFECT.**

Return instruments to: Isco, Inc. - Attention Repair Service
4700 Superior Street
Lincoln NE 68504 USA

Mailing address: Isco, Inc.
PO Box 82531
Lincoln NE 68501 USA

Phone: Repair service: (800)775-2965 (lab instruments)
(800)228-4373 (samplers & flow meters)
Sales & General Information (800)228-4373 (USA & Canada)

Fax: (402) 465-3001

Email: service@isco.com

November 2000 • #2217

Isco, Inc.
www.isco.com

Appendix F – Specifications

The Specifications in Appendix F are the Remedial Action construction specifications, modified to incorporate the Technical Changes, that could be applicable to the activities outlined in the O&M Requirements Summary. These Specifications are provided to be used for material and execution of performance requirements as a guideline for the Commonwealth to aid in maintaining the design parameters and performance requirements pursuant to the SOW. The Commonwealth may need to modify references for submittals and approvals or other references to the Contractor as applicable to better serve their requirements.

TABLE OF CONTENTS

DIVISION 2 - SITE WORK

02050	Demolition and Disposal
02091	Well Abandonment
02094	Sump Extensions
02095	Sump Abandonment
02208	Site Roadways
02230	HDPE Piping
02231	Clearing and Grubbing
02270	Geomembrane
02271	Riprap
02275	Geotextile and Composite Drainage Net
02300	Earthwork
02420	Storm Water, Erosion, and Sediment Controls
02671	Well Installation
02725	Principal Spillway Flow Measurement (East Detention Basin)
02831	Chain Link Fence
02935	Turf

DIVISION 3 - CONCRETE

03100	Structural Concrete Formwork
03200	Concrete Reinforcement
03300	Concrete

DIVISION 16 - ELECTRICAL

16370	Electrical Distribution System, Areal
16375	Electrical Distribution System (Low Voltage)

SECTION 02050

DEMOLITION AND DISPOSAL

PART 1 - GENERAL

1.1 WORK INCLUDED

This section includes the requirements for the abandonment of utilities, demolition of buildings within the Restricted Area, demolition of Phase IIA bunkers, and the disposal of the debris. The following buildings and structures shall be demolished:

Building 2 - Radiation Control
Building 3 - EPA Tank Farm
Building 4 - Laboratory Storage
Building 5 - Warehouse/Storage
Building 6 - Evaporator
Building 7 - Garage
Building 8 - Large Tank Farm
Building 9 - Small Tank Farm
Phase IIA – EMC Bunkers

1.2 DEFINITIONS

1.2.1 Building Contents

Building contents are any materials, tanks, or equipment stored in or around a building.

1.2.2 Building Debris

Building debris refers to any waste material produced during the demolition of the building structures (walls, roofs, and foundations).

1.3 BUILDING AND STRUCTURE DESCRIPTIONS

1.3.1 Building 2 - Radiation Control

The Radiation Control Building is an approximately 1,500 square foot building used by the Commonwealth for egress control form the Restricted Area. The building contains offices, a meeting room, restrooms, a change room, showers, a laundry room, and a laboratory. The building has a concrete slab floor, wood siding, and an asphalt shingle roof.

Utilities tied into the building include water, electricity, and telephone. Sanitary sewer lines take waste from the building to a treatment facility located near the Environmental Protection Agency (EPA) Tank Farm Building. The Radiation Control Building contains decontamination showers,

and the water from the showers is directed to a 1,000-gallon underground storage tank (UST) located near the northeast corner of the building. Propane tanks located at the northeast corner of the building supply the propane for the laboratory dryer. The building is cooled by two electric air conditioning units located adjacent to the building.

Other appurtenant structures within close proximity to the Radiation Control Building include a weather station, an aboveground storage tank (AST) containing diesel fuel, and a fuel tank. A windsock and power poles are located west of the building.

1.3.2 Building 3 - EPA Tank Farm

The EPA Tank Farm Building is an approximately 1,500 square foot prefabricated metal building that contains two 20,000-gallon tanks. The building is constructed with an 8-inch thick concrete slab on top of a concrete foundation. A 4-foot high concrete wall was placed on top of the concrete slab to serve as containment diking for the tanks. The prefabricated metal building ties into the 4-foot concrete wall along the east, west, and south sides. A 10-foot x 10-foot roll-up door and a 3-foot man door are located at the north end of the building.

The 20,000-gallon tanks sit on concrete pedestals and are attached to the floor with cable ties. No utilities are currently connected to the building. The building was constructed with electrical service, including lights and outlets. A portable polyethylene tank is located to the north side of the building. This tank serves as a temporary holding tank for transferring liquid wastes to the EPA tanks.

1.3.3 Building 4 - Laboratory Storage

The Laboratory Storage Building is an approximately 1,900 square foot concrete block building used for material storage at the Maxey Flats Disposal Site (MFDS) site. The building is considered to have a high side which may be contaminated and a low-side which is uncontaminated. The building has a concrete floor slab, 8-inch concrete block walls, and a galvanized metal roof supported by wood trusses.

Electrical lines are the only utility connected to the building. No tanks, piping systems, or heating and ventilation systems are located in the building. Radioactive and hazardous waste drums are stored in a contaminated area.

1.3.4 Building 5 - Warehouse/Storage

The Warehouse is an approximately 3,100 square foot building used for storing materials at the site. The building is constructed in a pole-barn fashion. The southern part of the building has a concrete floor, and the northern part has a dirt floor. The building has galvanized metal walls and roof. The roof slopes from a height 17 feet, 9 inches on one side of the building to14 feet, 2 inches on the other site. The supports and rafters are wood. Four 12-foot-high sliding doors are located on the east side of the building. One door has fallen off the track and is lying on the concrete ramp to the building.

Electrical lines are the only utility connected to the building. No tanks, piping systems, or heating and ventilation systems are located in the building.

Old poly (vinyl chloride) (PVC) previously used to cover the site is stored on the dirt floor. An old truck trailer without wheels is located on the west side of the building. Other trash and debris (old pallets, etc.) are located outside the west side of the building.

1.3.5 Building 6 - Evaporator

The evaporator building is approximately a 2,000 square foot building previously used for housing an evaporation system. The building has a concrete floor that is bermed 6 inches and covered with a rubber walk pad and Visqueen. The building walls and roof are corrugated metal. The trusses and framing are wood. An 8-foot high concrete block-shielding wall exists around toe of the tanks and was used during operation of the system.

An active overhead electrical line is connected to the building. Underground piping from the tank farm buildings and a propane line enter the building from the west side. The building has numerous pipes running throughout the building.

After the evaporation process stopped, birds occupied the building. Therefore, the building contents are considered to be a potential source for histoplasmosis. Level C personal protective equipment (PPE) is currently required to enter the building.

1.3.6 Building 7 - Garage

The Garage is an approximately 4,800 square foot structure. The building has a concrete slab floor, and metal siding and roof. The structure is supported by a pre-engineered steel frame. The walls are insulated. The roof height is 15 feet, 9 inches at the eave around the building perimeter and 18 feet at the centerline. Two existing roll-up doors exist on each end of the building. Prior to modification of the garage to serve as the leachate storage facility for remedial action, it housed a garage area, a wood frame document storage area, a tool room, and an old hot lab.

As the leachate storage facility, the building houses four 20,000-gallon tanks and appurtenant controls during the Leachate Removal and Disposal (LR/D) phase of the Remedial Action.

Utilities connected to the building include propane gas, electricity, and water. The building also has floor sumps in the northeast and southeast corners.

1.3.7 Building 8 - Large Tank Farm

The Large Tank Farm building is an approximately 8,100 square foot structure that contains 10 tanks of varying sizes (20,000 gallons, maximum). The building has a dirt and gravel floor and metal walls and roof. The building roof is supported by wooden trusses. From ground level the floor drops approximately 4 feet in the middle of the building, and the walls rise approximately 10 feet. Each end of the building contains double sliding doors for access into the building. Man

doors are located on each side of the building. Tanks are supported by concrete pads but are not strapped to the pads.

Utilities currently tied into the building include overhead electric, heaters, sumps, miscellaneous piping, and a pipeline connected to the Evaporator Building. The southern end of the building is constructed over one of the waste disposal trenches.

This building may contain bird droppings. Therefore, the building contents may be a possible source for histoplasmosis.

1.3.8 Building 9 - Small Tank Farm

The Small Tank Farm Building is an approximately 1,700 square foot building located west of the Large Tank Farm Building. The building has a dirt and gravel floor and metal sheet walls and roof. Trusses and wall joists are wood. At the time of inspection, the slab contained approximately 1-foot depth of water. The building eave height is 11 feet at the edge of the building and 15 feet at the center of the building. Two man doors provide access into each end of the building. The building contains one 20,000-gallon tank that sits on a concrete pad within a sump in the middle of the building.

Utilities include underground electrical lines, overhead lighting, and a 10-inch underground PVC pipe.

This building may contain bird droppings. Therefore, the building contents may be a possible source for histoplasmosis.

1.3.9 Phase IIA Bunkers

The Phase IIA bunkers were constructed for the disposal of solidified liquids derived from leachate removal and disposal operations. Phase IIA consists of 55 bunkers or cells. The inside dimensions for a single unit are approximately 10 feet wide by 50 feet long by 8 feet high. The walls, foundation slab, and roof slab are constructed of reinforced concrete. The exterior walls are 12 inches thick; the interior walls are 8 inches thick, except for one central north-south wall, which is 12 inches thick. The roof slab is 11.5 inches thick and is underlain by metal roof decking. Each bunker typically has one 24-inch diameter opening consisting of a cast iron frame and lid; however, Cells 163 through 167 each has two 24-inch diameter openings. Cells 126 and 132 each have four 24-inch diameter openings and two 36-inch diameter openings, and each house four transit mix truck washout tanks.

PART 2 - PRODUCTS

2.1 DRUMS OR CONTAINERS

Any drums or containers which are used shall be leak-proof and have the required integrity for transportation and storage of materials.

2.2 FLOWABLE FILL

The flowable fill shall be a wet, flowable slurry that contains a mixture of cement, fly ash, sand, and water. The mix shall have a slump greater than 8 inches. Slump shall be tested as follows, one slump test per day by supplier and on-site visual flow characterization for each load delivered. The strength shall be verified by a concrete penetrometer (soil test model CT-421A, range 60 to 700 psi) and at least one set of three cylinders for unconfined compressive strength testing (one time test).

PART 3 - EXECUTION

The order of demolition shall be disconnecting and abandoning utilities, disposing of building contents, and demolition of the building structures. Utilities are discussed in Section 3.1 and apply to all utilities within the Restricted Area. Section 3.2 contains a discussion of the method of disposal for the building contents. Individual building structures and requirements for each building are given in Section 3.3. Section 3.3 also includes the requirement for demolition of Phase IIA bunkers.

Temporary storm water controls described in Section 02420 shall be used to prevent run-on from entering the building debris area. Precipitation that falls directly into the building debris areas shall be collected and sampled prior to discharge.

Temporary storm water controls shall be used as applicable to minimize precipitation entering Phase IIA. Demolition and backfill work shall be sequenced to minimize infiltration and to promote direct run-off. Collection and sampling of precipitation that falls within the demolition debris is not anticipated. Where a temporary membrane liner is used to cover debris during the demolition activities, the previously established practice for sampling and analysis shall be used when water collects on the temporary cover.

3.1 UTILITIES

Prior to demolition of each building, all utilities shall be abandoned as required. All utilities within the Restricted Area shall be deactivated and abandoned. Utilities shall be abandoned in place unless encountered during required excavations. Utility locations are shown on the drawings.

3.1.1 Electrical

All electrical lines within the Restricted Area shall be deactivated. Overhead electrical lines shall be removed and the lines, wooden poles and other debris shall be disposed by burial outside the EMC Bunker, or placed in the EMC Bunker, as appropriate. Underground electrical lines shall be deactivated and abandoned in place.

3.1.2 Telephone

All telephone lines shall be deactivated. Overhead telephone lines shall be removed and the lines, wooden poles and other debris shall be disposed by burial outside the EMC Bunkers, or placed in the EMC Bunker, as appropriate. Underground telephone lines shall be deactivated and abandoned in place.

3.1.3 Water

All water lines shall be drained, capped, and abandoned in place. The existing fire hydrant which is located within the north boundary of the Restricted Area shall be relocated so that it can service Building 1 and the new garage building. The existing water line that services Building 1 shall be put out-of-service and a new line run for water service to Building 1.

3.1.4 Sanitary Sewer

All sanitary sewer lines shall be drained, capped, and abandoned in place. The sewage treatment plant that services the Radiation Control Building (Building 2) shall be demolished and buried on-site with the other building debris.

3.1.5 Weather Station

The existing weather station which is located to the southeast of Building 1 shall be relocated so as to not interfere with the proposed Remaining Work (RW) site development. Relocation shall be coordinated with the Commonwealth of Kentucky (Commonwealth).

3.1.6 Aboveground Storage Tank

The aboveground fuel storage tank which is located to the north of Building 2 shall be removed and properly disposed by the Commonwealth of Kentucky.

3.1.7 General Site Storm Water Appurtenances

Miscellaneous site storm water appurtenances within the Restricted Area shall be volume reduced and buried with the building debris. Appurtenant items include, but are not limited to, metal culverts, concrete headwalls, west basin outflow devices, south weir structure, leachate system cement silo foundation, etc.

3.2 BUILDING CONTENTS

In general the building contents can be divided into 7 waste groups: water, scintillation vials, containerized chemicals, large items with little or no radioactivity, dry active waste (DAW), pipes, tanks, and sumps; and wastes not included in the Limited Initial Data Acquisition (LIDA) inventory. Disposal techniques for each waste group are discussed in the following subsections. Prior to disposing of contents form the Evaporator, Large Tank Farm, and Small Tank Farm

Buildings, the potential exposure to histoplasmosis shall be addressed as specified in the Subsection 3.3.1.2, Bird Droppings.

The decision tree in Attachment A indicates the process for determining the on-site disposal method for the building contents. Materials identified during the LIDA inventory that are not compatible with the solidification process or are not suitable for disposal in the EMC Bunker and that were not generated as a result of IRP RA activities are to be disposed off site by the Commonwealth. If similar type wastes are identified during detailed investigation, the Commonwealth will be contacted and disposal options reviewed.

3.2.1 Inventoried Building Contents

The items included in the building inventories and the proposed disposal location for each item will be established based on a detailed inventory and characterization. The inventory will include inspection of contents and segregation.

3.2.1.1 Water

Water found in containers within the buildings shall be tested to determine whether the water meets the quality requirements to be processed by the Solidification Facility. Water meeting the Solidification Facility standards shall be processed directly in the Solidification Facility. Water not meeting these requirements shall be converted to grout using a drum mixer. The water in the drum shall be allowed to solidify, and the drum shall be placed in the EMC Bunkers. The grout mixture will be determined based on the content of the water. Water, which cannot be readily pumped from Tank B, Building 8, and/or other tanks and containers, shall be solidified in place.

Following decommissioning of the EMC Bunkers and demolition of the Garage (Building 7), the residual sludge in the 20,000-gallon tanks will be stabilized and the contingency water that requires disposal by solidification shall be mixed with cement to form a water/cement grout. The grout shall be placed in the 20,000-gallon tanks that are located in the Garage building for disposal.

3.2.1.2 Liquid Scintillation Vials and Other Containers of Scintillation Fluids Generated Onsite

Scintillation fluids shall be assessed to determine if the waste meets acceptable criteria under RCRA Subtitle C for disposal as hazardous waste in an offsite disposal facility, or if the waste may be disposed of onsite in the EMC Bunker. Scintillation fluids that are classified as hazardous waste under RCRA Subtitle C are most appropriately handled through offsite disposal by the generating party.

Scintillation fluids that are found to be acceptable for onsite disposal shall be disposed of in the EMC Bunker if the following conditions are met:

- The vials are crushed and the scintillation liquid and glass are separated. Disposal may be accomplished by one of the following methods.

- The liquid and glass shall be stabilized in suitable containers with a sufficient quantity of absorbent to soak up all the liquid. The container shall be placed in the EMC Bunker.

- Scintillation fluids and containers may be added to the truck grout mix. The mix must be an approved formulation for disposal in the EMC Bunker.

- Non-leachate waste shall be accounted for in the Bunker Waste Inventory.

3.2.1.3 Containerized Chemicals and other Non-Routine Wastes Generated Onsite

Containerized chemicals and other non-routine wastes generated onsite such as ethylene glycol, waste oil and hydraulic fluid are most appropriately handled through offsite disposal by the generating party.

3.2.1.4 Large Items

Large items including wood, fencing, dirt, piping, pumps, and other equipment with little or no radioactivity shall be disposed with the building debris. Disposal of the building debris is covered in Subsection 3.3, Structures. This material shall be placed flat and placed in a manner to reduce void spaces.

3.2.1.5 DAW

DAW including PPE and trash is contained in 55-gallon drums, low specific activity (LSA) boxes, and plastic bags. The containerized waste shall be opened with appropriate health and safety precautions. The DAW shall be placed in the EMC Bunkers.

3.2.1.6 Pipes, Tanks, and Sumps

Pipes shall be removed form the tanks, equipment and hangers. They shall be laid flat and buried with the building debris. A layer of flowable fill may be poured around the pipes and small items to hold them in place.

Waste from the Radiation Control Building UST shall be sampled, dewatered and solidified as specified in Paragraph 3.2.1.1, Water. The dewatered UST will be filled with flowable fill and covered.

The two 20,000 gallon tanks from the EPA Tank Farm Building shall be drained and moved. The water shall be converted to grout as specified in Paragraph 3.2.1.1, Water. The tanks shall be moved adjacent to the EMC Bunker and disposed in the method presented below for the other tanks.

The manways on the tanks within the Large Tank Farm and Small Tank Farm Buildings shall be opened, the contents inspected, and the atmosphere tested. If required, the tank atmosphere shall be vented through a High Efficiency Particulate Air (HEPA) filter. Following the purging of air

from the tank, the tanks interior space shall be filled with flowable fill. The tanks shall be filled and cured in lifts as required to prevent tank rupture.

The evaporator that is located within the Evaporator building shall be disposed by filling tanks and evaporator with flowable fill and burying with the building debris. Pipes and appurtenances shall be disassembled, laid flat, and buried with building debris.

Building sumps shall be checked for water. If water is present, the water shall be treated as specified in 3.2.1.1, Water. Sumps shall be filled with flowable fill and abandoned in place. Sumps shall be abandoned just before the building is demolished.

3.2.1.7 Building Contents not in the Inventory

During the examination of closed containers, waste material may be found that does not fit any of the above-mentioned waste types. If such wastes are encountered and were not included in the LIDA inventory, the wastes shall not be disposed until an agreement is reached by EPA, Commonwealth, and representatives of the Committee as to the disposition of such waste.

3.3 STRUCTURES

3.3.1 General

3.3.1.1 Building Debris

Building debris shall be placed in the area of the Large Tank Farm and surrounding buildings adjacent to the EMC Bunker for burial unless otherwise specified. All building debris and building contents specified for disposal with building debris shall be placed in orderly, horizontal layers. This debris shall be placed to a height of 4 feet, compacted, and covered with a 2-foot thick layer of general fill material. A second layer of debris may be placed over a 4-foot layer, but the maximum height of the building debris shall not exceed 12 feet including the 2- foot general fill layer. After reaching the maximum height placement shall proceed toward the EMC Bunkers.

Building demolition and dust minimization methodologies presented in the Remedial Action (RA) Work Plan shall be followed during demolition of the building structures.

3.3.1.2 Bird Droppings

The berms and floors of the Evaporation Building, Small Tank Farm Building and Large Tank Farm Building shall be sprayed with a Clorox® Solution and covered with the building. Only enough moisture shall be applied to the droppings to prevent the generation of dust; wetting is not intended to make a slurry. The bird droppings shall be moved carefully making sure no dust, which may act as a vehicle for the spread of the H. capsulatum spores, is generated.

3.3.1.3 Phase IIA Debris

Debris from the Phase IIA demolition activities shall be disposed in place, except that the transit mix truck and washout tanks shall be removed and salvaged during demolition. Debris shall be spread and tamped into a uniform layer to an approximate height of 3 feet and covered with a 2-foot layer of general fill. Prior to placing the general fill, one 6- to 8-inch lift of soil material shall be backfilled and tamped above the layer of debris. Geotextile shall be installed between this lift and the general fill. The geotextile is specified in the demolition work plan.

3.3.2 Building 2 - Radiation Control

The Radiation Control Building shall be demolished and disposed burial outside the EMC Bunker. Following removal of the building debris, the subgrade shall be leveled and compacted with general fill to match the topography of the surrounding area.

3.3.3 Building 3 - EPA Tank Farm

Prior to collapse of the structure, the tanks shall be moved and filled with flowable fill as specified in Paragraph 3.2.1.6, Pipes, Tanks, and Sumps. The building floor shall be removed. The debris shall be disposed by burial outside the EMC Bunker.

3.3.4 Building 4 - Laboratory Storage

The debris shall be placed in horizontal layers at the existing building location.

3.3.5 Building 5 - Warehouse/Storage

The Warehouse/Storage Building shall be demolished, and the debris shall be placed at the existing building location. Debris around the building shall be disposed with the building debris.

3.3.6 Building 6 - Evaporator

Prior to removing the building contents or demolishing the building, the bird droppings shall be treated with a Clorox solution and covered with the building. The tanks and associated piping and equipment shall be disposed as described in Subsection 3.2, Building Contents. The building debris shall be placed at the existing building location.

3.3.7 Building 7 - Garage

The Garage shall be demolished and the debris shall be placed at the existing building location. The four 20,000-gallon stainless steel tanks in the Garage building shall be modified for the disposal of contingency water by solidification and for the disposal of DAW upon stabilization of residual sludge. The residual sludge in the base of each LSF tank will be solidified in-place with grout (1,080 gallons of liquid) to meet Class A waste criteria. Upon solidifying the residual sludge, a "clean cap" of grout (1,080 gallons of liquid) will be placed into each tank prior to disposal of contingent liquid and DAW.

3.3.7.1 LSF Tank Modification for Contingent Liquid and DAW Disposal

The 24-inch inside diameter flanged manway opening on Tanks 2, 3, and 4 shall be extended to allow access to the tank following demolition of the building for waste disposal. The manways shall be extended by bolting a stainless steel spool piece to each flange. Stainless steel spool-pieces shall be constructed with a slip on flange at each end. A blind flange shall be welded or bolted to the extended end of the spool piece for removal during waste disposal. The 8-inch inside diameter flanged vent opening on each tank shall be extended to allow ventilation during waste disposal. The vents will be extended in similar fashion as the manway extensions. Provisions will be taken to prevent splash back, existing exhaust ductwork, and HEPA filtration.

To allow access to the LSF tanks during waste disposal, the Garage building, the areas below, between and above the 20,000-gallon tanks shall be backfilled with flowable fill and suitable compacted fill material in lifts. Upon completion of waste disposal, the remaining volume of the three eastern LSF tanks, the manway extension and vent extension shall be filled with flowable fill up to the bolt-on cover. The extensions will capped with 6 inches of soil backfill, non-woven geotextile, and geomembrane as part of the Interim Cap.

3.3.7.2 LSF Tank Modification for Future Non-liquid Waste Disposal by the Commonwealth

Tank 1 modification provides future capacity for non-liquid waste disposal following the IRP Remedial Action. Residual sludge stabilization in Tank 1 will be stabilized and cathodic protection will be provided for Tank 1. In addition, the manway and vent will be extended for IRP Cap access enabling future non-liquid waste disposal. Upon evaluation of backfill material and LSF tanks along with system design, cathodic protection will be installed in accordance with manufacturer requirements concurring with backfill material placement along tank perimeter.

The manway and vent extension will be in the same manner as for the eastern LSF tanks, Section 3.3.7.2. The extensions will have soil backfill placed adjacent to the extensions, non-woven geotextile and geomembrane booted to the Interim Cap.

3.3.8 Building 8 - Large Tank Farm

Bird droppings shall be disposed as specified in Subsection 3.3.1.2, Bird Droppings. Flowable fill shall be placed underneath the tanks to the bottom of the tanks. Flowable fill shall be placed from a chute or pump. Care shall be taken during placement to prevent flotation of the tanks. If required, the flowable fill shall be placed in 8- to 10-inch lifts, allowed to cure, and subsequent lifts placed. Required depths and locations are shown on the design drawings. The tanks shall be disposed as specified in Subsection 3.2.1.6, Pipes, Tanks, and Sumps. After the tanks have been filled, flowable fill shall be placed between the tanks to the existing ground level. The building shall be collapsed away from the tanks, and the debris shall be placed at the existing location.

3.3.9 Building 9 - Small Tank Farm

The water contained within the bermed area shall be pumped out and solidified as specified in Paragraph 3.2.1.1, Water. Flowable fill shall be placed underneath the tanks to the bottom of the tanks. Flowable fill shall be placed from a chute or pump. Care shall be taken during placement to prevent flotation of the tanks. If required, the flowable fill shall be placed in 8- to 10-inch lifts, allowed to cure, and subsequent lifts placed. Required depths and locations are shown on the design drawings. The bird droppings shall be disposed as specified in Subsection 3.3.1.2, Bird Droppings. The tanks shall be disposed as specified in Subsection 3.2.1.6, Pipes, Tanks, and Sumps. After the tanks have been filled, flowable fill shall be placed between the tanks to the existing ground level. The building shall be collapsed away from the tanks, and the debris shall be placed at the existing location.

3.3.10 Phase IIA Bunkers

Prior to demolition activities, the six southern-most bunkers (Cells 113 through 118) of Phase IIA shall be filled with flowable fill to provide protection of Phase I bunkers, and the western-most bunkers shall be filled with a 6-inch lift of flowable fill to provide a clean layer in the western cells. The southern bunkers shall be filled in lifts approximating 24 inches and less. Lids for the six southern cells shall be left off to permit curing; however, this shall be done in accordance with previously established practices. The locations and depths for flowable fill are shown on the design drawings.

The roof slab and exterior walls immediately north of the southern bunkers (Cells 113 through 118) shall be saw-cut to a minimum depth of 3 inches. The locations for saw-cuts are also shown on the design drawings.

Demolition of the walls and roof shall be performed in a systematic and progressive manner. A track-type excavator with an articulated concrete crushing attachment shall break and crush concrete into manageable pieces or units. Debris and rubble shall be processed or sized to minimize void spaces to the extent practicable. During placement of debris, soil material shall be mixed with the rubble to help minimize void spaces.

The walls and roof shall be collapsed inward. The transit mix washout tanks shall be removed and salvaged. Approximately 3 feet of all existing walls shall be retained to contain debris from the demolition. Prior to placing the initial soil lift, geotextile and the cover material, all protruding steel shall be cut or bent flush with the surface of the debris. The design drawings show the limits of demolition.

- End of Section -

ATTACHMENT A

DECISION TREE FOR WASTE DISPOSITION

Decision Tree for On-Site Waste Disposition

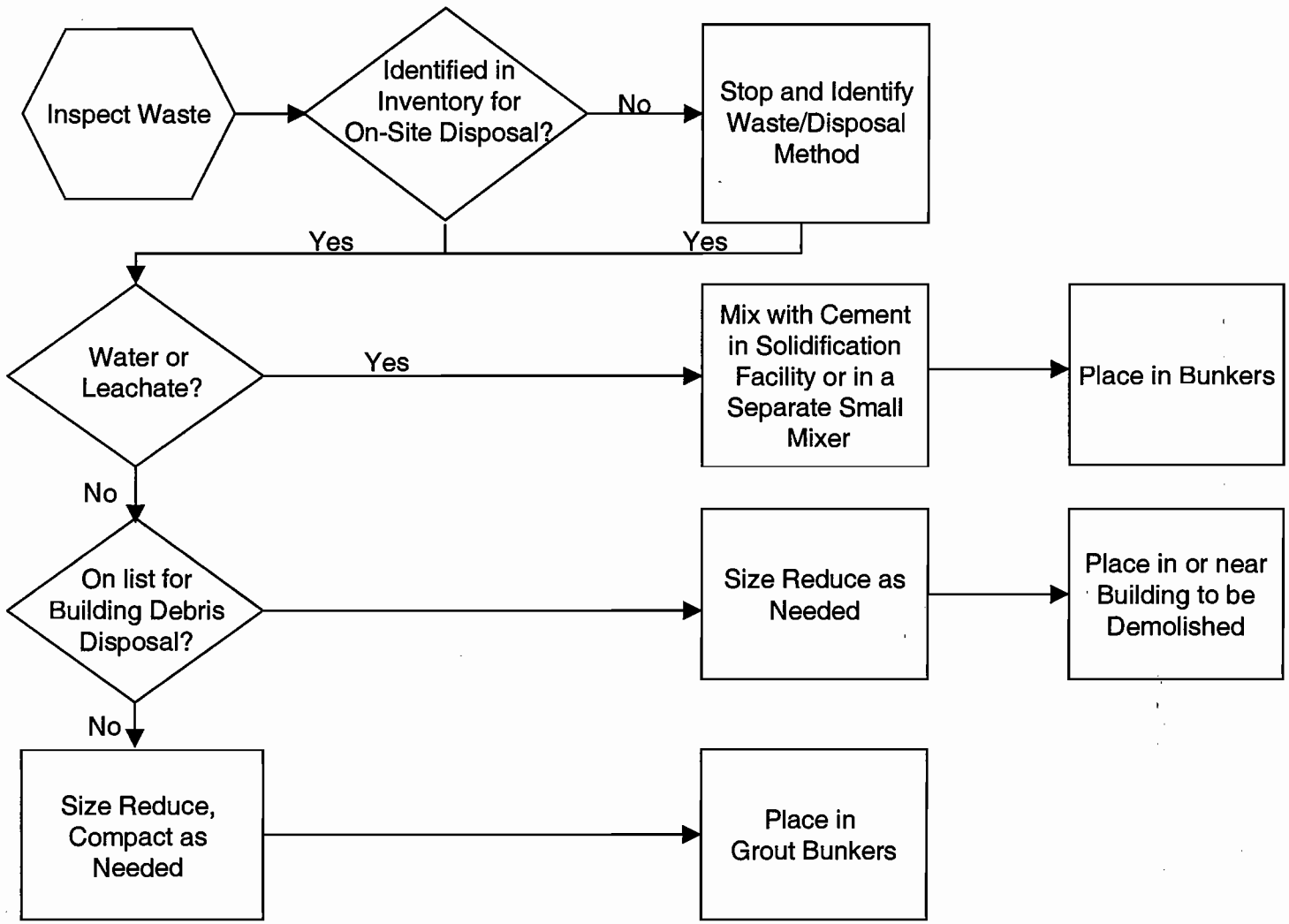

SECTION 02091

WELL ABANDONMENT

PART 1 - GENERAL

1.1 WORK INCLUDED

This section includes the labor, material, and equipment requirements for abandoning monitoring wells at the MFDS.

1.2 SUBMITTALS

1.2.1 Well Abandonment Report

Following well abandonment, the Subcontractor shall document the methods used at each well in a report. The following data shall be included in the report for each well.

- Well description
- Well location
- Depth of Well
- Diameter of Well
- Depth of Casing
- Materials and quantities used to fill well, detailed by specific zones, the formation present, and the method used
- Casing removed or left in place
- Abandonment method
- Daily logs
- Signature of driller (person doing work)
- Name and address or firm.

All information relative to the abandonment procedure shall be reported on a form titled Kentucky Water Well Record (DEP-4045) as incorporated in 401 KAR 6:310. The Subcontractor shall send copies to the site within 15 days of well abandonment. IT Corporation (IT) will send the form and letter to U.S. Environmental Protection Agency (EPA) and Kentucky Department of Environmental Protection (KDEP).

1.2.2 Grout Mix Designs

Grout mix designs as specified in Paragraph 2.1.1, Grout for Abandonment, shall be submitted to IT a minimum of 14 days prior to use.

1.3 CONTRACTOR QUALIFICATIONS

1.3.1 Licenses

The Subcontractor shall be a well driller registered by the Commonwealth of Kentucky. A copy of the registration shall be sent to IT prior to the work being performed.

1.3.2 Daily Logs

The Subcontractor is required to keep a daily log detailing the activities performed during the work. At a minimum, the daily log shall include times, activities performed, and materials used.

1.4 APPLICABLE PUBLICATIONS

Well abandonment activities shall comply, to the extent possible, to the following publications:

- 401 KAR 6:310 - Section 12, Abandonment of Wells
- ASTM D 5299-92, Standard Guide for Decommissioning of Groundwater Wells, Vadose Zone Monitoring Devices, Boreholes, and Other Devices for Environmental Activities
- EPA, Region 4, May 1996. Section 6, Design and Installation of Monitoring Wells Environmental Investigation Standard Operating Procedures and Quality Assurance Manual

PART 2 - PRODUCTS

2.1 MATERIALS

2.1.1 Grout for Abandonment

Grout for abandonment shall consist of a mixture of 94 pounds of Type II Portland cement, 3 to 5 pounds of powdered bentonite and 7 to 8 gallons of water. Powdered bentonite shall meet the specifications in Paragraph 2.1.2. Cement shall meet the requirements Paragraph 2.1.3.

2.1.2 Bentonite

Bentonite shall meet the requirements of API APEC 13A, Section 5. Bentonite for backfilling wells shall consist of Wyoming-type sodium montmorillonite or approved equal. Powdered bentonite only shall be used and shall be 200 mesh size or smaller.

2.1.3 Cement

Cement shall meet the requirements of ASTM C 150, Type II.

2.2 EQUIPMENT

2.2.1 Compressor

A compressor capable of supplying adequate circulation for the hole diameters and depths described in Table 02091-1.

2.2.2 Grout Equipment

Grout equipment will consist of a grout mixer, agitator, pump and piping connections. It must have the ability to supply, mix, stir and pump grout at a continuous uninterrupted rate. A high speed rotary mixer such as a colloidal or rotary-shear mixer will be used. It must be equipped with a water meter to measure the amount of water added to the grout slurry.

2.2.3 Tremie Pipe

The Tremie pipe shall be nominal 1-inch diameter schedule 40 steel pipe or PVC, threaded and collared, or an approved equivalent. The lower 2 feet of the bottom-most section shall be slotted to prevent plugging. Grout shall be pumped through a Tremie pipe.

2.2.4 Grout Pump

The Subcontractor shall furnish and operate a portable grout mixer/pump capable of performing all grouting operations.

PART 3 - EXECUTION

3.1 MONITORING WELLS TO ABANDON

The preliminary list of wells to abandon and well construction information is included in Table 02091-1, and the well locations are shown on the drawings. Wells to be abandoned were chosen based on meeting at least one of the following criteria:

- Are beneath the final cover or beneath the EMC bunker.
- Interfere with construction of the final cover/perimeter channel/North Channel.
- Are located north of the North Channel.
- Are of unknown or poor quality conditions.
- Are screened below the LNAN.
- Were not used in modeling effort for calibration of both 1995 and 1998 data.

The Field Geologist will confirm and mark the monitoring wells to be abandoned.

3.2 ABANDONMENT METHODOLOGY

Preparations for abandoning monitoring wells include spreading plastic around the well, cutting the well casing at the ground surface, and measuring the total well depth and depth to water. If a protection casing is present, it will be removed to the ground surface.

To eliminate the risk to workers, well casing material will not be pulled due to the possible contamination of material.

Three different type wells have been identified:

- PVC casing < 50 feet
- PVC casing > 50 feet and/or stainless steel/carbon steel
- Open hole.

Abandonment methods for each type are presented here.

3.2.1 PVC Casing < 50 Feet

For wells with PVC casings < 50 feet, the well shall be split from the top of the casing to the bottom of the well. Casings shall be split by driving a 2 -inch steel cone with knife edge. The splitter shall be left at the bottom of the well to prevent pulling the PVC casing during tool extraction. Splash protection such as a cloth or plastic cover shall be provided at the top of the casing during splitting.

After the well casing has been split, the casing shall be filled with cement/bentonite grout using a Tremie pipe from the bottom of the casing to the previously measured water level. The cement/bentonite shall stand in the well for a minimum of 12 hours.

The well casing shall be backfilled to the ground surface by pumping through a Tremie pipe with the bottom end of the pipe always being maintained below the top of the grout slurry within the well. Grout shall be applied in as nearly a continuous procedure from the top of the cement/bentonite fill to the top of casing as practical to minimize segregation, dilution, and bridging.

After 24 hours, the abandoned site will be checked for grout settlement. Any settlement depression will be filled with grout and rechecked 24 hours later.

3.2.2 PVC Casing > 50 Feet and/or Stainless Steel/Carbon Steel Casing

For wells with PVC casings > 50 feet and/or stainless steel/carbon steel casings, the well shall be pressure grouted with cement/bentonite grout, maintaining a pressure of 30 psi, from the bottom of the casing to approximately 8 to 10 feet below ground surface. The grout shall stand in the well for a minimum of 12 hours.

The well casing shall be backfilled to the ground surface with cement grout by pumping through a Tremie pipe with the bottom end of the pipe always being maintained below the top of the grout slurry within the well. Grout shall be applied in as nearly a continuous procedure from the bottom of the well to the top of casing as practical to minimize segregation, dilution, and bridging.

After 24 hours, the abandoned site will be checked for grout settlement. Any settlement depression will be filled with grout and rechecked 24 hours later.

3.2.3 Open Hole

Open hole wells will be grouted through a Tremie pipe with the bottom end of the pipe always being maintained below the top of the grout slurry within the well. Grout shall be applied in as nearly a continuous procedure as practical to minimize segregation, dilution, and bridging from the top of the borehole to 8 to 10 feet below ground surface. The grout shall stand in the well for a minimum of 12 hours.

The well casing shall be backfilled to the ground surface with cement grout by pumping through a Tremie pipe with the bottom end of the pipe always being maintained below the top of the grout slurry within the well. Grout shall be applied in as nearly a continuous procedure from the bottom of the well to the top of casing as practical to minimize segregation, dilution, and bridging.

After 24 hours, the abandoned site will be checked for grout settlement. Any settlement depression will be filled with grout and rechecked 24 hours later.

3.3 WASTE MANAGEMENT

All waste including any part of a casing, cuttings, or well water generated during the abandonment operations shall be placed in 55-gallon drums for placement in the EMC Bunkers. All drums shall be properly labeled with the well number from which the water was generated. Drummed water shall be sampled and disposed accordingly.

- End of Section -

Table 02091-1
Monitoring Wells Remedial Action Plan
Maxey Flats Disposal Site
Fleming County, Kentucky

Well Number	Geo. Unit	Location	Well Diameter (in)	Well Material	Length of Well Casing (ft)	Abandon or Retain
ESI-01	LMB	outside capped area	2	stain. steel	24.3	to be retained
ESI-02	LMB	outside capped area	2	stain. steel	17.6	to be retained
ESI-03	LMB	outside capped area	2	stain. steel	20.5	to be abandoned
ESI-04	LMB	outside capped area	2	stain. steel	26.4	to be retained
ESI-05	LMB	outside capped area	2	stain. steel	24.6	to be retained
ESI-06	LMB	outside capped area	2	stain. steel	27.6	to be retained
ESI-07	LMB	outside capped area	2	stain. steel	22.7	to be abandoned
ESI-08	LMB	outside capped area	2	stain. steel	22.1	already abandoned or destroyed
ESI-09	LMB	outside capped area	2	stain. steel	16.2	to be abandoned
ESI-10	LMB	outside capped area	2	stain. steel	27.9	to be abandoned
ESI-11	LNAN	outside capped area	2	stain. steel	35.6	to be abandoned
ESI-12	LNAN	outside capped area	2	stain. steel	41.4	to be retained
ESI-13	UFRM	outside capped area	2	stain. steel	45.8	to be abandoned
ESI-14	LMB	inside capped area	2	stain. steel	20.6	already abandoned or destroyed
ESI-15	SUNB	outside capped area	2	stain. steel	80.2	abandoned
ESI-16	UFRM	outside capped area	2	stain. steel	41.2	to be abandoned
ESI-17	UFRM	inside capped area	2	stain. steel	59.6	already abandoned or destroyed
ESI-18	SUNB	inside capped area	2	stain. steel	111.7	already abandoned or destroyed
ESI-19	LMB	outside capped area	2	stain. steel	21.8	to be retained
ESI-20	SUNB	outside capped area	2	stain. steel	112.4	to be retained
ESI-22	SUNB	outside capped area	2	stain. steel	93.4	to be abandoned
ESI-23	SUNB	outside capped area	2	stain. steel	113.2	to be retained
ESI-24	LNAN	north of North Channel	2	stain. steel	31.3	to be retained
WP-1	LNAN	outside capped area	2	stain. steel	8.6	to be abandoned
WP-2	UFRM	outside capped area	2	stain. steel	8.6	to be abandoned

Table 02091-1
Monitoring Wells Remedial Action Plan
Maxey Flats Disposal Site
Fleming County, Kentucky

Well Number	Geo. Unit	Location	Well Diameter (in)	Well Material	Length of Well Casing (ft)	Abandon or Retain
WP-3	UFRM	outside capped area	2	stain. steel	8.3	to be abandoned
WP-4	LNAN	outside capped area	2	stain. steel	9.6	to be abandoned
UA-1	SUNB	north of North Channel	5.8	open hole	83.4	to be abandoned
UA-2	OS	north of North Channel	5.8	open hole	134.61	to be abandoned
UA-3	FM	north of North Channel	5.8	open hole	56.57	to be abandoned
UA-4	COF	north of North Channel	5.8	open hole	325.85	to be abandoned
UB-1A	LMB	inside capped area	5.8	open hole	30.19	to be abandoned
UB-2	OS	inside capped area	5.8	open hole	330.35	to be abandoned
UB-3	FM	inside capped area	5.8	open hole	93.49	to be abandoned
UB-4	BS	inside capped area	5.8	open hole	134.27	to be abandoned
UC-1	unknown	outside capped area	unknown	unknown	unknown	to be abandoned
UC-2	unknown	outside capped area	unknown	unknown	unknown	to be abandoned
UD-1	unknown	outside capped area	unknown	unknown	unknown	to be abandoned
UE-01	LMB	outside capped area	1.5	galv. steel	20.09	to be abandoned
UE-02	LMB	outside capped area	1.5	galv. steel	19.44	to be retained
UE-03	LMB	outside capped area	1.5	galv. steel		to be abandoned
UE-07	LMB	outside capped area	1.5	galv. steel	24.58	to be abandoned
UE-08	LMB	outside capped area	1.5	galv. steel	28.81	to be abandoned
UE-09	LMB	outside capped area	1.5	galv. steel	23.64	to be abandoned
UE-11	LMB	outside capped area	1.5	galv. steel	20.24	to be retained
UF-01	LMB	outside capped area	2.5	Sch. 40 pvc	19.36	to be retained
UF-02	LMB	outside capped area	2.5	Sch. 40 pvc	13.33	to be retained
UF-03	LMB	outside capped area	2.5	Sch. 40 pvc	15.88	to be abandoned
UF-04	LMB	outside capped area	2.5	Sch. 40 pvc	15.43	to be abandoned
UF-05	LMB	outside capped area	2.5	Sch. 40 pvc	20.36	to be retained

Table 02091-1
Monitoring Wells Remedial Action Plan
Maxey Flats Disposal Site
Fleming County, Kentucky

Well Number	Geo. Unit	Location	Well Diameter (in)	Well Material	Length of Well Casing (ft)	Abandon or Retain
UF-06	LMB	outside capped area	2.5	Sch. 40 pvc	19.23	to be abandoned
UF-08	LMB	outside capped area	2.5	Sch. 40 pvc	23.87	to be abandoned
UF-09	LMB	outside capped area	2.5	Sch. 40 pvc	27.07	to be abandoned
UF-10	LMB	outside capped area	2.5	Sch. 40 pvc	30.38	to be abandoned
UF-11	LMB	outside capped area	2.5	Sch. 40 pvc	28.73	to be abandoned
UF-12	LMB	outside capped area	2.5	Sch. 40 pvc	27.66	to be abandoned
UF-13	LMB	outside capped area	2.5	Sch. 40 pvc	26.83	to be abandoned
UF-14	LMB	outside capped area	2.5	Sch. 40 pvc	25.52	to be abandoned
UF-15	LMB	outside capped area	2.5	Sch. 40 pvc	23.99	to be abandoned
UF-16	LMB	outside capped area	2.5	Sch. 40 pvc	20.22	to be abandoned
UF-17	LNAN	outside capped area	2.5	Sch. 40 pvc	44.67	to be abandoned
UF-18	LNAN	outside capped area	2.5	Sch. 40 pvc	45.14	to be abandoned
UF-19	LNAN	outside capped area	2.5	Sch. 40 pvc	43.97	to be abandoned
UF-20	LNAN	outside capped area	2.5	Sch. 40 pvc	45.14	to be abandoned
UF-21	LNAN	outside capped area	2.5	Sch. 40 pvc	38.26	to be abandoned
UF-22	LNAN	outside capped area	2.5	Sch. 40 pvc	34.53	to be abandoned
UF-23	LNAN	outside capped area	2.5	Sch. 40 pvc	29.59	to be abandoned
UF-24	LNAN	outside capped area	2.5	Sch. 40 pvc	29.48	to be abandoned
UF-25	LNAN	outside capped area	2.5	Sch. 40 pvc	31.19	to be abandoned
UF-26	LNAN	outside capped area	2.5	Sch. 40 pvc	28.68	to be abandoned
UF-27	LNAN	outside capped area	2.5	Sch. 40 pvc	19.19	to be abandoned
UF-28	LNAN	outside capped area	2.5	Sch. 40 pvc	21.95	to be abandoned
UF-29	LNAN	outside capped area	2.5	Sch. 40 pvc	23.58	to be abandoned
UF-30	LNAN	outside capped area	2.5	Sch. 40 pvc	27.19	to be abandoned
UF-31	LNAN	outside capped area	2.5	Sch. 40 pvc	32.38	to be abandoned

Table 02091-1
Monitoring Wells Remedial Action Plan
Maxey Flats Disposal Site
Fleming County, Kentucky

Well Number	Geo. Unit	Location	Well Diameter (in)	Well Material	Length of Well Casing (ft)	Abandon or Retain
UF-32	LNAN	inside capped area	2.5	Sch. 40 pvc	34.41	to be abandoned
UF-33	LNAN	inside capped area	2.5	Sch. 40 pvc	16.63	to be abandoned
UF-34	LNAN	inside capped area	2.5	Sch. 40 pvc	25.34	already abandoned or destroyed
UF-35	LNAN	inside capped area	2.5	Sch. 40 pvc	24.54	already abandoned or destroyed
UF-36	LNAN	inside capped area	2.5	Sch. 40 pvc	66.43	already abandoned or destroyed
UF-37	LMB	inside capped area	2.5	Sch. 40 pvc	18.85	to be retained
UF-38	LMB	inside capped area	2.5	Sch. 40 pvc	16.41	already abandoned or destroyed
UF-39	LMB	inside capped area	2.5	Sch. 40 pvc	19.82	already abandoned or destroyed
UF-40	LMB	outside capped area	2.5	Sch. 40 pvc	10.24	already abandoned or destroyed
UF-41	LNAN	outside capped area	2.5	Sch. 40 pvc	36.7	already abandoned or destroyed
UF-42	LMB	outside capped area	2.5	Sch. 40 pvc	14.84	to be abandoned
UF-43	LMB	outside capped area	2.5	Sch. 40 pvc	25.08	to be abandoned
UF-44	LMB	outside capped area	2.5	Sch. 40 pvc	21.76	to be abandoned
UF-45	LMB	outside capped area	2.5	Sch. 40 pvc	21.63	to be retained
UF-46	LMB	outside capped area	2.5	Sch. 40 pvc	21.45	to be abandoned
UF-47	LMB	outside capped area	2.5	Sch. 40 pvc	29.48	to be abandoned
UF-48	LMB	outside capped area	2.5	Sch. 40 pvc	13.8	to be abandoned
UF-49	LMB	outside capped area	2.5	Sch. 40 pvc	19.57	to be abandoned
UG-01	LMB	outside capped area	2.5	Sch. 40 pvc	23.72	to be abandoned
UG-02	LMB	outside capped area	2.5	Sch. 40 pvc	27.44	already abandoned or destroyed
UG-03	UNAN	outside capped area	2.5	Sch. 40 pvc	32.58	already abandoned or destroyed
UG-04	LMB	outside capped area	2.5	Sch. 40 pvc	27.9	already abandoned or destroyed
UG-05	LMB	outside capped area	2.5	Sch. 40 pvc	25.2	already abandoned or destroyed
UG-06	UNAN	outside capped area	2.5	Sch. 40 pvc	29.88	already abandoned or destroyed
UG-07	LMB	outside capped area	2.5	Sch. 40 pvc	26.19	to be retained

Table 02091-1
Monitoring Wells Remedial Action Plan
Maxey Flats Disposal Site
Fleming County, Kentucky

Well Number	Geo. Unit	Location	Well Diameter (in)	Well Material	Length of Well Casing (ft)	Abandon or Retain
UG-08	LMB	outside capped area	2.5	Sch. 40 pvc	30.72	already abandoned or destroyed
UG-09	LMB	outside capped area	2.5	Sch. 40 pvc	29.03	already abandoned or destroyed
UG-10	LMB	outside capped area	2.5	Sch. 40 pvc	27.64	already abandoned or destroyed
UG-11	LMB	outside capped area	2.5	Sch. 40 pvc	25.68	to be retained
UG-12	UNAN	outside capped area	2.5	Sch. 40 pvc	27.24	to be retained
UG-13	LMB	outside capped area	2.5	Sch. 40 pvc	28.12	to be abandoned
UG-14	LNAN	inside capped area	2.5	Sch. 40 pvc	28.1	to be abandoned
UG-15	LMB	inside capped area	2.5	Sch. 40 pvc	9.59	to be abandoned
UG-16	LMB	inside capped area	2.5	Sch. 40 pvc	12.3	to be abandoned
UG-17	LMB	inside capped area	2.5	Sch. 40 pvc	25.18	to be abandoned
UG-18	LMB	inside capped area	2	Sch. 40 pvc	26.67	to be abandoned
UG-19	LMB	inside capped area	2.5	Sch. 40 pvc	22.12	to be abandoned
UH-1	LMB	north of North Channel	2.5	Sch. 40 pvc		to be abandoned
UH-2	LMB	north of North Channel	2.5	Sch. 40 pvc		to be abandoned
UH-3	LMB	north of North Channel	2.5	Sch. 40 pvc		to be abandoned
UH-4	LMB	north of North Channel	2.5	Sch. 40 pvc		to be abandoned
UH-5	LMB	north of North Channel	2.5	Sch. 40 pvc		to be abandoned
UH-6	LMB	north of North Channel	2.5	Sch. 40 pvc		to be abandoned
UH-7	LMB	north of North Channel	2.5	Sch. 40 pvc		to be abandoned
UH-8	LMB	north of North Channel	2.5	Sch. 40 pvc		to be abandoned
UH-9	LMB	north of North Channel	2.5	Sch. 40 pvc		to be abandoned
UI-1	LMB	north of North Channel	2.5	Sch. 40 pvc	21.39	to be abandoned
UI-2	LMB	north of North Channel	2.5	Sch. 40 pvc	21.54	to be abandoned
UI-3	LMB	outside capped area	2.5	Sch. 40 pvc	22.92	to be abandoned
UI-4	LMB	outside capped area	2.5	Sch. 40 pvc	23.65	to be abandoned

Table 02091-1
Monitoring Wells Remedial Action Plan
Maxey Flats Disposal Site
Fleming County, Kentucky

Well Number	Geo. Unit	Location	Well Diameter (in)	Well Material	Length of Well Casing (ft)	Abandon or Retain
UI-5	LMB	outside capped area	2.5	Sch. 40 pvc	21.65	to be abandoned
UI-6	LMB	outside capped area	2.5	Sch. 40 pvc	22.27	to be abandoned
UI-7	LMB	outside capped area	2.5	Sch. 40 pvc	21.49	to be abandoned
UI-8	LMB	outside capped area	2.5	Sch. 40 pvc	21.59	to be abandoned
UI-9	LMB	outside capped area	2.5	Sch. 40 pvc	22.34	to be abandoned
UI-10	LMB	outside capped area	2.5	Sch. 40 pvc	22.11	to be abandoned
UJ-1	LMB	outside capped area	2.5	Sch. 40 pvc	25.22	to be abandoned
UJ-2	LMB	outside capped area	2.5	Sch. 40 pvc	23.86	to be abandoned
UJ-3	LMB	outside capped area	2.5	Sch. 40 pvc	23.83	to be abandoned
UJ-4	LMB	outside capped area	2.5	Sch. 40 pvc	25.37	to be abandoned
UJ-5	LMB	outside capped area	2.5	Sch. 40 pvc	26.42	to be abandoned
UJ-6	LMB	outside capped area	2.5	Sch. 40 pvc	25.61	to be abandoned
UJ-7	LMB	outside capped area	2.5	Sch. 40 pvc	25.91	to be abandoned
UJ-8	LMB	outside capped area	2.5	Sch. 40 pvc	25.86	to be abandoned
UK-1	LMB	outside capped area	2.5	Sch. 40 pvc	13.85	to be retained
UK-2	LMB	outside capped area	2.5	Sch. 40 pvc	12.38	to be abandoned
UK-3	LMB	inside capped area	2.5	Sch. 40 pvc	31.52	already abandoned or destroyed
UK-4	UNAN	inside capped area	2.5	Sch. 40 pvc	25.06	already abandoned or destroyed
UK-5	LNAN	outside capped area	2.5	Sch. 40 pvc	22.7	already abandoned or destroyed
UK-6	UNAN	inside capped area	2.5	Sch. 40 pvc	18.2	already abandoned or destroyed
UL-1	LMB	outside capped area	2	stain. steel	11.8	to be abandoned
UL-2	LMB	outside capped area	2	stain. steel	14.2	to be abandoned
UL-3	UFRM	outside capped area	2	stain. steel	46.7	to be abandoned
UL-4	UFRM	outside capped area	2	stain. steel	47	to be abandoned
W1		inside capped area				to be abandoned

Table 02091-1
Monitoring Wells Remedial Action Plan
Maxey Flats Disposal Site
Fleming County, Kentucky

Well Number	Geo. Unit	Location	Well Diameter (in)	Well Material	Length of Well Casing (ft)	Abandon or Retain
W2		inside capped area				to be abandoned
W3		inside capped area				to be abandoned
W4		inside capped area				to be abandoned
W5		inside capped area				to be abandoned
W6		inside capped area				to be abandoned
W7		outside capped area	2.5	galv. steel		to be abandoned
W8		inside capped area	2.5	stain. steel		to be abandoned
1E		outside capped area	2	galv. steel	90+	to be abandoned
2E		outside capped area			90+	to be abandoned
3E		outside capped area	4	PVC	90+	to be abandoned
4E		outside capped area	2.5	PVC	90+	to be abandoned
5E		outside capped area			320+	already abandoned or destroyed
6E		outside capped area			50+	already abandoned or destroyed
7E		outside capped area			65+	to be abandoned
8E		outside capped area	2.5	PVC	90+	already abandoned or destroyed
9E		outside capped area		PVC	90+	already abandoned or destroyed
10E		outside capped area	2	PVC	90+	to be abandoned
11E	LNAN	outside capped area	2	PVC	52.18	to be abandoned
12E		outside capped area	2	PVC	90+	to be abandoned
13E		outside capped area	2	PVC	90+	to be abandoned
14E		outside capped area			90+	already abandoned or destroyed
N2B	LMB	outside capped area	2	PVC	12.7*	to be retained
ITPZ-01a	LMB	north of North Channel	2	Sch. 40 pvc	19.78	to be abandoned
ITPZ-02	LMB	north of North Channel	2	Sch. 40 pvc	20.16	to be abandoned
ITPZ-03	LMB	north of North Channel	2	Sch. 40 pvc	12.38	to be abandoned

Table 02091-1
Monitoring Wells Remedial Action Plan
Maxey Flats Disposal Site
Fleming County, Kentucky

Well Number	Geo. Unit	Location	Well Diameter (in)	Well Material	Length of Well Casing (ft)	Abandon or Retain
UB-1	No Information Available					to be abandoned

SECTION 02094

SUMP EXTENSIONS

PART 1 - GENERAL

1.1 WORK INCLUDED

This section describes all material and labor required to extend the sumps that may be accessed after the Initial Remedial Phase (IRP) cap is in place. The sumps to be extended will be determined based on the results of the LR/D phase pumping operations. Selected sumps will be left dormant. These sumps will remain accessible under the IRP Cap. Refer to Table 02094-1 for final sump disposition list.

PART 2 - PRODUCTS

2.1 EXTENSION PIPE

Pipe extensions shall be schedule 40 steel to match the existing sump casings (typically 10- or 12-inch nominal pipe sizes). The pipe lengths shall be as shown on the drawings.

2.2 SLEEVES

The sleeves shall be stainless steel single-based repair clamps.

2.3 CAPS

The caps shall be fabricated using blind or reducing flanges and gaskets as shown on the drawings.

2.3.1 Extended Sump Caps

The caps shall be fabricated using blind or reducing flanges and gaskets.

2.3.2 Dormant Sump Caps

Caps for the steel sump casings shall be fabricated using 6(±½)-inch long pipe section and ½-inch thick steel plate as shown on the drawings. The pipe used for fabricating the caps shall be slightly larger than the sump being capped. The cap diameters shall be verified by field measurements prior to fabrication.

2.4 MONITORING PROBE ASSEMBLIES

See the drawings for monitoring probe requirements.

PART 3 - EXECUTION

3.1 SUMPS TO BE EXTENDED OR LEFT DORMANT

The sumps to be extended or left dormant shall be determined based on the results of the LR/D phase.

3.2 EXTENSION METHODOLOGY

The sump casings shall be extended by fabricating an extension on-site. The extensions shall be a steel pipe the same diameter as the existing pipe with a flange fitting welded to the opposite end of the extension pipe.

The pipe extension and repair clamp shall be placed on the existing sump casing. The compression bolts shall be tightened to attach the extension pipe to the existing sump casing. Sumps to be monitored shall be fitted with flanges, gaskets, reducing flanges, and monitoring assemblies as shown on the design drawings.

Soil fill around the sump extensions shall be compacted as specified in Section 02300, EARTHWORK. Care shall be taken to ensure that the sump extensions are not damaged during soil fill operations.

The geomembrane shall be sealed to the sump extension as shown on the drawings.

3.3 Dormant Sump Methodology

The sump casings that are to be left dormant below finish grade shall be cut to below grade or extended.

The steel cap shall be placed over the casing and connected with screws. After placement, the cap shall be sealed with silicone caulk.

The horizontal and vertical coordinates of the dormant sumps shall be recorded by a surveyor before placing soil fill around the sumps.

Soil around the dormant sumps in fill areas shall be compacted as specified in Section 02300, Earthwork. The geomembrane shall be sealed over the dormant sump casings.

- End of Section -

Table 02094-1
Final Sump Disposition List

Areas	Sump ID	Notes
1	27-5	ABANDON
	27-9	MONITOR
	27-8	ABANDON
	27-6	ABANDON
	27-10	ABANDON
	27-M	ABANDON
	27-7	ABANDON
	27-11	MONITOR
	28-W	MONITOR
	28-4	ABANDON
	28-8	ABANDON
	28-12	MONITOR
	28-7	ABANDON
	28-9	ABANDON
	28-10	ABANDON
	28-M	ABANDON
	28-6	MONITOR
	28-11	MONITOR
	29-5	MONITOR
	29-9	ABANDON
	29-8	ABANDON
	29-4	ABANDON
	29-7	ABANDON
	29-10	ABANDON
	29-6	MONITOR
	29-3	ABANDON
	29-W	MONITOR
2	30-4	MONITOR
	30-6	ABANDON
	30-M	ABANDON
	30-7	ABANDON
	30-8	MONITOR
	30-5	ABANDON
	30-9	ABANDON
	30-E	ABANDON
	30-10	MONITOR
	31-7	MONITOR
	31-2	MONITOR
	31-6	ABANDON
	31-10	ABANDON
	31-4	ABANDON
	31-9	MONITOR
	31-3	ABANDON
	31-11	ABANDON
	31-8	ABANDON
	31-5	MONITOR
	32-7	ABANDON
	32-W	ABANDON

Sumps designated as "KEEP UNDER LINER" were cut off below finish grade, capped, and will be able to be used by the Commonwealth in the future if the need arises.

Table 02094-1
Final Sump Disposition List

Areas	Sump ID	Notes
	32-9	MONITOR
	32-4	ABANDON
	32-8	ABANDON
	32-E	MONITOR
	41	ABANDON
3	35-7	ABANDON
	35-6	MONITOR
	35-3	ABANDON
	35-5	ABANDON
	35-8	ABANDON
	35-2	MONITOR
	35-1	ABANDON
	35-4	ABANDON
	36-6	MONITOR
	36-E	ABANDON
	36-5	ABANDON
	36-7	MONITOR
	36-4	ABANDON
	36-3	MONITOR
	47-W	ABANDON
	47-E	ABANDON
	33-1	ABANDON
	33-2	ABANDON
	33-3	ABANDON
	33-4	ABANDON
	33-5	ABANDON
	33-6	ABANDON
	33-7	ABANDON
	33-8	ABANDON
	33-9	ABANDON
	33-10	ABANDON
	33-11	ABANDON
	33-12	ABANDON
	33-13	ABANDON
	33-14	ABANDON
	33-15	ABANDON
	33-16	ABANDON
	33-17	ABANDON
	33-18	ABANDON
	33-19	ABANDON
4	24-7	ABANDON
	24-6	MONITOR
	24-8	ABANDON
	24-4	ABANDON
	24-9	ABANDON
	24-3	ABANDON
	24-5	MONITOR
	25-9	MONITOR

Table 02094-1
Final Sump Disposition List

Areas	Sump ID	Notes
	25-4	ABANDON
	25-5	MONITOR
	25-8	ABANDON
	25-6	ABANDON
	25-3	ABANDON
	25-7	MONITOR
	26-2	MONITOR
	26-6	ABANDON
	26-5	ABANDON
	26-8	ABANDON
	26-3	MONITOR
	26-7	ABANDON
	26-4	MONITOR
5	16-L	ABANDON
	22-L	ABANDON
	17-L	ABANDON
	14-L	ABANDON
	13-L	ABANDON
	18-9	MONITOR
	18-E	ABANDON
	18-7	ABANDON
	18-5	ABANDON
	18-8	ABANDON
	18-6	MONITOR
	18-W	ABANDON
	20-12	ABANDON
	20-8	ABANDON
	20-W	MONITOR
	20-5	ABANDON
	20-9	MONITOR
	20-10	ABANDON
	20-7	MONITOR
	20-E	ABANDON
	20-6	ABANDON
	20-11	MONITOR
	23-9	MONITOR
	23-4	ABANDON
	23-8	ABANDON
	23-5	MONITOR
	23-6	MONITOR
	23-7	ABANDON
	34-1	ABANDON
	34-2	ABANDON
	34-3	ABANDON
	34-4	ABANDON
6	10-9	MONITOR
	10-5	ABANDON
	10-10	ABANDON

Table 02094-1
Final Sump Disposition List

Areas	Sump ID	Notes
	10-8	MONITOR
	10-4	ABANDON
	10-3	ABANDON
	10-7	MONITOR
	15-4	MONITOR
	15-5	MONITOR
	15-7	ABANDON
	15-6	MONITOR
	15-8	MONITOR
	11-5	MONITOR
	11-S/E	ABANDON
	11-7	ABANDON
	11-4	ABANDON
	11-S/W	ABANDON
	11-6	MONITOR
	19-W	ABANDON
	19-7	MONITOR
	19-5	MONITOR
	19-8	ABANDON
	19-E	ABANDON
	19-6	MONITOR
7	1-3	ABANDON
	1-1	ABANDON
	1-2	MONITOR
	5-S2	ABANDON
	5-S3	ABANDON
	8-L	ABANDON
	6-L	ABANDON
	4-L	ABANDON
	7-4	MONITOR
	7-8	ABANDON
	7-9	ABANDON
	7-3	ABANDON
	7-5	MONITOR
	7-2	ABANDON
	7-7	MONITOR
	7-6	ABANDON
	3-6	ABANDON
	1-S	ABANDON
	1-S2	ABANDON
	3-2	MONITOR
	3-3	ABANDON
	2-6	MONITOR
	2-5	ABANDON
	2-4	ABANDON
	3-7	ABANDON
	3-4	MONITOR
	3-5	ABANDON

Table 02094-1
Final Sump Disposition List

Areas	Sump ID	Notes
	12-L	ABANDON
	9-L	ABANDON
8	40-1	ABANDON
	40-11	ABANDON
	40-19	MONITOR
	40-16	ABANDON
	40-21	ABANDON
	40-14	KEEP UNDER LINER
	40-15	MONITOR
	44-19	ABANDON
	44-14	MONITOR
	44-20	MONITOR
	42-11	MONITOR
	42-19	MONITOR
	42-18	ABANDON
	43-15	ABANDON
	43-13	MONITOR
	43-12	KEEP UNDER LINER
	43-11	ABANDON
	43-10	KEEP UNDER LINER
9	40-3	ABANDON
	40-17	MONITOR
	40-20	ABANDON
	40-2	ABANDON
	40-18	ABANDON
	44-21	ABANDON
	44-10	ABANDON
	44-7	ABANDON
	44-22	MONITOR
	44-8	KEEP UNDER LINER
	44-3	KEEP UNDER LINER
	42-6	ABANDON
	42-7	KEEP UNDER LINER
	42-17	ABANDON
	42-20	MONITOR
	42-21	ABANDON
	43-9	MONITOR
	43-16	ABANDON
	43-7	MONITOR
	43-17	ABANDON
10	40-5	ABANDON
	40-6	ABANDON
	40-22	MONITOR
	44-5	MONITOR
	44-4	ABANDON
	42-5	ABANDON
	48-E	ABANDON
	48-W	ABANDON

Table 02094-1
Final Sump Disposition List

Areas	Sump ID	Notes
	49-DW	ABANDON
	52-DW	ABANDON
	52-1	ABANDON
	49-1	ABANDON
	50-DW	ABANDON
	50-1	ABANDON
	50-2	ABANDON
	50-3	ABANDON
	51	ABANDON
11	37-1	ABANDON
	37-3	MONITOR
	39-5	ABANDON
	39-3	ABANDON
	39-1	MONITOR
	38-2	ABANDON
	38-5	MONITOR
	38-3	ABANDON
	38-1	ABANDON
	SLT-4	ABANDON
	SLT-1	ABANDON
	46-1	MONITOR
	SLT-2	ABANDON
12	SLT-3	ABANDON
	46-2	MONITOR
	46-3	MONITOR
	38-4	MONITOR
	38-6	ABANDON
	45-2	ABANDON
	45-1	MONITOR
	39-4	MONITOR
	39-2	ABANDON
	37-5	ABANDON
	37-4	MONITOR
	37-2	ABANDON

SECTION 02095

SUMP ABANDONMENT

PART 1 - GENERAL

1.1 WORK INCLUDED

This section describes all material and labor required to abandon the sumps during the RW phase of the project. Sumps to be abandoned will be selected based on the production rates observed during the LR/D phase. Refer to Table 02095-1 for the final sump disposition list.

PART 2 - PRODUCTS

2.1 MATERIALS

2.1.1 Steel Caps

Caps for the steel sump casings shall be fabricated using 6 (±½)-inch long pipe section and ½-inch thick steel plate as shown on the drawings. The pipe used for fabricating the caps shall be slightly larger than the sump being capped. The cap diameters shall be verified by field measurements prior to fabrication.

2.1.2 PVC Caps

Standard Schedule 40 PVC caps shall be used to cap the PVC sump casings. Various sizes will be needed and sizes shall be verified by field measurements.

2.1.3 Concrete

Concrete for filling the sumps shall be ready-mix concrete with a slump between 4 and 6 inches, and a maximum aggregate size of 1 inch.

2.1.4 Flowable Fill (Grout)

Flowable fill for filling sumps shall be ready-mix grout.

2.2 EQUIPMENT

2.2.1 Tremie Pipe and Funnel

The tremie pipe shall be Schedule 40 steel or PVC pipe, threaded and collared, or an approved equivalent. The lower 2 feet of the bottom-most section shall be slotted to prevent plugging. The funnel shall be sufficiently large to allow efficient tremie operation with appropriate fittings for attachment to the tremie pipe.

2.2.2 Concrete Hopper

The concrete hopper shall be sufficiently large to allow efficient sump backfilling operations. The concrete hopper may be transported by an all-terrain forklift during sump backfill operations.

PART 3 - EXECUTION

3.1 SUMPS TO BE ABANDONED

The sumps to be abandoned shall be determined following the results of the LR/D phase.

3.2 ABANDONMENT METHODOLOGY

3.2.1 Filling

Casings shall be cut to below grade as shown on the drawings. The sump casing shall then be backfilled with concrete or flowable fill. The concrete shall be placed by pumping through a tremie pipe with the bottom end of the pipe always being maintained below the top of the concrete within the casing, or concrete seal be placed using a concrete hopper. Concrete shall be applied in as nearly a continuous procedure to the top of casing as practical to minimize segregation, dilution, and bridging. Flowable fill shall be placed using a grout pump or pump truck.

3.2.2 Metal Casings and Caps

The metal caps shall be fabricated prior to delivery to the on-site. The caps shall be fabricated of a 6 (+-½) inch long section of steel pipe with a larger diameter than the existing casing with a ½-inch thick steel plate welded to one end of the pipe section. The steel cap shall be placed over the existing casing and connected with set screws as shown on the drawings. After placement, the cap shall be sealed with silicon caulk.

3.2.3 PVC Casings and Caps

The existing PVC casing shall be cleaned, and the PVC cap shall be glued in place on the existing PVC casings as shown on the drawings.

3.2.4 Finishing

Soil fill around the abandoned sumps in fill areas shall be compacted as specified in Section 02300, EARTHWORK. The geomembrane shall be sealed to the abandoned sump casings as shown on the drawings.

- End of Section -

Table 02095-1
Final Sump Disposition List

Areas	Sump ID	Notes
1	27-5	ABANDON
	27-9	MONITOR
	27-8	ABANDON
	27-6	ABANDON
	27-10	ABANDON
	27-M	ABANDON
	27-7	ABANDON
	27-11	MONITOR
	28-W	MONITOR
	28-4	ABANDON
	28-8	ABANDON
	28-12	MONITOR
	28-7	ABANDON
	28-9	ABANDON
	28-10	ABANDON
	28-M	ABANDON
	28-6	MONITOR
	28-11	MONITOR
	29-5	MONITOR
	29-9	ABANDON
	29-8	ABANDON
	29-4	ABANDON
	29-7	ABANDON
	29-10	ABANDON
	29-6	MONITOR
	29-3	ABANDON
	29-W	MONITOR
2	30-4	MONITOR
	30-6	ABANDON
	30-M	ABANDON
	30-7	ABANDON
	30-8	MONITOR
	30-5	ABANDON
	30-9	ABANDON
	30-E	ABANDON
	30-10	MONITOR
	31-7	MONITOR
	31-2	MONITOR
	31-6	ABANDON
	31-10	ABANDON
	31-4	ABANDON
	31-9	MONITOR
	31-3	ABANDON
	31-11	ABANDON
	31-8	ABANDON
	31-5	MONITOR
	32-7	ABANDON
	32-W	ABANDON

Sumps designated as "KEEP UNDER LINER" were cut off below finish grade, capped, and will be able to be used by the Commonwealth in the future if the need arises.

Table 02095-1
Final Sump Disposition List

Areas	Sump ID	Notes
	32-9	MONITOR
	32-4	ABANDON
	32-8	ABANDON
	32-E	MONITOR
	41	ABANDON
3	35-7	ABANDON
	35-6	MONITOR
	35-3	ABANDON
	35-5	ABANDON
	35-8	ABANDON
	35-2	MONITOR
	35-1	ABANDON
	35-4	ABANDON
	36-6	MONITOR
	36-E	ABANDON
	36-5	ABANDON
	36-7	MONITOR
	36-4	ABANDON
	36-3	MONITOR
	47-W	ABANDON
	47-E	ABANDON
	33-1	ABANDON
	33-2	ABANDON
	33-3	ABANDON
	33-4	ABANDON
	33-5	ABANDON
	33-6	ABANDON
	33-7	ABANDON
	33-8	ABANDON
	33-9	ABANDON
	33-10	ABANDON
	33-11	ABANDON
	33-12	ABANDON
	33-13	ABANDON
	33-14	ABANDON
	33-15	ABANDON
	33-16	ABANDON
	33-17	ABANDON
	33-18	ABANDON
	33-19	ABANDON
4	24-7	ABANDON
	24-6	MONITOR
	24-8	ABANDON
	24-4	ABANDON
	24-9	ABANDON
	24-3	ABANDON
	24-5	MONITOR
	25-9	MONITOR

Table 02095-1
Final Sump Disposition List

Areas	Sump ID	Notes
	25-4	ABANDON
	25-5	MONITOR
	25-8	ABANDON
	25-6	ABANDON
	25-3	ABANDON
	25-7	MONITOR
	26-2	MONITOR
	26-6	ABANDON
	26-5	ABANDON
	26-8	ABANDON
	26-3	MONITOR
	26-7	ABANDON
	26-4	MONITOR
5	16-L	ABANDON
	22-L	ABANDON
	17-L	ABANDON
	14-L	ABANDON
	13-L	ABANDON
	18-9	MONITOR
	18-E	ABANDON
	18-7	ABANDON
	18-5	ABANDON
	18-8	ABANDON
	18-6	MONITOR
	18-W	ABANDON
	20-12	ABANDON
	20-8	ABANDON
	20-W	MONITOR
	20-5	ABANDON
	20-9	MONITOR
	20-10	ABANDON
	20-7	MONITOR
	20-E	ABANDON
	20-6	ABANDON
	20-11	MONITOR
	23-9	MONITOR
	23-4	ABANDON
	23-8	ABANDON
	23-5	MONITOR
	23-6	MONITOR
	23-7	ABANDON
	34-1	ABANDON
	34-2	ABANDON
	34-3	ABANDON
	34-4	ABANDON
6	10-9	MONITOR
	10-5	ABANDON
	10-10	ABANDON

Table 02095-1
Final Sump Disposition List

Areas	Sump ID	Notes
	10-8	MONITOR
	10-4	ABANDON
	10-3	ABANDON
	10-7	MONITOR
	15-4	MONITOR
	15-5	MONITOR
	15-7	ABANDON
	15-6	MONITOR
	15-8	MONITOR
	11-5	MONITOR
	11-S/E	ABANDON
	11-7	ABANDON
	11-4	ABANDON
	11-S/W	ABANDON
	11-6	MONITOR
	19-W	ABANDON
	19-7	MONITOR
	19-5	MONITOR
	19-8	ABANDON
	19-E	ABANDON
	19-6	MONITOR
7	1-3	ABANDON
	1-1	ABANDON
	1-2	MONITOR
	5-S2	ABANDON
	5-S3	ABANDON
	8-L	ABANDON
	6-L	ABANDON
	4-L	ABANDON
	7-4	MONITOR
	7-8	ABANDON
	7-9	ABANDON
	7-3	ABANDON
	7-5	MONITOR
	7-2	ABANDON
	7-7	MONITOR
	7-6	ABANDON
	3-6	ABANDON
	1-S	ABANDON
	1-S2	ABANDON
	3-2	MONITOR
	3-3	ABANDON
	2-6	MONITOR
	2-5	ABANDON
	2-4	ABANDON
	3-7	ABANDON
	3-4	MONITOR
	3-5	ABANDON

Table 02095-1
Final Sump Disposition List

Areas	Sump ID	Notes
	12-L	ABANDON
	9-L	ABANDON
8	40-1	ABANDON
	40-11	ABANDON
	40-19	MONITOR
	40-16	ABANDON
	40-21	ABANDON
	40-14	KEEP UNDER LINER
	40-15	MONITOR
	44-19	ABANDON
	44-14	MONITOR
	44-20	MONITOR
	42-11	MONITOR
	42-19	MONITOR
	42-18	ABANDON
	43-15	ABANDON
	43-13	MONITOR
	43-12	KEEP UNDER LINER
	43-11	ABANDON
	43-10	KEEP UNDER LINER
9	40-3	ABANDON
	40-17	MONITOR
	40-20	ABANDON
	40-2	ABANDON
	40-18	ABANDON
	44-21	ABANDON
	44-10	ABANDON
	44-7	ABANDON
	44-22	MONITOR
	44-8	KEEP UNDER LINER
	44-3	KEEP UNDER LINER
	42-6	ABANDON
	42-7	KEEP UNDER LINER
	42-17	ABANDON
	42-20	MONITOR
	42-21	ABANDON
	43-9	MONITOR
	43-16	ABANDON
	43-7	MONITOR
	43-17	ABANDON
10	40-5	ABANDON
	40-6	ABANDON
	40-22	MONITOR
	44-5	MONITOR
	44-4	ABANDON
	42-5	ABANDON
	48-E	ABANDON
	48-W	ABANDON

Table 02095-1
Final Sump Disposition List

Areas	Sump ID	Notes
	49-DW	ABANDON
	52-DW	ABANDON
	52-1	ABANDON
	49-1	ABANDON
	50-DW	ABANDON
	50-1	ABANDON
	50-2	ABANDON
	50-3	ABANDON
	51	ABANDON
11	37-1	ABANDON
	37-3	MONITOR
	39-5	ABANDON
	39-3	ABANDON
	39-1	MONITOR
	38-2	ABANDON
	38-5	MONITOR
	38-3	ABANDON
	38-1	ABANDON
	SLT-4	ABANDON
	SLT-1	ABANDON
	46-1	MONITOR
	SLT-2	ABANDON
12	SLT-3	ABANDON
	46-2	MONITOR
	46-3	MONITOR
	38-4	MONITOR
	38-6	ABANDON
	45-2	ABANDON
	45-1	MONITOR
	39-4	MONITOR
	39-2	ABANDON
	37-5	ABANDON
	37-4	MONITOR
	37-2	ABANDON

SECTION 02208

SITE ROADWAYS

PART 1 - GENERAL

1.1 WORK INCLUDED

This section includes labor, equipment, material, and testing requirements for constructing an aggregate surface course on roadways and parking areas within MFDS. Roadways outside the capped area shall consist of a woven geotextile and a dense aggregate course over the soil subgrade as shown on the drawings. Roadways over the IRP Cap shall consist of a woven geotextile, a sand layer, a nonwoven geotextile, and a dense aggregate course.

1.2 SUBMITTALS

1.2.1 Woven Geotextile Fabric

The Manufacturer's literature and a sample of the woven geotextile fabric shall be submitted to IT prior to beginning roadwork.

1.2.2 Sand

A gradation analysis from the source shall be submitted to IT prior to beginning roadwork.

1.2.3 Nonwoven Geotextile Fabric

The Manufacturer's literature and a sample of the nonwoven geotextile fabric shall be submitted to IT prior to beginning roadwork.

1.2.4 Dense Graded Aggregate

An aggregate gradation analysis from the source shall be submitted to the Site Manager prior to beginning roadwork.

1.3 WEATHER LIMITATIONS

Aggregate surface courses shall not be constructed when the ambient temperature is below 32 degrees F and on subgrades that are frozen or contain frost.

PART 2 - PRODUCTS

2.1 WOVEN GEOTEXTILE FABRIC

The woven geotextile fabric shall meet the requirements in Table 02208-1.

Table 02208-1

Woven Geotextile Fabric Physical Properties

Property	Test Method	Minimum Test Value
Fabric Weight, oz/yd^2	ASTM D 5261	6
Apparent Opening Size (U.S. Sieve)	ASTM D 4751	70
Permittivity, sec^{-1}	ASTM D 4491	0.05
Puncture, lb	ASTM D 4833	120
Grab Tensile, lb	ASTM D 4632	280
Trapezoidal Tear, lb	ASTM D 4533	120
Burst Strength, psi	ASTM D 3786	625
Ultraviolet Degradation (percent strength retained at 500 hours)	ASTM D 4355	70

2.2 SAND

The sand shall be clean, washed natural sand that conforms to the gradation shown in Table 02208-2. The gradation is equivalent to the gradation of Mortar Sand as specified by Kentucky Department of Transportation (DOT).

Table 02208-2

Sand Gradation

Sieve Size	Percent Passing
2.36 mm (No. 8)	100
300 µm (No. 50)	10 – 40
150 µm (No. 100)	0 – 10

2.3 NONWOVEN GEOTEXTILE FABRIC

The nonwoven geotextile fabric shall meet the requirements in Table 02208-3.

Table 02208-3

Nonwoven Geotextile Fabric Physical Properties

Property	Test Method	Minimum Test Value
Fabric Weight, oz/yd^2	ASTM D 5261	16.0 (Minimum) 16.5 (Nominal)
Apparent Opening Size (U.S. Sieve)	ASTM D 4751	100
Permittivity, sec^{-1}	ASTM D 4491	0.5
Puncture, lb	ASTM D 4833	190
Grab Tensile, lb	ASTM D 4632	375
Trapezoidal Tear, lb	ASTM D 4533	145
Burst Strength, psi	ASTM D 3786	775
Ultraviolet Degradation (percent strength retained at 375 hours)	ASTM D 4355	70

2.4 AGGREGATE

Aggregate shall consist of clean, sound, durable particles of natural gravel, crushed gravel, crushed stone, sand, slag, soil, or other approved materials processed and blended or naturally combined. Aggregate shall be free from lumps and balls of clay, organic matter, and other foreign materials. The Contractor shall be responsible for obtaining materials that meet the specification and can be used to meet the grade requirements specified herein after all compaction and proof rolling operations have been completed.

2.4.1 Gradation Requirements

Gradation requirements specified in Table 02208-4 shall apply to all completed aggregate roadway surfaces. It shall be the responsibility of the Contractor to obtain materials that will meet the gradation requirements after mixing, placing, compacting, and other operations.

Table 02208-4

Gradation for Aggregate Surface Courses

Sieve Designation	Percent Passing
1 inch	100
3/4 inch	70-100
3/8 inch	50-80
No. 4	30-65
No. 30	10-40
No. 200	4-13

PART 3 - EXECUTION

3.1 PREPARATION OF UNDERLYING COURSE SUBGRADE

Two types of areas shall have dense-graded aggregate placed on top of them for use as roadways or parking areas. Areas outside the IRP Cap will require crushed aggregate and a layer of woven geotextile to be placed on top of the soil subgrade. Areas within the IRP Cap will require placing a layer of woven geotextile, sand, and nonwoven geotextile over the geomembrane, prior to placing any aggregate.

3.1.1 Outside IRP Cap

At the time of surface course construction, the underlying subgrade shall contain no frozen material. Ruts or soft yielding spots in the underlying subgrade areas having inadequate compaction and deviations of the surface from the requirements set forth herein shall be corrected by loosening and removing soft or unsatisfactory material and by adding approved material, reshaping to line and grade. The completed underlying subgrade shall not be disturbed by traffic or other operations and shall be maintained by the Contractor in a satisfactory condition until the surface course is placed. The subgrade shall be compacted with an approved 10-ton vibratory compactor for a minimum of 4 passes. After compaction, a layer of nonwoven geotextile shall be placed on top of soil and the dense graded shall be placed on top of nonwoven geotextile.

3.1.2 Within IRP Cap

In areas covered by the IRP Cap, a nonwoven geotextile fabric shall be placed over the geomembrane liner. An 8-inch layer of sand shall be placed over the nonwoven geotextile. The sand shall be enveloped within a woven geotextile fabric prior to placing the dense aggregate.

The woven and nonwoven geotextile fabrics shall be placed in a neat and orderly manner so that wrinkles are eliminated. The woven geotextile shall be wrapped in a fashion to contain the sand layer as shown on the drawings.

3.2 LAYER THICKNESS

3.2.1 Sand

The sand shall be placed in an approximately 8-inch thick uniform layer.

3.2.2 Dense Graded Aggregate

The aggregate material shall be placed in layers of uniform thickness. When a compacted layer of 6 inches or less is required, the material may be placed in a single layer; when a compacted thickness of more than 6 inches is required, no layer shall exceed 6 inches nor be less than 3 inches when compacted.

The completed thickness of the base course shall not be less than 1 inch the thickness indicated. The thickness of the base course shall be measured at intervals chosen the field Engineer providing at least one measurement for at least each 200 square yards of base course. The depth measurements shall be made by test holes at least 3 inches in diameter. Where the measured thickness of the base course is more than 1 inch deficient, such areas shall be corrected by scarifying to a depth of at least 3 inches before adding new material to bring to grade. All replaced material shall be compacted. Where the measured thickness of the base course is greater than indicated, it will be considered as conforming with the requirements provided the surface of the base course is within 1 inch of established grade. The average thickness shall be the average of the measurements as specified above but within 1 inch of the thickness indicated.

3.3 COMPACTION

3.3.1 Soil Subgrade

The soil subgrade shall be compacted as specified in Section 02300, Earthwork. Each layer of the aggregate surface course shall be compacted with compaction equipment. In locations not accessible to the rollers, the mixture shall be compacted with mechanical tampers. Any materials that are found to be unsatisfactory shall be removed and replaced with satisfactory material or reworked to produce a satisfactory material.

3.3.2 IRP Cap

Dynamic compaction shall not be performed over the IRP Cap area. The sand and aggregate layers shall be compacted. The stone shall be compacted by a minimum of 2 to 4 passes with the smooth drum roller. The number of passes shall be documented in the daily logs. Compaction testing for sand and aggregate shall not be performed within the Restricted Area.

3.3.3 Dense Graded Aggregate

Each layer of base course shall be compacted to produce an average field-measured density, through the full depth of the percent of maximum dry density as specified in Table 02208-5. In all places not accessible to the rollers, the base course material shall be compacted with mechanical tampers. The base course shall also be 2 percentage points of the optimum moisture content. Adjustments in rolling and finishing procedures shall be made as may be directed to obtain grades, to minimize segregation and degradation of base course material, to adjust the water content, and to ensure an acceptable base course. Material found unacceptable shall be removed and replaced, as directed, with acceptable material.

Table 02208-5

Dense-Graded Aggregate Testing Schedule
(Perimeter Roads)

Material	Testing Standard	Test	Frequency	Fail/Acceptance Criteria
Aggregate base	ASTM D 698	Density-moisture	1 per source of aggregate	N/A
Compacted aggregate base	ASTM D 2922 ASTM D 3017	Soil density and water content by nuclear methods	1 per 1,000 yd^2 per lift	95% of maximum Standard Proctor density
Compacted aggregate base	Test holes min. of 3" diameter	Thickness (t)	1 per 200 square yards of roadway	Specified thickness minus "$\geq t \leq$" of grade

3.4 CORRECTIVE ACTION

If an area does not conform with the specifications and the area needs to be repaired, the Contractor shall define the extent of the area requiring repair. The failed area limits shall be defined by conducting additional testing in a radial pattern from each failed test until the results fall within the specifications. If the Contractor chooses not to request additional tests, the Contractor shall repair the area that extends from the failing test out to the boundaries defined by the last passing test.

3.5 FIELD COMPACTION REPORTS

The soil technician shall submit formal reports of all inspection, compaction tests and retests. The reports shall be furnished to IT and the Contractor as soon as possible upon completion of the required tests. This report information shall include, but not be limited to, the following:

1. Document the type and quantity of earthwork equipment.
2. Observed coverage and number of passes made by compaction equipment.
3. Inspect and document lift thickness with comments about additional material being placed, if required.

4. Visual inspect to detect the presence of organic matter or irreducible matter.
5. Date of the test and date submitted.
6. Location of test.
7. Wet weight, moisture content, and dry weight of field sample.
8. Description of material.
9. Ratio of field dry density to maximum lab dry density expressed as a percent.
10. Comments concerning the field density passing or failing the specified compaction.
11. Comments about recompaction, if required.

- End of Section -

SECTION 02230

HDPE PIPING

PART 1 - GENERAL

1.1 SCOPE

This section specifies requirements for construction of the high-density polyethylene (HDPE) piping per Design Drawings.

1.2 SUBMITTALS

The following shall be submitted in accordance with the Remedial Action Work Plan for Remaining Work, Section 01305, Submittals.

1.2.1 Perimeter Drainage Pipe

Material descriptions and recommended installation instructions from the pipe manufacturers shall be submitted for approval prior to shipment of materials to the site.

PART 2 - PRODUCTS

2.1 PIPE, FITTINGS, AND JOINTS

The perimeter drainage piping shall be corrugated HDPE product. The pipe shall conform to ASTM D 3350 with minimum cell classification values of 324420C. HDPE piping shall have an ID of 4 inches and a minimum parallel plate stiffness value of 50 psi when tested in accordance with ASTM D 2412. The pipe shall have a minimum wall thickness of 0.020 inches with smooth interior walls. All perforation patterns and perforations per unit area shall meet Class 2 requirements of AASHTO M294 latest edition. Slotted perforations will be required. The fittings supplied shall be made from polyethylene resin which meets this same specification.

PART 3 - EXECUTION

3.1 DELIVERY, STORAGE AND HANDLING

Pipe shall be stored on clean, level, dry ground to prevent undue scratching or gouging of the pipe. If the pipe must be stacked for storage, such stacking should be done in accordance with the pipe manufacturer's recommendations. The handling of the pipe should be done in such a manner that it is not damaged by dragging over sharp objects or cut by chokers or lifting equipment.

Segments of pipe having cuts or gouges in excess of 20 percent of the wall thickness of the pipe shall be cut out and removed. The undamaged portion of pipe can be rejoined after a new end piece has been welded to the pipe.

Fused segments of pipe shall be handled so as to avoid damage to the pipe. Limit bending of the pipe. Nylon slings are preferred.

3.2 PIPE INSTALLATION

The HDPE piping shall be constructed to the lines and grades shown on the design drawings. The pipe shall be joined by fittings. The fittings shall not reduce or impair the overall integrity or function of the pipeline. Fittings may be either molded or fabricated. The fittings may be installed by various methods, such as snap on, screw on, bell and spigot, and wrap around. Couplings shall provide sufficient longitudinal strength to preserve pipe alignment and prevent separation at the joints. Perforated pipe shall be encased with a gravel material as specified in Section 2.1.

- End of Section -

SECTION 02231

CLEARING AND GRUBBING

PART 1 - GENERAL

1.1 WORK INCLUDED

This specification covers the work required to remove vegetation including trees, stumps, roots, and ground cover from the designated areas. The designated areas may include but are not limited to any borrow areas, the East Detention Basin, the Perimeter Channels, the East Main Drainage Channel, and the Perimeter Road.

1.2 DEFINITIONS

1.2.1 Clearing

Clearing shall consist of the felling, trimming, and cutting of trees into sections and the satisfactory disposal of the trees and other vegetation designated for removal, including down timber, snags, brush, and rubbish occurring in the areas to be cleared.

1.2.2 Grubbing

Grubbing shall consist of the removal and disposal of stumps, roots larger than 3 inches in diameter, and matted roots from the designated grubbing areas.

PART 2 - PRODUCTS

(Not Applicable)

PART 3 - EXECUTION

3.1 CLEARING

Trees, stumps, roots, brush, and other vegetation in areas to be cleared shall be cut off flush with or below the original ground surface, except such trees and vegetation as may be indicated or directed to be left standing. Trees designated to be left standing within the cleared areas shall be trimmed of dead branches 1½ inches or more in diameter and shall be trimmed of all branches to the heights indicated or directed. Limbs and branches to be trimmed shall be neatly cut close to the base of the tree or main branches. Cuts more than 1½ inches in diameter shall be painted with an approved tree-wound paint. Trees and vegetation to be left standing shall be protected from damage incident to clearing, grubbing, and construction operations by the erection of barriers or by such other means as the circumstances require. Clearing shall also include the removal and disposal of vegetation that obtrudes, encroaches upon or otherwise obstructs the work. Within the East Main Drainage Channel, fallen timber shall be removed and stumps will not be grubbed.

3.2 GRUBBING

Material to be grubbed, together with logs and other organic or metallic debris not suitable for foundation purposes, shall be removed to a depth of not less than 18 inches below the original surface level of the ground in areas indicated to be grubbed and in areas indicated as construction areas under this contract. Depressions made by grubbing shall be filled with suitable material and compacted to make the surface conform with the original adjacent surface of the ground.

3.3 TREE REMOVAL

As directed by the Field Engineer, trees and stumps shall be removed from areas outside those areas designated for clearing and grubbing. This work shall include the felling of such trees and the removal of their stumps and roots as specified in Paragraph 3.2, Grubbing. Trees shall be disposed of as specified in Paragraph 3.4, Disposal of Materials.

3.4 DISPOSAL OF MATERIALS

Brush and other refuse from the clearing and grubbing operations shall be disposed chipping and disposed on site in an area designated for waste disposal, unless otherwise directed in writing. Stumps larger than 8 inches in diameter shall be grinded with a stump grinder. Stumps less than 8 inches in diameter shall be pushed out with a dozer and chipped. Logs larger than 8 inches in diameter shall be stockpiled indefinitely outside of the RW construction area in an area approved by the Engineer. Such directive will state the conditions covering the disposal of such products and will also state the areas in which they may be placed.

- End of Section -

SECTION 02270

GEOMEMBRANE

PART 1 - GENERAL

1.1 WORK INCLUDED

Furnish labor, materials, tools, supervision, transportation, and installation equipment necessary for the manufacture, storage, delivery, installation, and testing of geomembrane liners. The geomembrane liner will be the final cover layer of the Interim Cap and beneath the soil subgrade at the area southeast of the Restricted Area.

1.2 DEFINITIONS

Film Tearing Bond (FTB) - A failure in the ductile mode of one of the bonded sheets by tearing prior to complete separation to the bonded area.

1.3 SUBMITTALS

1.3.1 Manufacturers Literature

Manufacturer's certified raw and sheet material data sheets along with a copy of quality control certificates. A copy of the Manufacturing and Fabricator's quality control manuals and the Installer's quality control manual shall also be submitted.

1.3.2 Samples

Sample of each type of liner material and seam.

1.3.3 Layout and Detail Drawings

Geomembrane panel layout and penetration detail drawings must be submitted a minimum of 15 days prior to delivery of geomembrane to the site. The shop drawing shall show liner sheet layouts with proposed size, number, and position of all factory-fabricated sheets and the location of field seams. The shop drawings will also show complete details of field seams, seals at structures, and other pertinent information in regard to installation of the liner. The method for preventing uplift by wind during construction shall also be included in the submittal.

1.3.4 As-Built Drawings

Final as-built drawings of geomembrane installation showing panel/sheet numbers, seam numbers, and location of repairs, destructive seam samples, and penetrations.

1.3.5 Qualifications

Manufacturer's, fabricator's, installer's, inspector's, and independent laboratory's qualification statements including resumes of key personnel involved in the project.

1.3.6 Destructive Factory Seam Testing

Certified test results on factory seams prior to delivery of any panels to the site.

1.3.7 Surface Preparation

Certification from the installer of the acceptability of the surface on which the geomembrane is to be placed immediately prior to geomembrane placement.

1.3.8 Tests, Inspections, and Verifications

Manufacturer's and fabricator's certified quality control test results.

1.3.9 Field Seaming

Installer's certified quality control test results on all field seams (destructive and nondestructive).

1.3.10 Warranty

Manufacturer's and installer's written warranty that guarantees the life expectancy and installation of the material for a minimum of 20 years during which time the liner materials and workmanship specifically provided or performed under this project shall be free from any significant defects. This guarantee shall provide for the total and complete repair or replacement of the defect or defective area of lining materials upon written notification and demonstration by the Field Engineer of the specific nonconformance of the lining material or installation with the project specifications.

1.4 EQUIPMENT

Equipment used in performance of the work shall be in accordance with the geomembrane manufacturer's recommendations and shall be maintained in satisfactory working condition.

PART 2 - PRODUCTS

2.1 MATERIALS

2.1.1 Geomembrane Material Characteristics

Reinforced polypropylene and High Density Polyethylene liners shall be meet the properties in Tables 02270-1 and 02270-2, respectively. Reinforced polypropylene material or an equal approved by the Engineering Manager shall be used on the Cap in exposed locations. HDPE or an equal approved by the Engineering Manager shall be used in buried applications (i.e., southeast of the Restricted Area).

2.1.2 Reinforced Polypropylene Liner Fabrication

The compounding ingredients used in producing membrane liners shall be first quality, virgin material meeting specific public health and safety requirements as well as providing durable and effective formulations for liner applications. The manufacturer shall have a manufacturing quality management program based on the manufacturing method used and the type of membrane being produced.

Table 02270-1

Reinforced Polypropylene Physical Properties

Property	Test Method	Typical Value (unless noted)
Thickness (MILS, AVG) 1. Overall 2. Over Scrim	ASTM D-751	 41.0 11.0
Breaking Strength-Fabric lbs, minimum	ASTM D-751	220
Tear Strength lbs, minimum	ASTM D-751 Tongue tear	70
Low Temperature °F	ASTM D-2136 ⅛" Mandrel	-40
Dimensional Stability Percent Change, Maximum	ASTM D-1204 100 deg. C, 1-hr.	+/-1.0
Puncture Resistance Minimum, lbs	FTM 101B, Method 2031	225
Water Absorption Percent Change, Maximum	ASTM D-471	<1.0
Ply Adhesion Minimum, lbs/in.	ASTM D-413	20

Property	Test Method	Typical Value (unless noted)
UV Resistance hrs	ASTM G-26 Xenon Arc at 80°F	12,000

Panels shall be assembled according to the manufacturer's field layout. Any changes shall be approved by the manufacturer and Engineering Manager.

Factory panel seams shall be destructively tested and 100 percent visually inspected for compliance in accordance with the factory seam requirements listed in Part 4 - Quality Control.

2.1.3 HDPE Fabrication

Resin used in manufacturing geomembranes shall be made of virgin uncontaminated ingredients. Polyethylene geomembrane resigns for HDPE resins shall have a specific gravity of greater than or equal to 0.94. Carbon black used in polyethylene geomembranes shall be 2.0 to 3.0 percent by weight in accordance with ASTM D 1603. Materials with previous service life which are recycled will not be allowed. Resins shall not contain fatty acid residues, epoxy, or secondary plasticizers.

Geomembranes sheets and factory seams shall conform to the physical requirements listed in Table 02270-2. Test values shown in the aforementioned tables, except when specified as minimum or maximum, are average lot property values.

Table 02270-2

HDPE Geomembrane Physical Properties

Property	Test Method	Test Value
Thickness, mil, (nominal)	ASTM D 5199	60
Thickness, mil, (Lowest Individual Reading) (Note 1)	ASTM D 5199	54
Tensile Strength at Yield, lb/in Type IV Specimen (MARV[2])	ASTM D 638	126
Tensile Strength at Break, lb/in Type IV Specimen (MARV)	ASTM D 638	228
Elongation at Yield, percent (MARV)	ASTM D 638	12
Elongation at Break, Percent Min, Avg, (5 cm GL)	ASTM D 638	700
Tear Resistance, lb (MARV)	ASTM D 1044 Die C	42
Puncture Resistance, lb (MARV)	ASTM D 4833	108

Property	Test Method	Test Value
Low Temperature Brittleness, °C	ASTM D 746	-68
Notched Constant Tensile Load, (HR)	ASTM D 5397	200
Std Oxidative Induction Time, (minutes) (MARV)	ASTM D 3895	100

[1]@ 30% of Min Yield Stress
[2]MARV - Minimum Average Roll Value

PART 3 - EXECUTION

3.1 PACKAGING, DELIVERY, STORAGE, AND HANDLING

3.1.1 Shipping

Ship in rolls: The inspector should confirm that the geomembrane has been protected with some type of covering material; often a thick sheet of the same material as the membrane is used. The manufacturer shall be liable for all damages to the materials incurred prior to and during transportation to the site.

Each panel should be marked to show the following minimum information:

- Name of manufacturer/fabricator
- Product type
- Physical dimensions (length and width)
- Panel number of placement according to the design layout pattern
- Direction for unrolling or unfolding the membrane.

3.1.2 Handling

When the geomembrane liner is delivered to the construction site, it shall be inspected to confirm that it is the specified material (visually compare to samples) and that it is not damaged. Inspection activities shall ensure, with a reasonable degree of certainty, that the completed facility meets or exceeds design criteria, plans, and Specifications by preventing, detecting, and correcting the following:

- Puncture from nails or splinters
- Tears from operation of equipment or inadequate packaging
- Exposure to temperature extremes resulting in unusable material
- Blocking: the bonding together of adjacent membrane layers, which may be caused by excessive heat

- Crumpling or tearing from inadequate packaging support.

The Field Engineer will carefully examine the material (visually compare to samples) underlying any damaged crate or roll cover. If damage is found, the Field Engineer shall carefully examine the entire shipment for damage. The Manufacturer shall replace any damaged material at no cost to the Owner.

Storage: On-site storage of the geomembrane liner shall be in a secure area. Storage shall be as brief as possible.

3.2 PREWORK

Base material shall be free from roots, grass, vegetation and other debris which could damage the geomembrane. No protrusions or stones larger than 1 inch shall be present in the final layer. Foreign materials and protrusions shall be removed, and cracks and voids shall be filled and the surface made level, or uniformly sloping as indicated on the drawings. The prepared surface shall be free from loose earth, rocks, rubble, and other foreign matter.

Subgrade checklists shall be completed in accordance with Part 4 – Quality Control.

3.2.1 Anchor/Drainage Trenches

Only the amount of perimeter drain trench required for the geomembrane to be anchored in 1 day shall be excavated. Trench corners shall be slightly rounded to avoid sharp bends in the geomembrane.

3.3 INSTALLATION

Only geomembrane that can be anchored and seamed together the same day shall be deployed. Adequate ballast (e.g., sand bags) shall be placed on the geomembrane, without damaging the geomembrane, to prevent uplift by wind. Only small rubber tired equipment, with maximum tire inflation pressures of 5 pounds per square inch, shall be allowed directly on the geomembrane. The method used to deploy the geomembrane shall not scratch, crimp or excessively elongate the geomembrane as determined by the Field Engineer. Seams shall be oriented parallel to the line of maximum slope.

The method used to deploy the geomembrane shall minimize wrinkles. The geomembrane manufacturer and installer shall coordinate efforts to provide sufficient slack in the deployed geomembrane for the coldest temperature anticipated, to prevent tensile stresses in the geomembrane and its seams during installation and after the geomembrane is covered. The geomembrane shall have adequate slack to prevent uplift from the subgrade or substrate material at any location.

The factory fabricated panels shall be overlapped a minimum of 6 inches and fused by the hot wedge welding method. Extrusion welding with a minimum of a 3-inch overlap shall only be utilized at locations where the hot wedge welding method is not practical, such as seaming patches, in poorly accessible areas such as sump bottoms, and seaming around pipe penetrations.

Wherever possible, seaming shall be conducted in the slope direction, not across the slope. The seam shall be clean and free of moisture, dirt, foreign material, and aligned to prevent fish mouths and wrinkles.

The welding equipment used shall be capable of continuously monitoring and controlling the temperature of the zone of contact where the machine is actually fusing the lining material so as to ensure that changes in environmental conditions will not affect the integrity of the weld. All welding material shall be of a type recommended and supplied by the manufacturer and shall be delivered in the original sealed containers; each with an indelible label bearing the brand name, manufacturer's mark number, and complete directions as to proper storage.

Liner placement shall stop at an ambient temperature below 41°F or above 95°F unless weather and seaming conditions are specified as follows: (a) no weld shall be done below 34°F; (b) between 34°F and 40°F, seaming is possible if the liner is preheated be either sun or hot air device, and if there is not excessive cooling resulting from wind as determined by the Field Engineer; and (c) above 40°F no preheating is required. In all cases, the liner shall be dry.

Repairs to the Liner: Any necessary repair to the liner shall be patched with the liner material itself. Use a patch with rounded corners, large enough to extend 6 inches in all directions from the puncture. The patch shall be prepared and the patch seamed and tested in accordance with these Specifications.

The Subcontractor shall furnish a sufficient number of temporary anchors to prevent damage to the liner due to wind or other forces. The liner shall be secured at all times to hold it down during high winds.

The completed installation shall be cleaned of all debris, construction material, etc. by the Subcontractor.

PART 4 - QUALITY CONTROL

4.1 SHIPPING, STORAGE, AND HANDLING OF LINER MATERIAL

The liner material shall be kept dry and out of direct sunlight until installation. The Subcontractor must certify that the material delivered to the site is uncured (not vulcanized) and has been stored away from dampness and sunlight. The new geomembrane liner must be shielded from ultraviolet light and dampness to maintain seamability. Shipping, storage, and handling of liner material shall be according to manufacturer's recommendations.

4.2 TESTING

Unless otherwise specified, laboratory and field-testing (destructive and nondestructive) may be performed by the liner Subcontractor with oversight by the Field Engineer. Field-testing may be performed on site by the installer's Quality Control (QC) Inspector.

4.3 SUBGRADE

The Subgrade Checklist, Attachment 02270-1, shall be completed by the installer's QC Inspector and the Acceptance Certificate, Attachment 02270-2, shall be signed by the installer's QC Inspector and the membrane installer.

4.4 INSPECTION

Inspection activities to be conducted by the Subcontractor under oversight of the Field Engineer during liner placement include:

- Checking delivery tickets and geomembrane manufacturers' quality control reports to verify that the geomembrane rolls received on site meet the project specifications. In addition, the Subcontractor shall provide to the Field Engineer the identifying labels from each roll. Further, the position of each roll of material shall be noted on an as-built drawing.

- Observations of the weather conditions (i.e., temperature, humidity, precipitation, and wind) to ensure that they are acceptable for membrane placement and seaming.

- Observations and measurements of the anchor trench to ensure that the lines and width are as specified in design drawings. If the trench is excavated in soil that is susceptible to desiccation, only that trench length that is required for one days work shall be excavated. Trench corners shall be rounded to prevent stressing the membrane. Backfilling of the trench shall be performed as soon as possible and compacted so as not to damage the geomembrane liner.

- Observations and tests to confirm that all designed liner penetrations and liner connections are installed as specified. Liner penetrations should be verified for appropriate clamp and caulking use, for appropriate material, for good seaming, and for good housekeeping practices. No sharp bends on foundations shall be allowed.

- Measurements to confirm that required overlaps of adjacent membrane sheets were achieved, that proper temporary anchorage was used (e.g., sand bags or tires), that specified temporary and final seaming materials/techniques were used, and that the liner was placed in a relaxed (nonstressed) state.

As each geomembrane panel is placed, it shall be visually inspected for tears, punctures, and thin spots. The inspector should also inspect any factory seams to ensure that they are adequate. Any defects shall be marked on the geomembrane for repair by the Subcontractor.

If the weather becomes unacceptable for installation of the liner, the Subcontractor shall stop the membrane installation until conditions again become favorable, thus minimizing the potential for unacceptable installation.

The Subcontractor is responsible for preventing, detecting, and correcting the following:

- Liner damage from adverse weather conditions, inadequate temporary anchoring, or rough handling.
- Improper liner placement (if the placement plan is not followed) and, as a result, inadequate coverage with the available materials or an excess number of field seams by the Contractor.
- Inadequate sheet overlap.
- Nonwelded or nonseamed sections.
- Inadequate seam strength.
- Seam gaps or weak spots resulting from the presence of dirt or dust.
- Less-than-specified seam strength resulting from the use of unspecified materials, improperly operating equipment, insufficient pressure, ambient temperature extremes, or insufficient dwell time.
- Liner damage caused by cleaning solvents and seaming equipment or damage resulting from walking on the membrane while wearing improper footwear.

4.5 TESTING OF LINER

The Subcontractor shall provide the necessary personnel and equipment to perform the following:

4.5.1 The quality control certificates for the raw materials, manufactured liner rolls, and compliance to applicable ASTM requirements shall be provided by the liner manufacturer prior to installation. The manufacturer shall certify that all rolls of geomembrane supplied for the project meets the product specifications. The certification form, Attachment 02270-3, shall be completed and submitted by the geomembrane manufacturer. The Field Engineer shall review the test results for completeness and for compliance.

4.5.2 Factory seams shall be inspected and tested in accordance with Table 02270-3. The results of the factory seam testing shall be reviewed by the Field Engineer before the material is shipped to the job site. The Inspection Report, Attachment 02270-4, shall be completed and submitted by the manufacturer for each panel.

4.5.3 Trial seams shall be made at the beginning of each seaming period; which occurs at start of shift, midday, and anytime seaming equipment is turned off and allowed to cool down. Trial seams shall be made under the same conditions as actual field seams, with the same overlap. The trial seam sample shall be approximately 3 feet long by 1 foot wide (after seaming) with the seam centered lengthwise. Three adjoining specimens shall be cut from the trial seam sample. The specimens shall be tested in shear and peel using a field tensiometer, and meet the requirements

of Table 02270-3. If any of the specimens fail, the entire operation shall be repeated. If the additional specimen fails, the seaming apparatus and seamer shall not be accepted and shall not be used for seaming until the deficiencies are corrected and two consecutive successful full trial welds are achieved.

4.5.4 Field seams shall be tested to ensure that a homogeneous bond was formed. Nondestructive tests shall be performed on 100 percent of the field seams. Failed seams shall be recorded as to location and seaming crew. The data shall be reviewed for possible patterns. Repairs shall be made in accordance with approved techniques and retested to verify their integrity. Any doubtful areas shall be tested with a vacuum seam tester, a destructive sample taken, and/or any other means as directed by the Field Engineer.

4.5.4.1 Field seams installed with an extrusion welder shall be tested using the vacuum box testing method. Apply an ample amount of a solution of strong liquid detergent and water to the area to be tested. A translucent vacuum box shall be placed over the test area with sufficient downward pressure to "seal" the sponge seal strip against the liner. Apply a minimum of 3-psi vacuum to the area as indicated by the gauge on the vacuum box. If no bubbles appear after 15 seconds, close the vacuum valve and open the bleed valve, move the box over the next adjoining area with minimum 3 inches overlap and repeat the process. All areas where soap bubbles occur shall be marked and repaired and then retested.

4.5.4.2 Field seams, installed with dual track hot wedge welding, shall be air pressure tested by the following procedure. Seal both ends of the seam and insert a hollow needle into the seam to be tested. Air shall then be pumped into the annulus of the seam to a pressure between 25 and 30 psi for HDPE geomembranes and 8 to 14 psi for polypropylene geomembranes. The gauge on the air pump shall then be monitored for a minimum of 5 minutes to ensure that air does not escape from the seam. If the air pressure does not stabilize, continue the air-pressure test until the extent of the bad weld has been located. The liner shall then be patched and repaired accordingly by extrusion welds. The seam shall then be retested.

4.5.5 One field seam sample per 1,000 feet of field seams shall be prepared on site and retested by the testing laboratory for shear strength, and a peel adhesion in accordance with Table 02270-3. One companion field sample shall be taken at the same time the field seam sample is being taken at a location directed by the Field Engineer. The companion sample will be retained for onsite testing. The archive sample shall remain uncut for the liner material. The minimum acceptable value for the shear strength test and peel adhesion test is shown in Table 02270-3. Field samples shall be forwarded to the laboratory once a week. Each sample shall be numbered and cross-referenced to a field log.

If a seam test fails, the archive test specimen shall be cut from the liner material and tested. If the retest fails to achieve adequate strength, the Contractor shall be notified and a suitable remedy shall be determined.

4.5.6 Attachment 02270-5 or an Engineering Manager approved equivalent shall be completed by the Quality Assurance (QA) Inspector for each panel.

- End of Section -

Table 02270-3

Geomembrane Testing Schedule

Material	Test	Frequency	Reinforced Polypropylene Testing Standard	Reinforced Polypropylene Requirements	HDPE Testing Standard	HDPE Requirements
Geomembrane seams	Visual inspection	100% of seams	N/A	No visual liner or seam defects	N/A	No visual liner or seam defects
Factory seam	Shear strength[a]	1 per field panel	ASTM D 751	200 lb per width	ASTM D 638 Type IV	126 lb/in
Factory seam	Peel adhesion	1 per field panel	ASTM D 413	20 lb per inch of width	ASTM D 1004	42 lb
Trial seams	Bonded seam strength, peel adhesion	Beginning of each seaming period, midday, and anytime equipment is allowed to cool down	Field tensiometer	FTB	Field Tensiometer	FTB
Field seams	Vacuum box or air pressure (see Specification)	100% of field weld	See Section 4.5	No leaks or loss of air pressure	GRI Test Method "GM6"	No leaks or less of air pressure
Field seams	Peel adhesion	1 per panel and 1 per 1,000 linear feet of field weld	ASTM D 413	20 lb per inch of width	ASTM D 1004	42 lbs
Field seams	Shear strength[a]	1 per panel and 1 per 1,000 linear feet of field weld	ASTM D 751	200 lb per width	ASTM D 638 Type IV	126 lb/in

[a]Tensile strength at yield for HDPE liner.

ATTACHMENT 02270-1
Subgrade Checklist

Date

Project

Location

	Acceptable	Not Acceptable	Comments
Rodents			
Soil Type			
Soil Moisture			
Uniformity			
Grading			
Rocks			
Roots			
Vegetation			
Rubble			
Protrusions			
Rolled w/Steel Drum			

QA Inspector

Date

ATTACHMENT 02270-3
Manufacturer's Certification

Date:

Project:

Location:

The rolls of _____ membrane listed below were supplied to _____ for use in the subject project; _____. All rolls supplied meet our minimum published specifications for this project and the project specifications. All raw materials are original, first quality.

Signed:

Roll Numbers:

ATTACHMENT 02270-4
Factory Seam Inspection Report

Panel No.:

Panel Size:

SL Roll Number:

Seam No.	Seamer	Temperature Humidity	Visible Bead	Loose Flaps	Seam Width	OK
1.						
2.						
3.						
4.						
5.						
6.						
7.						
8.						
9.						

_____
Manufacturer

ATTACHMENT 02270-5
GL Installation Inspection

Date:

Project:

Location:

Weather:

	Acceptable	Not Acceptable	Comments
Panel markings			
Shipping protection			
Panel placement			
Panel fit			
Field seam samples (lab results) • Bonded seam strength • Peel adhesion			
Air pressure test • Pressure • Length • Results			
Vacuum Box			
Penetrations • Location • Vacuum box			
Anchors • Location • Depth • Compaction • Liner properly placed			
Repairs			
Panel installed per approved layout plan			

SECTION 02271

RIPRAP

PART 1 - GENERAL

1.1 SCOPE

This work includes the requirements for furnishing and placement of riprap.

1.2 DEFINITION OF TERMS

1.2.1 Machine Placed Riprap

Material dumped and placed by the use of appropriate power equipment in a manner that will produce a surface uniform in appearance. Handwork may be required to correct irregularities.

1.2.2 Hand Placed Riprap

Riprap constructed upon the prepared foundation by hand placing, so that the stones shall be as close together as practical in order to reduce voids to a minimum. The main stones shall be thoroughly "chinked" and filled with smaller stones by throwing them over the surface in any manner that is practical for the smaller stones to fill the voids.

PART 2 - PRODUCTS

2.1 MATERIALS

2.1.1 Riprap

No less than 80 percent, by volume, of riprap shall vary in size from 0.25 to 1.50 cubic feet. Stones of smaller sizes are permissible for use in filling voids in the upper surface and dressing to the proper slope. Acceptance of the size and gradation of the material will be based on visual inspection by Field Engineer. Material not meeting the specified size and gradation may be used when Field Engineer determines that it is acceptable for the intended use.

Riprap shall be durable natural limestone. Riprap shall have a maximum loss of 12 percent with sodium sulfate when subjected to 5 cycles in accordance with Kentucky/DOT KM 64-610. The soundness test shall be performed on the particles passing the 63-mm sieve and retained on the 4.75-mm sieve.

PART 3 - EXECUTION

3.1 PREPARATION

Immediately prior to the construction of riprap, trim the slopes or ground surface within reasonably close conformity to the lines and grades indicated on the Design Drawings.

3.2 INSTALLATION

- Place riprap-using machinery such as a backhoe bucket, trackhoe bucket, or a loader bucket.
- Place riprap carefully to avoid puncturing or displacing geotextile.
- Minimize height of drop of riprap onto slope.
- Thoroughly fill open voids with spalls and smaller stones to produce a dense mixture.

- End of Section -

SECTION 02275

GEOTEXTILE AND GEOCOMPOSITE DRAINAGE NET

PART 1 - GENERAL

1.1 SCOPE

This section describes the labor, materials, and installation equipment necessary for the installation of geotextile and composite drainage net. The composite drainage net and geotextile shall be installed per the Design Drawings.

1.2 SUBMITTALS

1.2.1 Manufacturer□s Literature

Material descriptions and recommended installation instructions from the geotextile and composite drainage net manufacturers shall be submitted for approval prior to shipment of materials to the site. Note: Single composite drainage net and double composite drainage net shall be used where applicable on Design Drawings.

1.2.2 Samples

Samples of the geotextile and composite drainage net shall be submitted for approval prior to shipment of materials to the site.

PART 2 - PRODUCTS

2.1 GEOTEXTILE

The geotextile shall be a nonwoven pervious sheet of polymeric material and shall consist of long-chain synthetic polymers composed of at least 85 percent by weight polypropylene, polyolefins, polyesters, or polyamides. Stabilizers and/or inhibitors shall be added to the base polymer, if necessary, to make the filaments resistant to deterioration by ultraviolet light, oxidation, and heat exposure. Regrind material which consists of edge trimming and other scraps that have never reached the consumer may be used to produce the geotextile. Geotextile shall be formed into a network such that the filaments or yarns retain dimensional stability relative to each other, including the selvages. The geotextile physical properties shall equal or exceed the minimum average roll values listed in Table 02275-1 and be free of defects including tears, nodules or other manufacturing defects which may affect service ability. Acceptance of geotextile shall be in accordance with ASTM D 4759. Strength values shown are for the weaker principal direction.

Table 02275-1

Geotextile Physical Properties

Property Test	Method Test	MARV[1]	MARV[1]	MARV
Fabric Weight, oz/yd^2	ASTM D 3776	3	6	7
Apparent Opening Size (U.S. Sieve)	ASTM D 4751	70	70	70
Permittivity, sec^{-1}	ASTM D 4491	2.0	1.0	1.0
Puncture, lb	ASTM D 4833	50	85	90
Grab Tensile, lb	ASTM D 4833	80	160	200
Trapezoidal Tear, lb	ASTM D 4632	30	55	70
Grab Elongation, Percent	ASTM D 4632	50	50	50
Burst Strength, psi	ASTM D 3786	150	280	350
Ultraviolet Degradation (percent strength retained at 500 hours)	ASTM D 4355	70	70	70

MARV[1] - Minimum Average Roll Value in the weaker principal direction, except for apparent opening size. Apparent opening size is maximum average roll value.

2.2 GEOCOMPOSITE DRAINAGE NET

The polymer used to manufacture the drainage net shall be nonthermally degraded polyethylene which is clean and free of any foreign contaminants. Regrind material which consists of edge trimmings and other scraps that have never reached the consumer may be used to manufacture the drainage net; however, post-consumer recycled materials shall not be used. The manufactured drainage net shall conform to the property requirements listed in Table 02275-2 and shall be free of defects including tears, nodules, or other manufacturing defects which may affect its serviceability.

Table 02275-2

Drainage Net Properties

Property	Test Method	Minimum Value
Minimum Polymer Density, g/cm^3	ASTM D 1505	0.94
Minimum Thickness, in	ASTM D 1777	0.22 $\pm$ 0.022
Maximum Polymer Melt Index, g/10 min	ASTM D 4833	1.1
Carbon Black Content, percent	ASTM D 4218	2-3

Property	Test Method	Minimum Value
Minimum Tensile Strength, psi	ASTM D 5035	42
Minimum Transmissivity, m^2/sec	ASTM D 4716	1×10^{-4}
Minimum Crush Resistance, psi	ASTM D 1621	35

Note: Transmissivity shall be measured using tap water at 68°F with a gradient of 0.03 under a normal pressure of 3.5 psf. This is the transmissivity of the core net only.

2.2.1 Geotextile

For the double composite, the drainage net shall be covered on both sides with a geotextile and for the single composite; the drainage net shall be covered on one side with a geotextile. The geotextile shall comply with requirements specified in Table 02275-1.

2.3 BOND PROPERTIES

A geocomposite shall be created by heat bonding geotextiles to the drainage net with ply adhesion meeting the requirements of ASTM D 413. The bond between the geotextile and the drainage net shall exhibit a minimum peel strength of 2 pounds/inch.

2.4 WOVEN GEOTEXTILE

See Specification 02208, Site Roadways for Material Requirements.

PART 3 - EXECUTION

3.1 DELIVERY, STORAGE, AND HANDLING

Geocomposite drainage net and geotextile material shall be packaged, shipped, stored and handled to prevent material damage. The Installer shall be responsible for keeping the composite drainage net or geotextile free of dirt, dust, mud, or any other foreign materials. Any composite drainage net or geotextile material found to be damaged shall be replaced with new material. Each roll shall be labeled with the manufacturer's name, product identification, lot number, roll number, and roll dimensions.

3.2 INSTALLATION OF GEOTEXTILE

3.2.1 Surface Preparation

The surface receiving the geotextile shall be prepared to a relatively smooth condition, free of obstructions, excessive depressions, debris, and very soft or loose pockets of soil. This surface shall be approved by the QA/QC Inspector prior to geotextile placement.

3.2.2 Placement

Geotextiles shall be placed to the lines and grades shown on the Design Drawings. At the time of installation, geotextiles shall be rejected by the QA/QC Inspector if they have defects, rips, holes, flaws, evidence of deterioration, or other damage.

Geotextiles shall be placed smooth and free of excessive wrinkles.

On slopes, geotextiles shall be anchored at the top and unrolled down the slope. In the presence of wind, all geotextiles shall be weighted with sandbags or other material as approved by the QA/QC Inspector. Geotextiles uplifted by wind may be reused upon approval by the QA/QC Inspector.

3.2.3 Seams

Geotextile seams shall be heat bonded with a 6-inch overlap or overlapped a minimum of 1 foot. On slopes greater than 10 percent, all seams shall be oriented parallel to (in the direction of) the slope unless otherwise approved by the QA/QC Inspector.

Alternately, the Contractor may overlap adjacent panels a minimum of 12 inches.

3.2.4 Repairs

Any geotextile that is torn or punctured shall be repaired or replaced. The repair shall consist of a patch of the same type of geotextile placed over the failed areas and shall overlap the existing geotextile a minimum of 18 inches from any point of the rupture. Patches shall be spot sewn so as not to shift during cover placement.

3.2.5 Final Cover

The geotextile shall be covered with the required materials, in accordance with the Design Drawings and Specifications in a manner as to ensure the geotextiles are not damaged. Cover material shall be placed such that excess tensile stress is not mobilized in the geotextile.

3.2.6 Deficiencies

The QA/QC Inspector will immediately determine the extent and nature of all defects and deficiencies and report them to the Contractor. All defects and deficiencies shall be properly documented by the QA/QC Inspector. The Contractor shall correct defects and deficiencies to the satisfaction of the QA/QC Inspector. The QA/QC Inspector shall observe all repaired defects.

3.3 INSTALLATION GEOCOMPOSITE DRAINAGE NET

3.3.1 Surface Preparation

The geomembrane and/or geotextile shall be inspected to verify that the surface has been cleaned of all soil, rock, and other materials which could damage the composite drainage net.

3.3.2 Placement

The Contractor shall deploy the geocomposite drainage net verifying that the geocomposite drainage net and underlying materials are not damaged. Faulty or damaged composite drainage net shall be replaced or repaired as specified in Section 3.3.6, Repairs. The composite drainage net shall be unrolled downslope keeping the net in slight tension to minimize wrinkles and folds. Soft-soled boots with low heels shall be worn when walking or working on the composite drainage net. Only manufacture-recommended equipment shall be used on the composite drainage net. The composite drainage net shall be maintained free of dirt, mud, or any other foreign materials at all times during construction. Rolls which are contaminated with these materials shall be cleaned or replaced. Adequate loading, as recommended by the Manufacturer, shall be placed to prevent uplift by wind.

3.3.3 Overlap and Fasteners

Adjacent rolls shall be overlapped a minimum of 6 inches. Fasteners, as recommended by the Manufacturer and approved by the QA/QC Inspector, shall be used to join adjacent rolls. Metallic fasteners will not be allowed. Fasteners shall be spaced a maximum of 5 feet along downslope roll overlaps and a maximum of 2 feet along cross slope roll overlaps. Fasteners shall be of contrasting color from the composite drainage net to facilitate visual inspection. Composite drainage nets shall not be welded to geomembranes.

3.3.4 Corners

In the corners of side slopes, where overlaps between rolls of nets are staggered, an extra layer of composite drainage net shall be installed form the top to the bottom of the slope.

3.3.5 Anchoring

Anchoring of composite drainage nets shall be accomplished in conjunction with anchoring of adjacent geosynthetic materials, as shown on the design drawings.

3.3.6 Repairs

Holes or tears in the composite drainage net shall be repaired by placing a patch of composite drainage net extending a minimum of 2 feet beyond the edges of the hole or tear. Approved fasteners, spaced every 6 inches around the patch, shall be used to fasten the patch to the original roll.

3.3.7 Penetrations

Composite drainage net penetration details shall be as recommended by the composite drainage net manufacturer and as approved by the QA/QC Inspector.

3.3.8 Final Cover

Upon completion and acceptance of the composite drainage net in an area, the composite drainage net shall be covered with the required materials in accordance with the Design Drawings and Specifications.

3.3.9 Deficiencies

The QA/QC Inspector will immediately determine the extent and nature of all defects and deficiencies and report them to the Contractor. All defects and deficiencies shall be properly documented by the QA/QC Inspector. The Installer shall correct defects and deficiencies to the satisfaction of the QA/QC Inspector. The QA/QC Inspector shall observe all retests on repaired defects.

- End of Section -

SECTION 02300

EARTHWORK

PART 1 - GENERAL

1.1 WORK INCLUDED

This section describes the material, construction, and testing requirements for performing grading, excavation, filling, trenching, and backfilling activities at the site. The areas that will require the activities include the CAP area, the East Detention Basin (EDB), the North Perimeter Channel, the East Main Drainage Channel, the borrow areas, and the Perimeter Road and the Southeast Cap Area.

1.2 DEFINITIONS

1.2.1 Perimeter Channel

The Perimeter Channel is the channel around the capped area that collects drainage from the capped (geomembrane lined) area and directs the flow to the EDB.

1.2.2 East Main Drainage Channel

The East Main Drainage Channel is the drainage channel from the EDB discharge point to the confluence with No Name Creek.

1.2.3 Degree of Compaction

Degree of compaction is a percentage of the maximum density obtained by the test procedure, standard Proctor, presented in ASTM D 698, abbreviated below as a percent of laboratory maximum density.

1.2.4 Dental Excavation

Dental excavation consists of the removal of soil, rock fragments, rock, decomposed rock, and other materials from seams, faults, cracks, holes, cavities, and caverns established in the field where such removal requires the use of hand tools and other approved methods. Dental excavation shall be performed only as directed by the Geotechnical Engineer.

1.2.5 Dental Concrete

Dental concrete is all concrete placed in earthwork foundation areas to fill cracks and crevices, and to even rock surfaces prior to placing fill.

1.2.6 Spot Subgrade Reinforcement

Spot subgrade reinforcement is the authorized stabilization of soil subgrade by one of the following methods:

1. Partial or complete undercutting and replacement with compacted satisfactory materials (not allowed in Restricted Area).

2. Partial or complete undercutting and replacement with a combination of a woven geosynthetic fabric or geogrid and crushed stone (not allowed in Restricted Area).

3. Bridging with a combination of a woven geosynthetic fabric or geogrid and crushed stone.

1.3 SUBMITTALS

1.3.1 Field Compaction Reports

The soil technicians shall submit formal reports of all compaction tests and retests. The reports shall be furnished to the Engineer daily by the soils technician as soon as possible upon completion of the required tests. Details to be included in the reports are specified in Part 4.

1.3.2 Final Test Report

Test reports shall be maintained by IT Corporation. Details to be included in the report are specified in Part 4.

PART 2 - PRODUCTS

2.1 FILL MATERIAL

2.1.1 General Fill

Materials classified in ASTM D 2487 as CL, SW, SC, SP, and CH, free from roots and other organic matter, trash, debris and frozen material are suitable. Fill material shall be considered satisfactory if the material passes through a 4-inch sieve. Materials classified as GW or GP may also be used in road subgrade fill.

2.1.2 Embankment Fill

Materials classified in ASTM D 2487 as CL or weathered shale which can be broken into clayey material (CL) using approved construction equipment, are suitable. Embankment fill material shall be free from roots and other organic matter, trash, debris and frozen material. Fill material shall be considered satisfactory if the material passes through a 4-inch sieve.

2.2 NONEXPLOSIVE CRACKING AGENT

Any non-explosive cracking agent used shall be Bristar or equivalent. The material shall be a non-toxic powder, mixed with water. The mixture shall be poured into predrilled holes, allowed to harden, expand, and exert pressure to fracture the rock or concrete.

2.3 DENTAL CONCRETE

Dental concrete shall be composed of Portland cement, water, fine and coarse aggregate, a water-reducing admixture, and an air-entraining admixture. The water content of the concrete mixture shall be the minimum necessary to produce a workable mixture. The concrete specifications are included in Section 03300, Concrete.

2.4 CRACK MORTAR

Crack mortar shall consist of 2 parts cement, 1 part hydrated lime, and 8 parts fine aggregate by volume combined with sufficient water and mixed mechanically to yield a workable mortar.

2.5 SLUSH GROUT

Slush grout shall consist of a mixture of 3 parts fine aggregate and 1 part cement by volume, and 5 percent bentonite by weight combined with sufficient water and mixed mechanically to form a material of uniform consistency or as directed by ITs Geotechnical Engineer.

2.6 NONWOVEN GEOTEXTILE

The geotextile for the anchor trenches and as a cushion layer beneath the geomembrane liner shall be a nonwoven fabric which meets the specifications in Table 02300-1.

Table 02300 - 1
Geotextile Physical Properties

Property	Test Method	Minimum Test Value
Fabric Weight, oz/yd^2	ASTM D 5261	7, 8 (typical)
Apparent Opening Size (U.S. Sieve)	ASTM D 4751	70
Permittivity, sec^{-1}	ASTM D 4491	1.0
Puncture, lb	ASTM D 4833	120
Grab Tensile, lb	ASTM D 4632	200
Trapezoidal Tear, lb	ASTM D 4533	50
Burst Strength, psi	ASTM D 3786	400
Ultraviolet Degradation (percent strength retained at 500 hours)	ASTM D 4355	70

MARV[1] - Minimum Average Roll Value in the weaker principal direction, except for apparent opening size. Apparent opening size is maximum average roll value.

2.7 TOPSOIL

Topsoil shall be obtained from approved source onsite unless otherwise approved by the Engineering Manager. The material shall be without admixture of subsoil, refuse, large roots, or foreign matter. The material shall also be reasonably free from hard clods and undesirable material harmful to plant life.

PART 3 - EXECUTION

3.1 GENERAL

The following subsections describe general earthwork activities such as topsoil removal; excavation; rock excavation; preparation for fill; ditch, gutter, and channel excavation; finishing; and topsoil placement. These specifications cover all activities at the site. Additional specifications specific activities related to the Interim Cap Area, EDB, North Perimeter Channel, East Main Drainage Channel, Borrow Areas, Perimeter Road and Southeast Cap are included in Subsections 3.2 through 3.8.

3.1.1 Topsoil Removal

Where indicated or directed, topsoil shall be stripped. Topsoil shall be spread on areas already graded and prepared for topsoil, or stockpiled as directed by the Field Engineer. Topsoil shall be kept separate from other excavated materials, brush, litter, objectionable weeds, roots, stones larger than 2 inches in diameter, and any other materials that would interfere with planting or maintenance operations.

3.1.2 Excavation

The Subcontractor shall perform excavation of every type of material encountered within the limits of the project to the lines, grades, and elevations indicated on the drawings and as specified herein. Grading shall be in conformity with the typical sections shown that the tolerances specified in Section 3.1.6, Finishing. Excavated materials meeting the specifications shall be used as fill within the limits of the specified work. Surplus excavated material not required for fill or embankment shall be disposed in an approved area for surplus material storage or designated waste areas. Excavated material not suitable for fill (i.e., soil classification) shall be disposed in designated waste or spoil areas. During construction, excavation and fill shall be performed in a manner and sequence that will provide proper drainage at all times. Material required for fill or embankment in excess of that produced by excavation within the grading limits shall be obtained from the designated borrow areas.

3.1.3 Rock Excavation

No blasting shall be permitted at this site. Mechanical methods for cracking and excavating rock shall be preferred to chemical methods. All methods for excavating encountered rock shall be approved by the Engineering Manager.

Rocks on the surface or during excavation shall be broken into movable sizes and moved to a designated stockpile or waste location as directed.

3.1.4 Preparation for Fill

Vegetation and other unsuitable fill material shall be removed as specified in Section 02231, Clearing and Grubbing. Unsuitable material shall not be left under the fill area. Sloped ground surface with slopes greater than 1 vertical to 4 horizontal shall be plowed, stepped, or ripped such that the fill material will bond with the existing surface.

All surfaces on or against which fill material will be placed and surfaces specifically directed shall be prepared as below or other wise specified. All foundations shall not be wetted prior to placement of fill, except as otherwise approved.

Areas of the subgrade that rut, pump, or deflect excessively during proof rolling shall be stabilized by the spot subgrade reinforcement method recommended by the design engineer.

Rock surfaces upon which fill will be placed shall be cleaned of loose rock fragments. The cleaning shall consist of removal of severely and moderately weathered blocks and fragments of rock, which might exist locally, by methods which will not fracture the rock surface; removal of loose dirt and debris; and removal of boulders, cobbles, and gravel as directed.

Prior to placement of fill, the foundation elevation and coordinates shall be surveyed.

3.1.5 Ditch, Gutter, and Channel Excavation

Excavation of ditches, gutters, and channels shall be accomplished by cutting accurately to the cross sections, grades, and elevations on the drawings. Ditches, gutters, and channels shall not be excavated below the grades shown. Excessive open ditch, gutter, or channel excavation shall be backfilled with suitable, thoroughly compacted, material or with riprap, if approved by the field engineer, to the grades shown. Excavated material shall be disposed of as directed. The Contractor shall maintain excavations free from detrimental material such as leaves, brush, sticks, trash, and other debris until final acceptance of the work.

3.1.6 Finishing

The surface of excavations, embankments, and subgrades shall be finished to a smooth and compact surface in accordance with the lines, grades, and cross sections or elevations shown in the drawings. The degree of finish for graded areas shall be so that storm water flows leaving the site do not exceed predevelopment flow conditions as given by the Statement of Work (SOW) and as specified in paragraph 3.7.1. In addition, the Perimeter Channels shall contain flow

developed from the 100-year, 24-hour storm event. The final as-built drawings will be used for input into the final calibrated SEDCAD™ 4 for Windows® (SEDCAD™) storm water model included in the Remaining Work Remedial Action Construction Report.

Gutters and ditches shall be finished in a manner that will result in effective drainage. The surface of areas to be grassed shall be finished to a finished to smoothness suitable for topsoil placement.

3.1.7 Topsoil Placement

On areas to receive topsoil, the compacted subgrade soil shall be scarified to a minimum depth of 2 inches for bonding of topsoil with subsoil. Topsoil shall be spread evenly and graded to the elevations and slopes shown on the drawings. Topsoil shall not be spread when frozen or excessively wet or dry. Material required for topsoil in excess of that produced by excavation shall be obtained from an onsite location, unless otherwise approved by the Engineering Manager.

3.2 INTERIM CAP AREA

The Interim Cap Area includes all area inside the Restricted Area Fencing.

Work on the Cap Area shall be divided into sections. The Cap construction sequence shall be provided in the RA Work Plan. No more area shall be opened for soil placement than can be protected in one day. Prior to placing the fill material, the existing geomembrane liner shall be cut into panel sections and pulled back from the work area. A temporary liner cover shall be readily available to pull back over the graded work area within the trench area prior to a precipitation event or at the end of each workday. As directed by the Site Manager, the graded work areas may remain open during periods of precipitation events and at the end of each workday if construction practices are employed to ensure minimization of infiltration through the placed earthen material. All uncovered soil areas shall be rolled and compacted prior to work shut down.

The final grade shall match the grade, lines, and elevations shown on the drawings. Fill shall be placed in 10-inch lifts of loose fill and compacted as specified in Part 4. Satisfactory fill material may be obtained from stockpiled material or from the borrow pits. The Contractor shall take care not to damage sump and/or monitoring well extensions and use mechanical tampers to compact around the extensions. No vibratory compaction will be allowed over the EMC Bunkers or trenches. Testing and compaction requirements are discussed in Part 4. No stones larger than 1 inch in any dimension shall protrude above the final layer, following proof-rolling using a smooth-drummed roller.

After a work area has been filled, the existing geomembrane will be pulled back into place. The upgradient liner shall overlap the downgradient liner. Extra liner material shall also be made available for areas in which the existing liner will not cover the new fill area. Sandbags shall be used for temporary ballast to hold the existing or additional liner in-place until the new

geomembrane liner is completed. The new geomembrane liner will be installed directly over the existing liner as specified in Section 02270, Geomembrane.

The new liner shall be anchored using anchor trenches and berms as shown on the drawings. The anchor trenches shall be lined with a nonwoven geotextile and backfilled with general fill material. The anchor trenches and berms shall be backfilled with general fill material. The geomembrane shall be welded in the locations shown on the layout drawing.

Ditches will be installed in the locations shown on the drawings and will meet the requirements specified in 3.1.5.

3.3 EDB

The western section of the proposed EDB will be excavated and a temporary embankment constructed prior to the excavation for and construction of the permanent embankment. The temporary EDB embankment shall be removed when the permanent EDB embankment has been constructed to an elevation of 1,010 feet. The material excavated during removal of the temporary EDB embankment may be used as fill for the permanent EDB embankment. Specific requirement for the temporary embankment and the permanent embankment are included in Section 3.3.1 and 3.3.2, respectively.

3.3.1 EDB Temporary Embankment

The Temporary EDB Embankment shall be constructed to the grades, lines, and elevations shown on the drawings. No blasting shall be permitted during excavation of the EDB.

3.3.1.1 Storm Water Diversion

Prior to excavation and placement of fill the existing outlet pipe shall be extended horizontally as shown on the drawings. The extension pipe is expected to be at grade. The Subcontractor shall place soil around the pipe and carefully compact around the pipe. Mechanical tampers may be used to compact around the pipe.

3.3.1.2 Foundation Preparation

Excavation shall begin on the western side of the EDB. At a minimum, the topsoil shall be removed and stockpiled for later uses. Material excavated from the embankment area suitable for embankment fill shall be used as fill for the temporary or permanent EDB embankments.

3.3.1.3 Embankment Construction

The temporary EDB embankment shall be constructed with embankment fill. The material shall be placed in 8-inch lifts of loose material or 4-inch lifts of loose material if hand compaction is anticipated in confined areas. Each lift shall be spread uniformly on a surface that has been moistened or aerated, as necessary, and scarified or broken up so the new material will bond with the existing surface. After spreading, each lift will be broken up, moistened, or aerated, as

necessary, and compacted. Compaction shall be accomplished by a sheepsfoot roller or other approved equipment and shall meet the compaction requirement given in Part 4.

3.3.1.4 Seeding

The embankment shall be seeded as described in Section 02935, Turf. A topsoil layer shall not be required.

3.3.2 Permanent EDB Embankment

Following construction of the temporary embankment, the existing EDB embankment shall be removed, the key trench excavated and filled, and the permanent EDB embankment constructed. The permanent embankment shall be constructed to the grades, lines, and elevations shown on the drawings. No blasting shall be permitted during excavation of the EDB.

3.3.2.1 Storm Water Diversion

Initially the storm water contained by the temporary EDB will flow through the extended existing outlet pipe as shown on the drawings. The following sequence shall be followed to install and divert storm water through the new outlet pipe:

1. The existing embankments shall be excavated to an elevation at the top of the key trench.

2. The trench for the new outlet pipe shall be excavated as shown on the drawings. Additional excavation shall be required where the outlet pipe trench crosses the proposed key trench. Where these trenches cross, the bottom of the outlet pipe trench shall be excavated to an elevation that is equivalent to the bottom of the proposed key trench.

3. Consideration shall be given for the pipe bell and wall thickness. All concrete shall meet the specifications in Section 03300, Concrete.

4. The proposed H-flume and riser shall be installed as shown on the drawings and as specified in Section 02725, Principle Spillway Flow Measurement (EDB).

5. Flow from the temporary embankment shall then be rerouted from the existing outlet pipe to the new riser, as shown on the drawings.

Excavation of the key trench including removal of the existing pipe shall then proceed. The existing outlet pipe shall be placed in the EMC Bunkers after removal and compaction. Care shall be taken when placing fill not to damage the new outlet pipe and associated structures. The pipe shall be supported along its length in the trench to the elevation required for placing the 8-inch lift of concrete. The first lift of concrete will be placed in the trench and vibrated in place, followed by the second lift.

3.3.2.2 Foundation Preparation

The existing embankment, key trench, and embankment area shall be excavated as shown on the drawings. At a minimum, the soft silty clay which is present to a depth of approximately 2 feet shall be removed and stockpiled for later uses. Material excavated from the embankment area suitable for embankment fill shall be used as fill for the permanent EDB embankment. Material unsuitable for embankment fill, but suitable for general fill shall be stockpiled and used as general fill.

ITs Geotechnical Engineer shall approve the foundation excavation prior to placement of any embankment fill material. If solid rock is encountered in the key trench and embankment area, prior to excavating to the proposed lines, grades, and elevations; ITs Geotechnical Engineer may terminate excavation and declare the rock surface as the foundation for the proposed embankment.

Rock surfaces in the key trench area upon which embankment fill will be placed shall be prepared by removing all loose blocks and fragments of rock by barring, prying, and other hand methods which will not further fracture the rock. Local fractured zones, crevices, or rock overhangs, including seams, faults, cracks, holes, cavities, and caverns, shall be removed by manual methods. Dental concrete shall be used to backfill dental excavation and shall be finished with a broom finish as directed. Crack mortar shall be used for filling cracks and holes too small to fill with dental concrete. Immediately prior to placement of fill, the concrete, mortar, and rock surfaces shall be thoroughly cleaned of dirt and debris by streams of high pressure water and/or air. The surface to receive fill shall be moistened if necessary but shall be free of running or standing water. An approximate 0.5-inch thickness of slush grout shall be broomed onto the cleaned surfaces of dental concrete, mortar, and rock as directed, immediately prior to placing embankment fill.

Earth surfaces upon which fill is to be placed shall be leveled sufficiently to allow efficient use of compacting equipment. The surfaces shall be free of standing or running water and shall be moistened or dried as directed. The surface shall be proof rolled for a minimum of 4 passes with approved equipment, if required. Earth surfaces shall be scarified to a depth of 4 inches, and this depth shall be compacted along with and as part of the first lift of fill material.

If seepages or springs are encountered on the embankment foundation, water should be diverted away with a French drain or other means to provide dry conditions for fill placement. If a French drain is required, the French drain shall be grouted off after sufficient fill is placed above the French drain.

Prior to placement of fill, the foundation and keyway trench elevations and coordinates shall be surveyed.

3.3.2.3 Embankment Construction

Backfill shall be placed as described in 3.3.1 and compacted to meet the requirements in Part 4.

The embankments shall be constructed from embankment fill. The material shall be placed in 8-

inch lifts of loose material or 4-inch lifts of loose material if hand compaction is anticipated in confined areas. Each lift shall be spread uniformly on a surface that has been moistened or aerated, as necessary, and scarified or broken up so the new material will bond with the existing surface. After spreading, each lift will be broken up, moistened, or aerated, as necessary, and compacted. Compaction requirements are detailed in Part 4, Quality Control. Compaction shall be accomplished by a sheepsfoot roller or other approved equipment.

3.3.2.4 Final Surface Preparation

Topsoil shall be placed over the final lift of compacted soil. The embankment shall be seeded as described in Section 02935, Turf. Riprap shall be placed to armor the embankment as shown on the drawings.

3.4 NORTH CHANNEL

The EDB and East Perimeter Channel shall be installed prior to excavation of the North Channel. Construction of the North Channel shall begin at the east end and progress to the west to allow for drainage. Pumps shall be used as required to keep the excavation area dry. The North Channel shall be excavated to the grades, lines, and elevations shown on the drawings. No blasting shall be performed. Rock encountered shall be broken by an approved method and moved to a stockpile, placed within the fill at the south end of the cap or as directed by the Field Engineer. Satisfactory excavated material shall be used as fill material and stockpiled as directed.

During construction, storm water, dewatering will be necessary and the water shall be discharged to the East Perimeter Channel. The North Channel will be lined as shown on the cross-section per the Design Drawings.

3.5 EAST MAIN DRAINAGE CHANNEL

At the confluence of the East Main Drainage Channel and No Name Creek, 200 feet of the East Main Drainage Channel shall be cleared and grubbed, excavated, and lined with riprap. Clearing and grubbing shall be performed as specified in Section 02230, Clearing and Grubbing. The slopes shall be graded as shown on a typical cross section included in drawings. This section of the East Main Drainage Channel shall be lined with riprap.

3.6 BORROW AREAS

Borrow material shall be excavated from the designated borrow area, following the clearing and grubbing as specified in Section 02231, Clearing and Grubbing.

Except as otherwise permitted, borrow pits shall be excavated to afford adequate drainage. Unsuitable fill material shall be disposed of in the designated spoil area or as directed. Borrow pits shall be neatly contoured and sloped to drain during and upon completion of the excavation. The Contractor shall ensure that borrow pits will be operated with minimal detrimental effects to the natural environment. Reseeding of borrow areas shall be performed in accordance with Section 02935, Turf.

3.7 PERIMETER ROAD

3.7.1 Subgrade Preparation

The degree of finish for the subgrade shall be shaped to form a smooth transition along the Cap to eliminate entrapment of water along the Perimeter Road.

Rock encountered in any cut section shall be excavated to a depth of 6 inches below the finish grade for the subgrade without using explosives. Soft or unsuitable material shall be removed and replaced with general fill material as directed. Low areas shall be filled with general fill material. Any fill required shall be installed in 8-inch lifts of loose material. Compaction shall be accomplished by sheepsfoot rollers, pneumatic-tired rollers, steel-wheeled rollers, vibratory compactors, or other approved equipment. The subgrade shall be compacted and tested as specified in Part 4, Quality Control.

Ditches shall be cut in the locations shown on the drawings and meet the requirements of 3.1.5.

3.7.2 Surfacing

The subgrade shall be covered with an aggregate surface as specified in Section 02208, Site Roadways.

3.8 SOUTHEAST CAP AREA

The Southeast Cap Area will be excavated according to the rough grading plan. The subgrade shall be shaped to the grade, line, and cross-section as shown on the drawings. The elevation of the subgrade shall not vary more than 0.20 feet from the grade and cross-section established on the Design Drawings. Rock encountered shall be broken by an approved method (refer to Section 3.1.3) and moved to a stockpiled as directed to the Field Engineer. Satisfactory excavated material shall be used as general fill material and stockpiled as directed.

Anchor trenches will be installed in locations shown on the drawings and will meet the requirements specified in 3.1.5. The geomembrane liner shall be anchored, using anchor trenches, as shown on drawings. The anchor trenches will be lined with geomembrane and backfilled with general fill material. The geomembrane shall be welded in locations shown on layout drawings.

Nonwoven geotextile, single composite drainage net, riprap, and sand will be installed over geomembrane as indicated on drawings and specified in the applicable specifications.
The final grade shall match the grade, lines, and elevations shown on the drawings. Fill shall be placed in 10-inch lifts of loose fill general materials and compacted as specified in Part 4. The Southeast cap will tie into the Interim Cap as shown in the drawings.

PART 4 - QUALITY CONTROL

4.1 REQUIRED TESTS, FREQUENCIES, AND CRITERIA

During placement of fill for the Cap area, the temporary EDB embankment, the permanent EDB embankment, drainage channels, and the Perimeter Road subgrade, the material shall be tested in accordance with Tables 02300-2, 02300-3, and 02300-4, respectively.

Table 02300-2

Interim Cap Area - General Fill Testing Requirements

Parameter	Test Method	Minimum Testing Frequency*	Criteria
Gradation	ASTM D 422	1 per 5,000 yd^3, and 1 per soil type	General Fill
Liquid/Plastic Limits (cohesive soil only)	ASTM D 4318	1 per 5,000 yd^3, and 1 per soil type	General Fill
Moisture Content	ASTM D 2216	1 per 5,000 yd^3, and 1 per soil type	General Fill
Density-Standard Proctor	ASTM D 698	1 per 5,000 yd^3, and 1 per soil type	Not Applicable
Water Content-Field	ASTM D 3017	1 per 500 yd^3, day, or lift	-7 to +3 Percent of Optimum
Density-Field	ASTM D 2922	1 per 500 yd^3, day, or lift	85% Maximum Dry Density
Density-Verify	ASTM D 1556	1 per 40 density-field	± 3% Field Density

*Whichever is more often.

The Contractor will not be required to meet these compaction requirements over demolished buildings and/or the EMC Bunkers. A minimum of four passes shall be made over these areas with a smooth drummed or rubber tire roller.

Technical Change 105 decreases the testing frequency for placement of fill. This technical change affects Tables 02300-2, 02300-3, and 02300-4.

Table 2300-3

Temporary and Permanent EDB Embankment - Embankment Fill Testing Requirements

Parameter	Test Method	Minimum Testing Frequency*	Criteria
Gradation	ASTM D 422	1 per 2,000 yd^3, and 1 per soil type	CL Type Soil
Liquid/Plastic Limits	ASTM D 4318	1 per 2,000 yd^3, and 1 per soil type	CL Type Soil
Moisture Content	ASTM D 2216	1 per 2,000 yd^3, and 1 per soil type	
Water Content-Field	ASTM D 3017	1 per 200 yd^3, day, or lift	-1 to +3 % Optimum
Density-Field	ASTM D 2922	1 per 200 yd^3, day, or lift	95% Maximum Dry Density
Density-Verify	ASTM D 1556	1 per 40 density-field	± 3% Field Density
Density-Standard Proctor	ASTM D 698	1 per 2,000 yd^3, and 1 per soil type	Not Applicable

*Whichever is more often.

Table 2300-4

Perimeter Road Subgrade - General Fill Testing Requirements

Parameter	Test Method	Minimum Testing Frequency*	Criteria
Gradation	ASTM D 422	1 per 5,000 yd^3 and 1 per soil type	General Fill
Liquid/Plastic Limits (cohesive soil only)	ASTM D 4318	1 per 5,000 $yd^3$and 1 per soil type	General Fill
Moisture Content	ASTM D 2216	1 per 5,000 $yd^3$and 1 per soil type	General Fill
Density-Standard Proctor	ASTM D 698	1 per 500 yd^3, day, or lift	Not Applicable
Water Content-Field	ASTM D 3017	1 per 500 yd^3, day, or lift	-2 to +3 % Optimum
Density-Field	ASTM D 2922	1 per 500 yd^3, day, or lift	90% Maximum Dry Density
Density-Verify	ASTM D 1556	1 per 40 density-field	± 3% Field Density

*Whichever is more often.

4.2 VISUAL INSPECTION

The following items shall be conducted, at a minimum, whenever fill materials are being placed:

- Document the type and quantity of earthwork equipment.
- Observe coverage and number of passes made by compaction equipment.

- Inspect and document lift thickness.

- Visually inspect to detect the presence of organic matter. Fill material shall be considered satisfactory if the material passes through a 4-inch sieve.

4.3 CORRECTIVE ACTION

In an area that does not conform with the specifications and the area needs to be repaired, the Contractor shall define the extent of the area requiring repair. The failed area limits shall be defined by conducting additional testing in a radial pattern from each failed test until the results fall within the specifications. If the Contractor chooses not to request additional tests, the Contractor shall repair the area that extends from the failing test out to the boundaries defined by the last passing test.

4.4 FIELD COMPACTION REPORTS

The information in the Field Completion Report shall include, but shall not be limited to, the following:

1. Document the type and quantity of earthwork equipment.
2. Observed coverage and number of passes made by compaction equipment.
3. Inspect and document lift thickness with comments about additional material being placed, if required.
4. Visual inspect to detect the presence of organic matter or irreducible matter.
5. Date of the test and date submitted.
6. Location of test.
7. Wet weight, moisture content, and dry weight of field sample.
8 Description of material.
9. Ratio of field dry density to maximum laboratory dry density expressed as a percent.
10. Comments about recompaction, if required.

4.5 FINAL TEST REPORTS

The information included in the Final Test Reports shall include, but shall not be limited to, the following:

1. Daily Logs
2. Field Compaction Reports
3. Lab Data Packages
4. Hard and electronic Survey Results.

- End of Section -

SECTION 02420

STORM WATER, EROSION, AND SEDIMENT CONTROLS

PART 1 - GENERAL

1.1 WORK INCLUDED

This work will include the furnishing of all labor, materials, tools, equipment, and other items necessary for the manufacture, delivery, handling, storage, and installation of storm water and erosion control products described. Temporary and permanent erosion control devices are included in this specification.

1.2 DEFINITIONS

1.2.1 Storm Water

Storm water is water from any natural precipitation event, including melting or frozen water, which flows into excavation and/or work areas.

1.3 SUBMITTALS

1.3.1 AB Mat Layout Plan

The Subcontractor shall submit a panel layout plan for the articulating concrete block (AB) mats. The layout plan shall be submitted to IT at least 15 days prior to delivery of the AB mats to the site. The shop drawings shall show the layouts of the proposed size, number and position of the all fabricated AB mats and the location of the clamps and anchors. The shop drawings shall show details of the connections between AB mats, the anchoring of the AB mats, and any other pertinent information regarding the installation of the AB mats.

PART 2 - PRODUCTS

2.1 TEMPORARY CONTROLS

2.1.1 Silt Fence for Erosion Control

Silt fencing shall be made of strong rot-proof synthetic fiber. The fibers shall be resistant to deterioration due to ultraviolet light and heat exposure. The synthetic fibers shall be woven into a fabric and the fence is required to have a mesh backing. The fencing material shall have a strong tie cord in the top of the material. Wood stakes to secure the fence shall be minimum cross-section dimensions of 2 inches by 2 inches and be 5 feet long.

2.1.2 Straw or Hay Bales

Bales for erosion control shall be either straw or hay bales tied firmly with a wire or plastic ties in air dry condition. Bales shall be approximately 14 to 16 inches high by 18 inches by 36 inches in size. Wood stakes to secure the bales shall be minimum cross-section dimensions of 2 inches by 2 inches and be 3 feet long.

2.1.3 Erosion Control Fabric

Erosion control fabric shall be constructed of 100 percent UV stabilized polypropylene or polyester fiber encased in an UV stabilized top and bottom net. The fabric shall be woven and have a minimum weight of 6 ounces per square yard.

2.2 PERMANENT CONTROLS

2.2.1 Articulating Concrete Block Mat

The AB mats shall be fabricated for the layouts as shown on the design drawings. The AB mats shall be constructed from concrete blocks connected by interwoven stainless steel cables. A geotextile shall be attached to the bottom of the AB mat. Table 02420-1 shows the dimensions and weight of each system of block to be used at MFDS.

Table 02420-1

AB Mat Systems

System	Weight	Base Dimension	Top Face Dimension	Height
C.C. 35	35 psf	15.5 in. (Typical)	11.5 in. (Typical)	4.5 in.
C.C. 40	45 psf	15.5 in. (Typical)	11.5 in. (Typical)	5.5 in.
C.C. 70	70 psf	15.5 in. (Typical)	11.5 in. (Typical)	8.5 in.

2.2.1.1 Concrete

The concrete shall have a minimum strength of 4,000 psi after 28 days and shall meet an approved DOT mix design. Air entrainment (between 5 and 7 percent air) shall be added to the concrete mix.

2.2.1.2 Cable

The cable shall be Type 302 or 304 stainless steel aircraft cable and be of type 1 x 19 construction. The minimum cable diameter for the cable along the length and width of the AB mat shall be no less than 5/32 inch and ⅛ inch, respectively.

2.2.1.3 Geotextile

The geotextile fabric attached to the AB mats shall be an 8-ounce per square yard nonwoven fabric. The geotextile fabric shall have approximately a 2-foot overlap on three sides of the mat.

2.2.1.4 Clamps

Stainless steel U-type clamps shall be provided to secure adjoining AB mats as recommended by the manufacturer and shown on the panel layout.

2.2.2 Wire Mesh Gabions

2.2.2.1 Steel Twisted Wire Mesh Gabions

Gabion basket units shall be on nonraveling construction and fabricated from a double-twisted hexagonal wire mesh. The size of the mesh openings shall be approximately 3¼ inches by 4½ inches. The Gabion mesh wires shall be wrapped around the selvage wire no less than 1½ times and shall interconnect with the adjacent mesh wires. All steel wire used shall be galvanized prior to fabrication into mesh. All Gabion diaphragm and frame wire shall have soft tensile strength of 60,000 psi with a tolerance of minus 2,000 psi. The galvanized wire shall have a Finish 5, Class 3, zinc coating as indicated in ASTM A 641. The weight of the coating shall be determined by ASTM A 90. The grade of zinc used for coating shall be High Grade or Special High Grade as prescribed in ASTM B 6, Table 1. The uniformity of the coating shall equal or exceed four 1-minute dips by the Preece Test, as determined by ASTM A 239. Wire used for lacing or as internal connecting wire within the basket cells may have soft tensile strength designation. As an alternative to lacing, wire fasteners may be used if approved by the Engineering Manager. All wire used shall meet the requirements in Table 02420-2.

Table 02420-2

Gabion Wire Requirements

Type of Wire	Coated Wire Diameter (inches)	Coating Weight (oz/ft^2)	Tensile Strength (psi)
Mesh Wire	0.120	0.85	60,000
Selvage Wire	0.150	0.85	60,000
Lacing or Internal Connecting Wire	0.087	0.70	60,000

The Gabion mesh and connections require the minimum strengths in Table 02420-3.

Table 02420-3

Gabion Mesh and Connection Required Strengths

Mesh or Connection Location	Strength (lb/ft)
Wire mesh (pulled parallel to wire twists)	2,000
Wire mesh (pulled perpendicular to wire twists)	1,000
Connection of selvage wire to mesh	1,400
Connection of end panel to base	1,200
Connection to diaphragms	600

2.2.2.2 Fabrication of Wire Mesh Baskets

Gabions shall be fabricated in such a manner that the sides, ends, diaphragms, and lids can be assembled at the construction site into rectangular baskets which meet the sizes specified and shown on the drawings. Gabions shall be of single unit construction. Where necessary, the Gabion shall be equally divided into cells with diaphragms of the same mesh as the body of the Gabion. The Gabion shall be furnished with the necessary diaphragms secured in the proper position on the base such that no additional tying at this junction is necessary.

2.2.3 Riprap

2.2.3.1 Stone

Riprap shall be in accordance with Section 02271, RIPRAP.

2.2.3.2 Nonwoven Geotextile

The nonwoven geotextile to be placed underneath riprap in the location shown on the drawings shall comply with Table 02420-4.

Table 02420-4

Geotextile Physical Properties

Property	Test Method	Minimum Value
Fabric Weight, oz/yd^2	ASTM D 3776	7
Apparent Opening Size (U.S. Sieve)	ASTM D 4751	70
Permittivity, sec^{-1}	ASTM D 4491	1.0
Puncture, lb	ASTM D 4833	90

Property	Test Method	Minimum Value
Grab Tensile, lb	ASTM D 4632	200
Trapezoidal Tear, lb	ASTM D 4533	70
Burst Strength, psi	ASTM D 3786	350
Ultraviolet Degradation (percent strength retained at 500 hours)	ASTM D 4355	70

PART 3 - EXECUTION

3.1 GENERAL

3.1.1 Drainage

Clean surface water shall be directed away from excavations so as to prevent erosion, undermining, and/or unnecessary generation of contaminated water. Diversion ditches, dikes, straw or hay bales, silt fencing, and grading shall be provided and maintained as detailed in the design drawings and RA Work Plan for Remaining Work. Excavated slopes and backfill surfaces shall be protected to prevent erosion. Excavation shall be performed so that the site shall be continually and effectively drained.

3.1.2 General Dewatering

Storm water that flows into an excavation shall be removed to prevent sloughing of excavation slopes and walls into the excavation. The remedial areas shall be kept as dry as possible by the use of diversions, pumps, sumps, berms, ditches, covers, or other methods as described.

3.2 TEMPORARY CONTROLS

3.2.1 EDB Temporary Dike

The EDB temporary embankment shall be constructed as shown on the drawings and as specified in Section 02300, EARTHWORK. This temporary embankment shall form the detention basin to detain storm water until the proposed EDB embankment is constructed.

3.2.2 Erosion Control Fence

A 3-inch deep trench shall be excavated just outside the posts along the full length of the silt fence. The posts shall be installed at an incline toward the runoff source at an angle of not more than 20 degrees from vertical. The posts shall be driven into the ground so that no more than 3 feet protrude above the ground. Attach the fabric to the posts, and place the fabric into the trench and backfill the soil.

3.2.3 Straw or Hay Bales

Straw or hay bales shall be installed when required to prevent erosion.

3.2.4 Maintenance

Maintenance shall consist of the repair of eroded areas including reseeding and the repair or replacement and restapling of loose or undermined erosion control material. The Contractor shall remove the silt on the uphill side of the silt fence whenever the silt is within 18 inches of the top of the fence.

3.3 PERMANENT CONTROLS

3.3.1 Articulating Concrete Block Mats

The AB mats shall be placed in the locations shown on the design drawings. The AB mats shall be placed from the downstream location to the upstream location so the geotextile overlaps form a shingled surface to direct storm water flow over the joints. The AB mats shall be placed and anchored as shown on the design drawings with care taken to maintain the integrity of the liner.

3.3.2 Wire Mesh Gabions

3.3.2.1 Foundation Preparation

After excavation or stripping to the extent indicated on the drawings or as directed by the Field Engineer, all remaining loose or otherwise unsuitable materials shall be removed. All depressions shall be carefully backfilled to the grades shown on the drawings with free-draining material. Any buried debris which would interfere with the proper installation of the gabions shall be removed, and the void space carefully backfilled and compacted.

3.3.2.2 Gabion Units

Empty Gabion units shall be assembled individually and placed on the approved surface to the lines and grades as shown on the drawings with the sides, ends, and diaphragms erected in such a manner to ensure the correct position of all creases and that the tops of all sides are level. Filling of Gabion units in one place and then transporting them to their final position in the work will not be permitted. The front row of Gabion units shall be placed first and successively constructed toward the top of the slope or the back of the structure. All Gabion units shall be properly staggered horizontally and vertically as shown on the drawings. The finished Gabion structure shall have no gaps along the perimeter of the contact surfaces between adjoining Gabion basket units.

All adjoining empty Gabion units shall be connected by lacing wire/or wire fasteners along the perimeter of their contact surfaces in order to obtain a monolithic structure. Lacing of adjoining basket units shall be accomplished by continuous stretching with alternating single and double loops at intervals of not more than 5 inches, and a half hitch shall be included at every double loop. All lacing wire terminals shall be securely fastened. Wire fasteners may be used in lieu of

lacing wire for forming individual baskets and joining empty baskets together prior to stone filling. All joining shall be made through selvage-to-selvage or selvage-to-edge wire connection; mesh-to-mesh or selvage-to-mesh wire connection is prohibited except in the case where baskets are offset or stacked and selvage-to-mesh or mesh-to-mesh wire connection would be necessary. Wire fasteners shall not be used to tie or join stone-filled baskets, unless approved by the Engineering Manager. Each wire fastener shall be properly installed and closed. As a minimum, a fastener shall be installed at each mesh opening at the location where mesh wire meets selvage or edge wire. The initial line of basket units shall be placed on the prepared ground surface and partially filled to provide anchorage against deformation and displacement during filling operations. After adjoining empty basket units are set to line and grade and common sides with adjacent units thoroughly laced or fastened, they shall be placed in tension and stretched to remove any kings from the mesh and create a uniform alignment. The stretching of empty basket units shall be accomplished in such a manner as to prevent any possible unraveling.

Stone filling operations shall carefully proceed with placement by hand or machine so as not to damage galvanized wire coating, to assure a minimum of voids between the stones, and the maintenance of alignment throughout the filling process. Undue deformation and bulging of the mesh shall be corrected prior to further stone filling. The maximum height from which the stone may be dropped into the basket units shall be 36 inches. Connecting wires or alternatively the preformed stiffeners shall be looped around two twisted wire mesh openings or a welded wire joint at each basket face and the wire terminals shall be securely twisted to prevent their loosening. For twisted wire gabions, the internal connecting wires or preformed stiffeners are installed as shown on the drawings. All along exposed faces, the outer layer of stone shall be carefully placed and arranged by hand to ensure a neat and compact appearance. The last layer of stone shall be uniformly overfilled 1 to 2 inches to compensate for the future settlement in rock but still allow for the proper closing of the lid and to provide an even surface that is uniform in appearance. Final adjustments for compaction and surface tolerance shall be done by hand.

Lids shall be stretched tight over the stone fill using only an approved lid closing tool, until the lid meets the perimeter edges of the front and end panels. Using crowbars or other single point leverage bars for lid closing shall be prohibited. The lid shall then be tightly tied with lacing wire, or with wire fasteners, along all edges, ends, and internal cell diaphragms by continuous stitching with alternating single and double loops at intervals of not more than 5 inches, and a half hitch shall be included at every double loop. Special attention shall be given to see that all projections or wire ends are turned into the baskets.

Where shown on the drawings or where a complete Gabion unit cannot be installed because of space limitations, the basket unit shall be cut, folded, and wired together to suit existing site conditions. The mesh must be cleanly cut and the surplus mesh cut out completely, or folded back and neatly wired to an adjacent Gabion face. The assembling, installation, filling, lid closing, and lacing of the reshaped Gabion units shall be carried out as specified above.

3.3.3 Riprap

Riprap shall be placed in the locations and to the depths shown on the design drawings. The riprap shall be placed directly on the ground surface in the EDB and on the geotextile fabric specified in paragraph 2.2.3 in the East Main Drainage Channel. The stone shall not be dropped

from a height greater than 12 inches and shall be placed form the downgradient end of the coarse to the upgradient end. The riprap shall be positioned in a manner that will produce a well-graded uniform distribution of the various stone sizes and a well-keyed, multi-layered mass of rock with the least practical void space.

- End of Section -

SECTION 02671

WELL INSTALLATION

PART 1 - GENERAL

1.1 WORK INCLUDED

This section includes the labor, material, and equipment requirements for installing monitoring wells at the MFDS.

1.2 GENERAL REQUIREMENTS

1.2.1 Site Layout

Well locations are specified on the drawings.

1.2.2 Staging and Storage Areas

The Contractor Staging Area will be specified at a later time.

1.2.3 Contractor Responsibilities

The Contractor shall ensure that any Subcontractor responsible for installing monitoring wells is qualified and competent to perform the job. The Contractor shall provide a geologist or engineer to over see all the activities on the site during the installation of the wells.

1.2.4 Qualification of Personnel

All field personnel responsible for the installation of wells shall have 40 hours of the United States Occupational Safety and Health Administration (OSHA) training and the Contractor shall ensure that all drilling will be performed under the direction of a qualified supervisor experienced in well construction. The well driller shall be appropriately registered in the Commonwealth of Kentucky.

1.2.5 Regulatory Approving Agencies

The sole regulatory agency responsible for the approval of plans and applicable permits for the execution of this work is in the Environmental Protection Agency.

1.3 SUBMITTALS

Required submittals are: documentation that all materials conform to the specifications stated herein, filter pack grading curves, lithologic log of the boring (if required), and final as-built well construction diagrams showing total boring depth, depth to top of screen, depth to top of the filter pack, depth to top of the seal, and well protection type.

1.3.1 Boring Logs

Submittal of boring logs as documented in paragraph Boring Log Documentation.

1.3.2 Sand Pack

Submit sieve analysis of sand pack.

1.3.3 Well Screen Slot Size

The intended slot size for monitoring and extraction wells, and manufacturer's technical data shall be submitted.

1.3.4 Qualifications

Contractor shall submit qualifications and license/registrations of the driller.

1.4 APPLICABLE PUBLICATIONS

401 KAR 6:310 - Section 13, Monitoring Well Construction
EPA, Region 4, May 1996. Section 6, Design and Installation of Monitoring Wells
Environmental Investigation Standard Operating Procedures and Quality Assurance Manual

1.5 ABANDONMENT OF WELLS

If the well is abandoned because of loss of tools or for any other cause, the well shall be abandoned as specified in Section 02091, Well Abandonment.

PART 2 - PRODUCTS

2.1 CASINGS

The casings shall be as specified on the drawings and Section 3.3.

2.2 SCREEN

Screen shall be wire wound screen with 0.01-inch slots.

2.3 SAND PACK

Sand pack shall be a product of a commercial sand and gravel manufacturer, shall be properly sized and graded for the surrounding soil and water encountered, and shall be composed of round, hard, waterworn siliceous gravel, free of flat or elongated pieces, organic matter, or other foreign matter. The sand shall be of such size as will allow the maximum flow of water into the well and prevent the infiltration of sand and silt. The gradation of the filter sand shall be such that the uniformity coefficient is not more than 2.5.

2.4 CEMENT/BENTONITE GROUT

Cement/bentonite grout shall consist of Portland cement conforming to ASTM C 150, Type I or II, sand, bentonite, and water. Cement/bentonite grout shall be mixed using 7 to 8 gallons of water per 94-pound bag of Portland cement (Type I) and 3 to 5 pounds of powdered bentonite.

2.5 BENTONITE

Bentonite pellets shall be hard pellets with retarded swelling characteristics or ▯-inch chips of Wyoming-type sodium montmorillonite or approved equal. Bentonite pellets treated with organic polymers, fillers, or adulterating agents shall not be used. Bentonite powder mixed as a slurry for pumping below the water table will be used where the well seal is below the water table. If used, bentonite slurry will be a high solids grout (30 percent solids) using a high-grade bentonite powder.

PART 3 - EXECUTION

The following is a general description of the specifications for installing monitoring wells at MFDS. Changes to specifications must be approved by the Engineering Manager to meet the monitoring requirements for individual wells. Types of well installation situations that may occur at Maxey Flats are:

- Type A: This includes a number of planned alluvial or compliance wells that will be shallow in depth and installed into the alluvium at the lower edges of the hillslope around the site. These wells will not penetrate rock. The type A well also includes installation requirements for wells that may be installed in the Lower Marker Bed at the site although none are planned at this time.

- Type B: Deeper monitoring wells that may be installed to a depth below the Lower Marker Bed at the site, although none are planned at this time.

Type A wells involve setting the screened section of the well into the first encountered water and/or to a specified depth using either just hollow-stem auger drilling or a combination of hollow-stem auger drilling and air rotary drilling methods as an alternative the rotosonic drilling method may be used. Type B wells involve setting the screened section of the well into a hydrostratigraphic unit below the anticipated first encountered water (perched water in the Lower Marker Bed) and incorporates the use of hollow-stem auger drilling, air rotary drilling and installation of a casing to prevent co-mingling of waters from separate hydrostratigraphic units. As an alternative the rotosonic drilling method may be used. Drawings of the two well types are provided in Figure 0267-2.

Locations of select alluvial wells are provided in Figure 0267-1. These locations are acceptable for drill rig access and for conformance with the depiction of alluvium in the Record of Decision (ROD) (figure 16). Fifteen wells are recommended as per the SOW; however in the course of attempting to install these wells it may not be possible to install all of the wells at the

recommended locations due to insufficient depth of alluvium; therefore the final number of installed wells may be less than 15.

3.1 PREPARATION

3.1.1 General

The subcontractor shall decontaminate the drill rig and equipment prior to entering the site. The drill rig shall be visually inspected by the Field Geologist to insure that all oil, grease, and hydraulic fluid have been removed from exposed surfaces, all seals and gaskets are intact, and no fluids are leaking.

Plastic sheets shall be placed on the ground and over exposed drilling supplies, and over portions of the drilling equipment which can be protected safely or without limiting access to working parts or control mechanisms.

3.1.2 Air Rotary Drilling, Air Intake, and Discharge Filtration System

If Air Rotary Drilling is required, air intake and discharge filtration systems shall be used as follows:

- The air intake filtration system shall consist of a roughing filter and a multistage coalescing glass fiber filter.

- Rock cuttings generated during the air rotary drilling process shall be routed through a collection and filtration system. This system shall consist of four barrels connected in series, a HEPA filter and suction fan, and a 12-foot high exhaust stack. The larger particulates suspended in the exhaust will be deposited in the first barrel. Some smaller particulates will be deposited in the second barrel. The third barrel shall route the exhaust through a screened section of PVC pipe submerged in a water bath. The fourth barrel will collect suspended water from the third barrel. The exhaust from the fourth barrel shall be routed through roughing filters and a single stage HEPA filter before release from the 12-foot high exhaust stack.

The pressure gauges and the pressure release valves are integral parts of the system.

3.2 DRILLING

Initial drilling, drilling through soils, shale, and thin sandstone beds (where possible), shall be performed using hollow-stem augers or rotosonic drilling. For well installation on the flats, two well types may be installed: Type A and Type B. For well installation at the lower edge of the hillslopes (alluvial or compliance wells) only, Type A wells will be installed. Please note that a minimum depth of 8 feet for a well is required to meet EPA Region IV SOPQAM guidelines.

Descriptions of both well types are given in Subsection 3.3. Drilling shall be initiated using the hollow-stem auger drilling method. When the hollow-stem auger is used and water is first encountered at the desired well depth, a Type A monitoring well (see Section 3.3) shall be installed. If no water is encountered at hollow-stem auger refusal or if auger refusal is at less than 8 feet depth in the Type A alluvial well select location then a second boring will be made 5 feet from the original location. If that is dry or if auger refusal is again encountered at a depth of less than 8 feet then a third hole will be drilled 5 feet away from the second location. If the third location is dry, then a well will be installed in the third location (as long as the alluvium is encountered at a depth of 8 feet or greater). If the base of the alluvium is encountered at a depth of less than 8 feet at the third location then a well will NOT be installed and the location will be abandoned. For other Type A monitoring wells where the intended target formation is the LMB then air rotary drilling shall be used until water is encountered, and a Type A monitoring well shall be installed. Where a perched water layer is encountered in the borehole before the final depth is achieved, then a Type B monitoring well will be installed. For Type B monitoring wells, the hollow-stem auger drilling method is to be used to refusal. If water is encountered, a 5-inch diameter PVC casing will be set and grouted into place. Once the grout has been set, drilling will continue using air rotary drilling to TD, and a Type B monitoring well will be installed. If the rotosonic drilling method is used, then Type A wells shall be installed at the base of the alluvium as determined from examining the drilling cores as long as the depth is greater than 8 feet and water is encountered. If the boring is less than 8 feet or no water is encountered then the same rationale shall apply as in the above description for hollow-stem auguring as the drilling of alternative borings. Similarly for Type B monitoring wells installed using the rotosonic drilling method, the same rationale shall apply as described above concerning placing a casing to seal off any perched water layers to prevent cross-contamination.

3.2.1 Hollow-Stem Auger Drilling

Hollow-Stem Auger Drilling shall be used initially to drill through the soils, shale, and thin sandstone beds. Services and equipment shall be in accordance with ASTM D 1452-80.

3.2.2 Air Rotary Drilling

Following hollow-stem auguring or core drilling air rotary drilling shall be used if necessary to reach the desired depth. Depending upon site conditions the Field Geologist may allow installation of drill rig anchors to permit faster drilling penetration through the rock. Anchors will be place approximately 4 feet on either side of the casing.

The borehole shall be completed by air rotary methods using a 4□-inch drill bit to facilitate installation of the monitoring wells. Before drilling with the air rotary drill, the subcontractor shall connect to a Sentry 2000 or approved equivalent and the filter system specified in Subsection 3.1. The NX wireline core barrel or 4□-inch rotary tools shall be lowered into the PVC casing and the space between the drill rods and the PVC casing shall be sealed with a rubber collar. The Sentry 2000 shall be turned on first then the water injection pump, and finally the air compressor to ensure that the exhaust air is properly filtered. No water shall be introduced into the well during air drilling except during coring operations, or as necessary to free drilling tools locked in the borehole by cuttings.

3.2.3 Rotosonic Drilling

Alternately, rotosonic drilling may be used instead of hollow stem auger or Air Rotary Drilling for the installation of monitoring wells. Rotosonic drilling shall consist of a Versa-Sonic drilling rig or equivalent that utilizes the standard 4-inch sonic core barrel and a 6-inch sonic casing. Drilling through the overburden will be dry (i.e. no water shall be added to the core barrels while drilling through the overburden) so that water-bearing units may be recognized. A continuous core through the overburden material will be collected using a 4-inch rotosonic core barrel until a water-bearing unit is reached or bedrock is encountered. The 6" sonic casing will be installed as the borehole is cored in order to keep the borehole open and to provide enough annular space to install a 2-inch monitoring well through the casing. Once the desired depth is reached, the 4-inch sonic core barrel will be removed. The borehole will be reamed to total depth using the 6-inch sonic casing. Monitoring well installation will then proceed in a manner similar to that used to install a monitoring well through augers as described in section 3.3.1. Additionally, the sonic casing will be vibrated as it is withdrawn during well installation to insure that no bridging of the sand pack occurs.

3.2.3.1 Rotosonic Drilling in Bedrock

Where drilling in bedrock is necessary the rotosonic core barrel will be used to collect continuous cores through the bedrock. Typically, soft bedrock (i.e., siltstone, shale, and sandstone) can be cored using the 4-inch rotosonic core barrel. However, water may have to be added to keep the bit cool and to ensure adequate penetration rates. Drilling through the bedrock will continue until water-bearing fractures are encountered or until directed to stop by the IT site geologist.

3.3 MONITORING WELL INSTALLATION

Specific monitoring well installation requirements for wells are included below.

3.3.1 Type A

<u>Well Screen and Pipe:</u> The well pipe and screen shall be 2-inch diameter, flush jointed, threaded, schedule 5 stainless steel riser pipe and wire wound screen with 0.010-inch slots. Ideally, the well shall be drilled 10 feet below first encounter of water and screened 5 feet above and 10 feet below water line. However, for the alluvial well locations, it is anticipated that groundwater (if present) shall be quite shallow and that the base of the alluvium will average 10 feet. Therefore the well shall be drilled to auger refusal and (if water is present) a 1 to 5 foot long well screen shall be placed (depending on the depth of the well). The actual well screen length will be determined in the field. A 1-foot long screen will be used in wells that are less than 12 feet deep and a 5-foot long screen will be used in wells that are 12 feet deep or greater. A well will not be installed at a location where the alluvium is less than 8 feet thick.

All well materials shall be placed through the hollow-stem augers, sonic core barrel or through a tremie pipe.

Backfill: If the monitoring well boring requires partial backfilling, the well shall be backfilled with clean sand prior to installation of the screen and riser. Backfill depths shall be monitored frequently by means of a weighed steel or plastic tape. The measuring of backfill depths shall be approved by the Field Geologist.

Sand Pack: The annulus of the boring shall be filled with clean sand around the well screen. The sand pack shall be to a minimum depth of 2 feet above the well screen.

Bentonite Seal: A bentonite seal shall be installed above the sand pack. The seal shall be a minimum of 2 feet thick. Bentonite pellets or 3/8-inch chips shall be used to form the seal. The bentonite pellets shall be hydrated using groundwater and allowed to hydrate for 40 minutes or as specified by the manufacturer. If no groundwater is present to hydrate the bentonite pellets, up to 1gallon of organic and radionuclide free water may be added to the well for hydration purposes.

Grout Backfill: The remainder of the well annulus shall be backfilled with a cement/bentonite grout using a tremie pipe. The backfill grout shall be a minimum of 1 foot thick. The well shall be filled to a depth of 2 feet from the ground surface.

Surface Seal: A concrete surface seal shall be placed to a minimum depth of 2 feet from the cement/bentonite seal to the ground surface. A protective steel casing shall be installed around each well as shown on the drawings. Each protective steel casing shall be equipped with a locking cap. Locks shall be supplied by the contractor and shall be keyed alike. Two 3-inch diameter holes shall be drilled at the base of the protective casings to allow water to drain. Three well guards or post protectors shall be installed in a radial pattern around any well located in areas where vehicular traffic may be expected. The well guards shall be placed 3 feet from the well, be driven or cemented in place 2 to 3 feet below the ground surface, and stick up 3 feet from the ground surface. The ground surface around the well shall be grubbed and prepared for concrete placement. A 3-foot x 3-foot x 4-inch thick form shall be placed around the well, and concrete shall be placed in the form. The concrete pad shall slope away from the well and form a contiguous seal with the concrete annulus seal. The concrete work shall meet the specifications in Sections 03100, and 03300.

3.3.2 Type B

Following hollow-stem auger refusal, and assuming that a perched water layer is encountered above auger refusal, the auger shall be completely removed and a 5-inch diameter PVC pipe with a bottom cap shall be placed in the borehole. The PVC casing shall then be filled with approved water to prevent the sealed pipe in place using a cement/bentonite grout seal installed by tremie pipe. A temporary cap shall be placed over the PVC casing to prevent the entry of surface water or precipitation. The bentonite grout seal shall be allowed to set for a minimum of 24 hours. If the rotosonic drilling method is used, then the same principal will be followed to seal off any perched water zones; however an appropriate sized PVC pipe will be used to accommodate the 6" rotosonic core barrel.

After reaching the final depth of the well using the air drilling or rotosonic method, the monitoring well installation shall continue as specified in Subsection 3.3.1.

3.4 WASTE MANAGEMENT

Drilling wastes from each well shall be confined to a minimum number of waste drums, and solid and liquid wastes shall be segregated. Waste containers shall be labeled with the date and source of waste and be transported to an interim waste storage area from the drilling location. The waste drums should be loaded and off-loaded from transport vehicles using a forklift or a truck-mounted loading boom.

Water and cuttings shall be disposed as specified in Section 02050, Demolition and Disposal.

Contaminated pipe or other equipment that cannot be decontaminated shall be disposed in the EMC Bunkers.

3.5 SITE CLEANUP

The drilling area shall be cleaned including removal of all plastic sheeting, scrap material and waste drums.

PART 4 - QUALITY CONTROL

4.1 BORING LOGS

The boring log shall provide the boring designation, location of the boring, drilling equipment used and personnel on site, drilling and sampling depths, amounts and description of grout and annulus material used in the construction of the well, or boring abandonment, depth information, installation date, surface completion information, and a sketch of the completed well. The sketch shall show the screen, riser, filter pack, bentonite seal, and grout, and the corresponding dimensions and depths. The logs will record the drilling method, mud weight, and viscosity. The ground elevation will also be recorded.

- End of Section -

02671-1
2A
3

SECTION 02725

PRINCIPAL SPILLWAY FLOW MEASUREMENT (EAST DETENTION BASIN)

PART 1 - GENERAL

1.1 SCOPE

This section describes the labor, materials, tools, supervision, transportation, and installation equipment necessary for the installation of the principal spillway within the EDB.

1.2 SUBMITTALS

1.2.1 Manufacturer's Literature

Material descriptions and recommended installation instructions from the flume and flowmeter manufacturers shall be submitted for approval prior to shipment of materials to the site.

1.2.2 Manufacturer's Drawings

Drawings shall be submitted for approval prior to shipment of material to the site. The drawings shall include all applicable dimensions, fabrication details, and installation requirements.

PART 2 - PRODUCTS

2.1 H-FLUME

The flume shall be a 4.5-foot H-flume designed to measure discharge flows. The flume shall be a molded structure of fiberglass-reinforced polyester. The interior surface shall have 10 to 15 mils with ultraviolet-resistant gel-coat backed by a rich layer of resin and chopped glass forming a water and chemical resistant surface. The remainder of the laminated shall be fiberglass-reinforced polyester containing not less than 30 percent glass content by weight. The thickness of the walls and floor of the flume shall not be less than ¼ inch; and shall be reinforced with stiffeners down the sides and across the bottom on flumes deeper than 12 inches. The stiffeners shall be joined together at the knee to form a rigid dimensionally stable flume.

The flume shall be provided with anchoring clips fastened along the side of the flume to be used for anchorage to the concrete. Stiffeners made of FRP angle/channel shall be provided across the top of the flume to provide structural support during shipping and installation.

Flume dimensions shall be in accordance with the U.S. Department of Agriculture, Handbook. No. 224.

The flume shall be provided with the following:

- a head gauge calibrated in tenths of a foot, molded into the side of the flume,
- a 2 inch PVC female threaded tap, and
- a bottom cavity for an ISCO pressure transducer or equivalent at the point of measurement indicated on the drawings.

2.2 ULTRASONIC FLOW METER AND ACCESSORIES

2.2.1 Ultrasonic Flow Meter

The open channel flow meter shall use ultrasonic technology with printer and digital data recording capabilities. The Flow meter shall be capable of measuring instantaneous flow and total flow over time when used with weirs, and flumes. The flow meter shall make level to flow rate conversions for V-notch, rectangular, and Cipolletti weirs and Parshall, Palmer-Bowlus, Trapezoidal, H, HS, and HL flumes. The flow meter shall meet the specifications in Table 02725-1.

Table 02725-1

Ultrasonic Flow Meter Specifications

Parameter	Specification
Enclosure	NEMA 4X
Power	12 to 14 V DC 24 mA average at 12.5 V DC
Program Memory	Non-volatile, programmable flash that can be updated via interrogator port
Display	Backlit LCD, 2-line, 80 character
Totalizer	LCD, 9 digit, floating decimal point, resettable
Rain Gauge Input	Contact closure, normally open, 0.01 inch resolution
Data Storage Capacity	80,000 bytes
Operating Temperatures	0° to 140° F
Printer	Up to 3 graphs of level, flow rate, pH, DO, conductivity and temperature versus time
Sensor Range	2 to 12 ft
Sensor Accuracy	±0.02 ft for Head Change <1.0 ft ±0.03 ft for Head change 1 to 10 ft
Sensor Operating Temperature	-22° to 140° F

2.2.2 Battery Backed Power Pack

The power pack shall be ISCO Model 914 or equivalent that converts 120 V AC to 12 V DC backed by a nickel-cadmium battery

2.2.3 Rain Gauge

The rain gauge shall be a ISCO Model 674 or equivalent tipping bucket rain gauge with a 0.01 inch tip point. The rain gauge shall also have a 50-foot connecting cable.

2.2.4 Connect Cable

A connect cable shall be supplied for downloading data from an ultrasonic flow meter to a portable PC.

2.2.5 Software

Flowlink® 4 software or equivalent shall be purchased by the Contractor and issued to the Commonwealth of Kentucky. The software shall be used to set up and retrieve data from the ultrasonic flow logger. Data can be downloaded using a connect cable and notebook or desktop PC.

PART 3 - EXECUTION

The H-flume and flow meter shall be installed in the sequence specified in Section 02300 EARTHWORK, Subsection 3.3.2.1.

The flow meter and H-flume shall be installed in accordance with manufacturer instructions.

If the H-flume is shipped in two parts, the 2-inch flanges shall be caulked with silicone caulk and assembled using the nuts and bolts provided by the manufacturer. Any excess silicone shall be removed from inside the flume. The caulk shall cure before setting the flume in place as shown on the drawings.

The assembled H-flume shall be installed by leveling from the inlet to the outlet and side-to-side. The walls shall remain vertically plumb. The poured channel shall be oversized and the H-flume grouted in place after the first pour has set. The flume shall be braced internally when backfilling to prevent bulging when concrete is poured. Sandbags shall be placed as necessary to prevent the H-flume from floating in the wet concrete. Vibrating compactors shall not be used near the H-flume.

- End of Section -

SECTION 02831

CHAIN LINK FENCE

PART 1 - GENERAL

1.1 WORK INCLUDED

This section includes the requirements for the materials and installation of the perimeter fence for the Restricted Area. The fence and gate layout and details are included in the drawings.

1.2 SUBMITTALS

A statement signed by an official authorized to certify on behalf of the manufacturer attesting that the chain link fence and component materials meet the specified requirements.

PART 2 - PRODUCTS

2.1 MATERIALS

Materials shall conform to the following:

2.1.1 Chain Link Fence Fabric

Fence fabric shall meet ASTM A 392, Class 1, zinc-coated steel wire with minimum coating weight of 1.2 ounces of zinc per square foot of coated surface, or ASTM A 491, Type I, aluminum-coated steel wire. Fabric shall be fabricated of 9 gauge wire woven in 2 inch mesh. Fabric height shall be 6 feet. Fabric shall be twisted and barbed on the top selvage and knuckled on the bottom selvage.

2.1.2 Gates

Gates shall be the type and shall swing as shown on the drawings. Swing gates shall meet ASTM F 900. Gate frames shall conform to strength and coating requirements of ASTM F 1083 for Group IA, steel pipe, with external coating Type A, nominal pipe size (NPS) 1-1/2 or to strength and coating requirements of ASTM F 1043, for Group IC, steel pipe with external coating Type A or Type B, NPS 1-1/2 inches. Gate fabric shall be as specified for chain-link fabric. Each end member of gate frames shall be extended sufficiently above the top member to carry three strands of barbed wire in horizontal alignment with barbed wire strands on the fence. Gate leaves more than 8 feet wide shall have either intermediate members and diagonal truss rods or shall have tubular members as necessary to provide rigid construction, free from sag or twist. Gate leaves less than 8 feet wide shall have truss rods or intermediate braces. Intermediate braces shall be provided on all gate frames with an electro-mechanical lock. Gate fabric shall be attached to the gate frame by method standard with the manufacturer except that welding will not be permitted. Latches, hinges, stops, keepers, rollers, and other hardware items shall be furnished as required for the operation of the gate. Latches shall be arranged for padlocking so that the padlock will be

accessible from both sides of the gate. Stops shall be provided for holding the gates in the open position.

2.1.3 Posts

Posts shall meet ASTM F 1083, zinc-coated, Group IA, with external coating Type A steel pipe or Group IC steel pipe, zinc-coated with external coating Type A or Type B and Group II, formed steel sections, shall meet the strength and coating requirements of ASTM F 1043. Group III, ASTM F 1043 steel H-section may be used for line posts in lieu of line post shapes specified for the other classes. Sizes shall be as shown on the drawings. Line posts and terminal (corner, gate, and pull) posts selected shall be of the same designation throughout the fence. Gatepost shall be for the gate type specified subject to the limitation specified in ASTM F 900.

2.1.4 Braces and Rails

Braces and rails shall meet ASTM F 1083, zinc-coated, Group IA, steel pipe, size NPS 1-1/4 inches. Group IC steel pipe, zinc-coated, shall meet the strength and coating requirements of ASTM F 1043. Group II, formed steel sections, size 1.66 inch, conforming to ASTM F 1043, may be used as braces and rails if Group II line posts are furnished.

2.1.5 Tension Wire

Tension wire shall be Type I or Type II, Class 2 coating, in accordance with ASTM A 824.

2.1.6 Accessories

Ferrous accessories shall be zinc or aluminum coated and meet ASTM F 626. Truss rods shall be furnished for each terminal post. Truss rods shall be provided with turnbuckles or other equivalent provisions for adjustment. Barbed wire shall be 2 strand, 12-1/2 gauge wire, zinc-coated, Class 3 in accordance with ASTM A 121 or aluminum coated Type I in accordance with ASTM A 585. Barbed wire material should be consistent with the fence fabric material. Barbed wire shall be four-point barbed type steel wire. Barbed wire support arms shall be the single arm type and of the design required for the post furnished. Tie wire for attaching fabric to rails, braces, and posts shall be 9 gauge steel wire and match the coating of the fence fabric. Miscellaneous hardware coatings shall conform to ASTM A 153 unless modified herein.

2.1.7 Concrete

Concrete shall conform to ASTM C 94, using 3/4-inch maximum size aggregate, and having minimum compressive strength of 3000 psi at 28 days. Grout shall consist of one part Portland cement to three parts clean, well-graded sand and the minimum amount of water to produce a workable mix.

2.1.8 Padlocks

Padlocks shall conform to ASTM F 883, Type PO1, Grade 2, Size 1-3/4 inch. Padlocks shall be keyed alike and each lock shall be furnished with two keys.

PART 3 - EXECUTION

3.1 GENERAL

Fence shall be installed to the lines and grades indicated. The area on either side of the fence line shall be cleared as shown on the drawings. Line posts shall be spaced equidistant at intervals not exceeding 10 feet. Terminal (corner, gate, and pull) posts shall be set at abrupt changes in vertical and horizontal alignment. Fabric shall be continuous between terminal posts; however, runs between terminal posts shall not exceed 500 feet. Any damage to galvanized surfaces, including welding, shall be repaired with paint containing zinc dust in accordance with ASTM A 780.

3.2 EXCAVATION

Postholes shall be cleared of loose material. Waste material shall be spread where directed. The ground surface irregularities along the fence line shall be eliminated to the extent necessary to maintain a 2-inch clearance between the bottom of the fabric and finish grade.

3.3 POSTS

Posts shall be set plumb and in alignment. Except where solid rock is encountered, posts shall be set in concrete to the depth indicated on the drawings. Where solid rock is encountered with no overburden, posts shall be set to a minimum depth of 18 inches in rock. Where solid rock is covered with an overburden of soil or loose rock, posts shall be set to the minimum depth indicated on the drawing unless a penetration of 18 inches in solid rock is achieved before reaching the indicated depth, in which case depth of penetration shall terminate. All portions of posts set in rock shall be grouted. Portions of posts not set in rock shall be set in concrete from the rock to ground level. Posts set in concrete shall be set in holes not less than the diameter shown on the drawings. Diameters of holes in solid rock shall be at least 1 inch greater than the largest cross section of the post. Concrete and grout shall be thoroughly consolidated around each post, shall be free of voids and finished to form a dome. Concrete and grout shall be allowed to cure for 72 hours prior to attachment of any item to the posts. Group II line posts may be mechanically driven, for temporary fence construction only, if rock is not encountered. Driven posts shall be set to a minimum depth of 3 feet and shall be protected with drive caps when being set.

3.4 RAILS

3.4.1 Top Rail

Top rails shall be supported at each post to form a continuous brace between terminal posts. Where required, sections of top rail shall be joined using sleeves or couplings that will allow expansion or contraction of the rail.

3.5 BRACES AND TRUSS RODS

Braces and truss rods shall be installed as indicated and in conformance with the standard practice for the fence furnished. Braces and truss rods shall extend from terminal posts to line posts. Diagonal braces shall form an angle of approximately 40 to 50 degrees with the horizontal. No bracing is required on fences 6 feet high or less if a top rail is installed.

3.6 TENSION WIRES

Tension wires shall be installed along the bottom of the fence line and attached to the terminal posts of each stretch of the fence. Bottom tension wire shall be installed within the bottom 6 inches of the installed fabric. Tension wire shall be pulled taut and shall be free of sag.

3.7 CHAIN LINK FABRIC

Chain link fabric shall be installed on the side of the post indicated. Fabric shall be attached to terminal posts with stretcher bars and tension bands. Bands shall be spaced at approximately 15-inch intervals. The fabric shall be installed and pulled taut to provide a smooth and uniform appearance free from sag, without permanently distorting the fabric diamond or reducing the fabric height. Fabric shall be fastened to line posts at approximately 15-inch intervals and fastened to all rails and tension wires at approximately 24-inch intervals. Untwisting and removing pickets shall cut fabric. Splicing shall be accomplished by weaving a single picket into the ends of the rolls to be joined. The bottom of the installed fabric shall be 2 inches (plus or minus ½ inch) above the ground. After the fabric installation is complete, the fabric shall be exercised by applying a 50-pound push-pull force at the center of the fabric between posts.

3.8 BARBED WIRE SUPPORTING ARMS AND BARBED WIRE

Barbed wire supporting arms and barbed wire shall be installed as indicated and as recommended by the manufacturer. Supporting arms shall be anchored to the posts in a manner to prevent easy removal with hand tools. Barbed wire shall be pulled taut and attached to the arms with clips or other means that will prevent easy removal.

3.9 GATES

Gates shall be installed at the locations shown. Hinged gates shall be mounted to swing as indicated. Latches, stops, and keepers shall be installed as required. Padlocks shall be attached to gates or gateposts with chains. Hinge pins and hardware shall be welded or otherwise secured to prevent removal.

3.10 GROUNDING

Fences shall be grounded on each side of all gates, at each corner, at the closest approach to each building located within 50 feet of the fence, and where the fence alignment changes more than 15 degrees. Grounding locations shall not exceed 650 feet. Each gate panel shall be bonded with a flexible bond strap to its gatepost. Ground conductor shall consist of No. 4 AWG solid copper wire. Grounding electrodes shall be 3/4 inch by 10-foot long copper-clad steel rod. Electrodes

shall be driven into the earth so that the top of the electrode is at least 6 inches below the grade. Where driving is impracticable, electrodes shall be buried a minimum of 12 inches deep and radially from the fence. The top of the electrode shall be not less than 2 feet or more than 8 feet from the fence. Ground conductor shall be clamped to the fence and electrodes with bronze grounding clamps to create electrical continuity between fence posts, fence fabric, and ground rods. After installation the total resistance of fence to ground shall not be greater than 25 ohms.

- End of Section -

SECTION 02935

TURF

PART 1 - GENERAL

1.1 WORK INCLUDED

This section describes the requirements for establishing an acceptable turf.

1.2 SUBMITTALS

1.2.1 Manufacturer's Literature

Manufacturer's literature discussing physical characteristics, application and installation instructions for erosion control material, and for chemical treatment materials.

1.2.2 Maintenance Report

A written record of maintenance work performed shall be submitted to IT.

1.2.3 Turf Establishment Period

A written calendar time period for the turf establishment period shall be submitted to the Field Engineer. When more than one turf establishment period is necessary, the boundaries of the turfed area covered for each period shall be described.

1.2.4 Seed

Documentation of the seed mixture used, percent pure live seed, minimum percent germination and hard seed, maximum percent weed seed content, date tested, and state certification shall be submitted to IT.

1.2.5 Sod

Documentation of the species, mixture percentage, percent purity, and field location shall be submitted to IT.

1.2.6 Fertilizer

The chemical analysis and composition documentation of the fertilizer shall be submitted to IT.

1.2.7 Lime

The documentation of the calcium carbonate equivalent and sieve analysis for the lime shall be submitted to IT.

1.3 DELIVERY, INSPECTION, STORAGE, AND HANDLING

1.3.1 Soil Amendments

Soil amendments shall be delivered to the site in the original, unopened containers bearing the manufacturers chemical analysis. In lieu of containers, soil amendments may be furnished in bulk. A chemical analysis shall be provided for bulk deliveries.

1.3.2 Inspection

Seed shall be inspected upon arrival at the job site by the Field Engineer for conformity to type and quality in accordance with paragraph 2.1, Seed. Other material shall be inspected for meeting specified requirements and unacceptable materials shall be removed from the job site.

1.3.3 Storage

Material shall be stored in areas designated by the Field Engineer. Seed, lime, and fertilizer shall be stored in cool, dry locations away from contaminants.

PART 2 - PRODUCTS

2.1 Seed

2.1.1 Seed Classification

State-approved seed of the latest seasons crop shall be provided in original sealed packages bearing the producers guaranteed analysis for percentages of mixture, purity, germination, hard see, weed seed content, and inert material. Labels shall be in conformance with applicable state seed laws.

2.1.2 Seed Mixtures

Seed mixtures shall be as follows: Kentucky 31 Tall Fescue, Annual Rye Grass, Perennial Rye Grass, Birdsfoot Trefoil, and Crown Vetch.

2.1.3 Quality

Weed seed shall not exceed 1 percent by weight of the total mixture. Wet, moldy, or otherwise damaged seed shall not be used.

2.1.4 Temporary Seed

The temporary seed for erosion control shall be Ryegrass.

2.1.5 Seed Mixing

The field mixing of seed shall be performed on site in the presence of the Field Engineer.

2.2 SOD

2.2.1 Grass Species

Grass species shall be tall fescue of Kentucky bluegrass.

2.2.2 Quality

Each individual sod section shall be of a size to permit rolling and lifting without breaking. The sod shall be relatively free of thatch, diseases, nematodes, soil-borne insects, weeds or undesirable plants, stones larger than 2 inches in any dimension, woody plat roots and other material detrimental to a healthy stand of turf. Sod that has become dry, moldy, or yellow from heating, or has irregularly shaped pieces of sod and torn or uneven ends shall be rejected.

2.2.3 Thickness

Sod shall be machine cut to a uniform thickness of 1¼ inches within a tolerance of ¼ inch, excluding top growth and thatch. Measurement of thickness shall exclude top growth and thatch.

2.2.4 Anchors

Sod anchors shall be as recommended by the sod supplier.

2.3 SOIL AMENDMENTS

Soil amendments shall consist of lime and fertilizer meeting the following requirements.

2.3.1 Lime

Lime shall be agricultural limestone and shall have a minimum calcium carbonate equivalent of 90 percent and shall be ground to such fineness that at least 90 percent will pass a 10-mesh sieve and at least 50 percent will pass a 60-mesh sieve.

2.3.1.1 Liquid Lime

Liquid lime as recommended by Hydroseed contractor and approved by the Design Engineer.

2.3.2 Fertilizer

Fertilizer shall be commercial grade, free flowing, uniform in composition and conform to CID A-A-1909. Typical granular fertilizer shall consist of a nitrogen-phosphorous-potassium ratio of 10 percent nitrogen, 10 percent phosphorus, and 10 percent potassium.

2.3.3 Bio-Stimulant Soil Conditioner

Bio-Stimulant Soil Conditioner as recommended by Hydroseed contractor and approved by Design Engineer.

2.4 MULCH

Mulch shall be fee from weeds, mold, and other deleterious materials.

2.4.1 Straw

Straw shall be stalks from oats, wheat, rye, barley, or rice furnished in air-dry condition and with a consistency for placing with commercial mulch-blowing equipment.

2.4.2 Wood Cellulose Fiber

Wood cellulose fiber shall not contain any growth or germination-inhibiting factors and shall be dyed an appropriate color to facilitate visual metering during application.

2.4.2.1 Tackifier

Tackifier as recommended by Hydroseed contractor and approved by Design Engineer.

2.4.3 Wood Chips

Wood chips shall be chips or shredded bark with a maximum particle size of 3/16 inch.

2.5 EROSION CONTROL MATERIAL

Soil erosion control shall conform to the following:

2.5.1 Soil Erosion Control Blanket

Soil erosion control blankets shall be a machine produced mat of wood excelsior formed from a web of interlocking wood fibers, covered on one side with either knitted straw blanket-like mat construction, covered with biodegradable plastic mesh, or interwoven biodegradable thread, plastic netting or twisted craft paper cord netting.

2.5.2 Soil Erosion Control Fabric

Soil erosion control fabric shall be a knitted construction of polypropylene yarn with uniform mesh openings ¾ to 1 inch square with strips of biodegradable paper. Filler paper strips shall last 6 to 8 months.

2.5.3 Soil Erosion Control Net

Soil erosion net shall consist of heavy, twisted jute mesh weighing approximately 1.22 pounds per linear yard and 4 feet wide with mesh openings of approximately 1 inch square.

2.5.4 Anchors

Erosion control anchor material shall be as recommended by the manufacturer.

PART 3 - EXECUTION

3.1 SEEDING AND SODDING CONDITIONS

3.1.1 Seeding Time

Seed shall be sown from March 1 to May 15 for spring planting and from August 1 to October 15 for fall planting unless prior approval is given in writing by the Design Engineer. When weather and soil conditions are suitable, the Design Engineer shall be notified a minimum of 24 hours prior to seeding operation.

3.1.2 Sodding Time

Sod shall be placed from March 1 to June 15 for spring planting and from September 1 to October 15 for fall planting.

3.1.3 Seeding and Sodding Conditions

Seeding operations shall be performed only during periods when beneficial results can be obtained. When drought, excessive moisture, or other unsatisfactory conditions prevail, the work shall be stopped when directed. When special conditions warrant a variance to the seeding operations, proposed times shall be submitted and approved.

3.2 SITE PREPARATION

3.2.1 Earthwork

Approved finished grades, placing of topsoil, and smooth grading as specified in 02300, Earthwork shall be completed prior to seeding operations.

3.2.2 Application of Soil Amendments

3.2.2.1 Lime

Lime shall be applied at the rate of 3 tons per acre. Lime shall be incorporated as part of the tillage operation.

3.2.2.2 Fertilizer

Fertilizer shall be applied at the rate of 1,200 pounds per acre. Fertilizer shall be incorporated as part of the tillage or hydroseeding operation.

3.2.3 Tillage

Soil on slopes gentler than 3-horizontal to 1-vertical shall be tilled to a minimum depth of 4 inches. On slopes between 3-horizontal to 1-vertical and 1-horizontal to 1-vertical, the soil shall be tilled to a minimum depth of 2 inches by scarifying with heavy rakes, or other method. Rototillers shall be used where soil conditions and length of soil permit. On slopes 1-horizontal to 1-vertical and steeper, no tillage is required.

3.2.4 Finished Grading

3.2.4.1 Preparation

Seed areas shall be filled as needed or have surplus soil removed to attain the finished grade. Drainage patterns shall be maintained as indicated on the drawings. Seed areas compacted by construction operations shall be completely pulverized by tillage. Soil used for repair of erosion or grade deficiencies shall conform to topsoil requirements specified in Section 02300, Earthwork. Finished grade shall be 1 inch below the adjoining grade of any surfaced area. New surfaces shall be blended to existing areas.

3.2.4.2 Debris

Debris and stones larger than 3 inches in any dimension shall be removed from the surface.

3.2.4.3 Protection

Finished graded areas shall be protected form damage by vehicular or pedestrian traffic and erosion.

3.3 SEEDING

3.3.1 Seeding Conditions

Prior to seeding, any previously prepared seed bed areas compacted or damaged by interim ran, traffic, or other cause, shall be reworked to restore the ground condition previously specified. Seeding operations shall not take place when the wind velocity will prevent uniform seed distribution.

3.3.2 Applying Seed

Seed shall be applied by hydroseeding or broadcast seeding in areas not suitable for hydroseeding.

3.3.2.1 Hydroseeding

Seed and fertilizer shall be added to water and thoroughly mixed at the rates specified. Wood cellulose fiber mulch shall be added at the rates recommended by the manufacturer after the seed, fertilizer, and water have been thoroughly mixed, to produce a homogeneous slurry. Slurry shall

be uniformly applied under pressure over the entire area. The hydroseeded area shall not be rolled. The typical hydroseeding mix per acre shall be as follows:

300 lbs Kentucky 31 Tall Fescue
20 lbs Annual Rye Grass
20 lbs Perennial Rye Grass
15 lbs Birdsfoot Trefoil
600 lbs 19-19-19 Fertilizer
15 gal Liquid Lime
1,200 lbs Fiber Mulch
Bio-Stimulant Soil Conditioner and Organic Tackifier per manufacturer recommendation.

To minimize the required mowing of the sideslopes along the borrow pit area and miscellaneous areas, as identified by the Design Engineer, a Hydroseed mix utilizing Crown Vetch and Annual Rye along with applicable Hydroseed mix soil amendments shall be applied. Approval of changes to the above Hydroseed mixes and final mix design shall be by the Design Engineer.

3.3.2.2 Broadcast Seeding

Seed shall be uniformly broadcast at the rate of 25 pounds of seed per acre using broadcast seeders. Half of the seed shall be broadcast in one direction, and the remainder at right angles to the first direction. Seed shall be covered to an average depth of ¼ inch by disk harrow, steel mat drag, cultipacker, or other approved device.

3.3.3 Mulch

3.3.3.1 Straw or Hay Mulch

Straw or hay mulch shall be spread uniformly at the rate of 2 tons per acre. Mulch shall be spread by hand, blower-type mulch spreader, or other approved method. Mulching shall be started on the windward side of relatively flat areas or on the upper part of a steep slope and continued uniformly until the area is covered. The mulch shall not be bunched. All seeded areas shall be mulched on the same day as the seeding.

3.3.3.2 Mechanically Anchoring

Immediately following spreading, the mulch shall be anchored to the soil by a V-type-wheel land packer, a scalloped-disk land packer, designed to force mulch into the soil surface, or other suitable equipment.

3.3.3.3 Wood Cellulose Fiber

Wood cellulose fiber mulch for use with the hydraulic application of seed and fertilizer shall be applied as part of the hydroseeding operation.

3.3.4 Water

Watering shall be started within 7 days after completing the seeded area. Water shall be applied at a rate sufficient to ensure moist soil conditions to a minimum depth of 1 inch. Run-off and puddling shall be prevented.

3.4 SODDING

3.4.1 General

Areas shall be sodded as indicated. Adequate soil moisture shall be ensured prior to sodding by spraying water on the area to be sodded and wetting the soil to a minimum depth of 1 inch.

3.4.2 Placing Sod

Rows of sod shall be placed parallel to and tightly against each other. Joints shall be staggered laterally. The sod strips shall not be stretched or overlapped. All joints shall be butted tight. Voids and air drying of roots shall be prevented. On long slopes, sod shall be laid at right angles to slopes. In ditches, sod shall be laid at right angles to the flow of water. When required, the sod shall be anchored by placing anchors a minimum distance of 2 feet on center with a minimum of 2 anchors per sod section.

3.4.3 Finishing

Air pockets shall be eliminated and a true and even surface shall be provided by tamping or rolling the sod in place. Displacement of the sod shall be assured by knitting of sod to the soil. Frayed edges shall be trimmed and holes or missing corners shall be patched in the sod.

3.4.4 Watering Sod

Watering shall be started immediately after completing each day of sodding. Water shall be applied at a rate sufficient to ensure moist soil conditions to a minimum depth of 1 inch. Run-off and puddling shall be prevented.

3.5 EROSION CONTROL

3.5.1 Erosion Control Material

Erosion control material, where indicated or required, shall be installed in accordance with manufacturer instructions. Placement of the erosion control material shall be accomplished without damage to installed material or without deviation to finished grade.

3.5.2 Temporary Turf Cover

3.5.2.1 General

When there are contract delays in the turfing operation or a quick cover is required to prevent erosion, the areas designated for turf shall be seeded with a temporary seed as directed by the Field Engineer.

3.5.2.2 Application

When no other turfing materials have been applied, the quantity of one half of the required soil amendments shall be applied and the area tilled in accordance with paragraph 3.2, Site Preparation. Seed shall be uniformly broadcast and applied at the rate of 20 pounds per acre. The area shall be watered as required.

3.6 RESTORATION AND CLEAN UP

3.6.1 Restoration

Existing turf areas, pavements and facilities damaged from the seeding operation shall be restored to original condition at Contractor's expense.

3.6.2 Clean Up

Excess and waste material shall be removed from the planting operation and shall be disposed of off site. Adjacent paved areas shall be cleaned.

3.7 PROTECTION OF TURFED AREAS

Immediately after seeding, the area shall be protected against traffic or other use by erecting barricades and providing signage as required, or as directed.

3.8 TURF ESTABLISHMENT PERIOD

3.8.1 Commencement

The Turf Establishment Period for establishing a healthy stand of turf shall begin on the first day of work under this contract and shall end 1 year after the last day of turfing operations required by this contract. Written calendar time period shall be furnished to IT for the Turf Establishment Period. When more than one turf establishment period is necessary, describe the boundaries of the turfed area covered for each period.

3.8.2 Satisfactory Stand of Turf

A satisfactory stand of turf from the seeding operation is defined as a minimum of 10 grass plants per square foot. The total bare spots shall not exceed 2 percent of the total seeded area.

3.8.3 Maintenance During Establishment Period

Maintenance of the turfed areas shall include eradicating weeds, eradicating insects and diseases, protecting embankments and ditches from erosion, maintaining erosion control materials and mulch, and protecting turfed areas from traffic.

3.8.4 Repair

The Contractor shall re-establish as specified herein, eroded, damaged or barren areas. Mulch shall also be repaired or replaced as required.

3.8.5 Maintenance Report

A written record shall be furnished to IT of the maintenance work performed.

3.9 FINAL ACCEPTANCE

3.9.1 Preliminary Inspection

Prior to the completion of the Turf Establishment Period, a preliminary inspection shall be held by the Field Engineer at a time established in writing. The acceptability of the turf in accordance with the Turf Establishment Period shall be determined. An unacceptable stand of turf shall be repaired as soon as turfing conditions permit.

3.9.2 Final Inspection

A final inspection shall be held by IT to determine that deficiencies noted in the preliminary inspection have been corrected. The time for the inspection shall be established in writing.

- End of Section -

SECTION 03100

CONCRETE FORMWORK

PART 1 - GENERAL

1.1 WORK INCLUDED

This section includes the specification for the formwork required for the emergency spillway, principal spillway, headwalls and other appurtenant item to be constructed at MFDS.

1.2 FORMWORK DESIGN

Formwork shall be designed in accordance with the methodology of ACI 347R for anticipated loads, lateral pressures, and stresses. Forms shall be capable of producing a surface which meets the requirements of the class and finish specified in Section 03300, CONCRETE. Forms shall be capable of withstanding the pressures resulting from placement and vibration of concrete.

PART 2 - PRODUCTS

2.1 FORM MATERIAL

2.1.1 Forms

Forms for finished surfaces shall be plywood panels or concrete form panels. Other form materials or liners may be used provided the smoothness and appearance of concrete produced will be equivalent to that produced by the plywood concrete form panels.

2.1.2 Form Ties

Form ties shall be fabricated metal ties, shall be of the removable, internal disconnecting, or snap-off type; shall be of a design that will not permit form deflection, and shall not spall concrete upon removal. Solid backing shall be provided for each tie. Except where removable tie rods are used, ties shall not leave holes in the concrete surface less than ¼ inch nor more than 1 inch deep and not more than 1 inch in diameter. Removable tie rods shall not exceed 1½ inches in diameter.

2.1.3 Form Releasing Agents

Form releasing agents shall be commercial formulations that will not bond with concrete surfaces. Especially, agents shall not impair subsequent treatment of concrete surfaces for waterproofing which depends upon bond or adhesion nor impede the wetting of surfaces to be cured with water or curing compounds.

PART 3 - EXECUTION

3.1 INSTALLATION

3.1.1 Formwork

Forms shall be mortar tight, properly aligned and adequately supported to produce concrete surfaces meeting the surface requirements specified in Section 03300 CONCRETE. Forms shall meet the requirements of ACI codes with regard to alignment. Where forms for continuous surfaces are placed in successive units, care shall be taken to fit the forms over the completed surface to obtain accurate alignment of the surface and to prevent leakage of mortar. Forms shall not be reused if there is evidence of surface wear and tear or defects which would impair the quality of the surface. Surfaces of forms to be reused shall be cleaned of mortar from previous concreting and of all other foreign material before reuse.

3.2 CHAMFERING

Except as otherwise shown on the drawings, external corners that will be exposed shall be chamfered, beveled, or rounded ¾ inch by moldings placed in the forms.

3.3 REMOVAL OF FORMS

Forms shall be removed in a manner that will prevent injury to the concrete and ensure the complete safety of the structure. Form work for walls and other parts not supporting the weight of concrete may be removed when the concrete has attained sufficient strength to resist damage form the removal operation but not before at least 24 hours has elapsed since concrete placement. Supporting forms and shores shall not be removed until the structural units are strong enough to carry their own weight and any other construction or natural loads.

- End of Section -

SECTION 03200

CONCRETE REINFORCEMENT

PART 1 - GENERAL

1.1 SUMMARY

This section includes specifications for concrete reinforcement for the headwalls and other appurtenant items to be constructed at MFDS.

1.2 SUBMITTALS

1.2.1 Reinforcing Steel Certificates

The Contractor shall submit certified copies of mill reports attesting that the reinforcing steel furnished meets the requirements specified, prior to the installation of reinforcing steel.

1.3 DELIVERY AND STORAGE

Reinforcement and accessories shall be stored off the ground on platforms, skids, or other supports.

PART 2 - PRODUCTS

2.1 REINFORCING STEEL

Reinforcing steel shall be deformed bars conforming to ASTM A 615, grade 60 and sizes as indicated on drawings.

2.2 WIRE TIES

Wire ties shall be 16 gauge or heavier annealed steel wire.

2.3 SUPPORTS

Bar supports for formed surfaces shall be designed and fabricated in accordance with CRSI MSP-1 and shall be steel. Where concrete formed surfaces will be exposed to weather or where surfaces are to be painted, steel supports within ½ inch of concrete surface shall be galvanized, plastic protected, or stainless steel. For slabs on grade, supports shall be plastic coated steel fabricated with bearing plates, or specifically designed wire-fabric supports fabricated of plastic or precast concrete blocks for bottom face bar support.

PART 3 - EXECUTION

3.1 REINFORCEMENT

Reinforcement shall be fabricated to shapes and dimensions shown and shall conform to the requirements of ACI 318/318R. Reinforcement shall be cold bent unless otherwise authorized. Bending may be accomplished in the field or at the mill. Bars shall not be bent after embedment in concrete. Safety caps shall be placed on all exposed ends of vertical concrete reinforcement bars that pose a danger to life safety. Wire tie ends shall face away from the forms.

3.1.1 Placement

Reinforcement shall be free from loose rust and scale, dirt, oil, or other deleterious coating that could reduce bond with the concrete. Reinforcement shall be placed in accordance with ACI 318/318R at locations shown plus or minus one bar diameter. Reinforcement shall not be continuous through expansion joints and shall be as indicated through construction or contraction joints. Concrete coverage shall be as indicated or as required by ACI 318/318R. If bars are moved more than one bar diameter to avoid interference with other reinforcement, conduits or embedded items, the resulting arrangement of bars, including additional bars required to meet structural requirements, shall be approved before concrete is placed. All bars shall be placed with a 3-inch minimum clear distance between face of bar and an unformed surface, unless noted on drawings.

3.1.2 Splicing

Splices of reinforcement shall conform to ACI 318/318R and shall be made only as required or indicated. Splicing shall be by lapping or by mechanical or welded butt connection; except that lap splices shall not be used for bars larger than No. 11 unless otherwise indicated. Welding shall conform to AWS D1.4 when approved by Field Engineer. Welded butt splices shall be full penetration butt welds. Dowel bar substitution products and butt splices shall develop 125 percent of the specified minimum yield tensile strength of the spliced bars or of the smaller bar in transition splices. Bars shall be flame dried before butt splicing. Adequate jigs and clamps or other devices shall be provided to support, align, and hold the longitudinal centerline of the bars to be butt spliced in a straight line. Threaded female ends of mechanical connectors shall be capped with plastic plugs to prevent the infiltration of fresh concrete or other foreign material. Threaded male ends of bars or mechanical connectors shall be protected to prevent fouling or damage to the threads.

- End of Section -

SECTION 03300

CONCRETE

PART 1 - GENERAL

1.1 SUMMARY

This section includes specifications for concrete headwalls and other appurtenant items to be constructed at MFDS.

1.2 SUBMITTALS

1.2.1 Proportions of Mix

The results of manufacturers trial mix design along with a statement giving the proportions of all ingredients that will be used in the manufacture of each strength of concrete, shall be submitted 14 days prior to commencing concrete placing operations. No substitutions shall be made in the materials used in the work without additional tests to show that the quality of the concrete is satisfactory. Additional requirements for the proportions of the mix are included in 1.4.

1.3 GENERAL REQUIREMENTS

Tolerances for concrete construction and materials shall be in accordance with ACI 117. All concrete shall be furnished and delivered as ready-mixed concrete in accordance with ASTM C94.

1.3.1 Strength Requirements

Structural concrete for all work shall have a minimum 28-day compressive strength of 3,000 psi.

1.3.2 Air Entrainment

Concrete in all structures shall contain from 4 to 7 percent total air.

1.3.3 Special Properties

Concrete may contain other admixtures, such as water reducers, super plasticizers, or set retarding agents to provide special properties to the concrete, if approved in writing. Calcium chloride shall not be used in any amount.

1.3.4 Slump

The concrete shall have a slump of 2 to 4 inches before the admixture is added and a maximum slump of 8 inches at the point of delivery after the admixture is added.

1.4 PROPORTIONS OF MIX

1.4.1 Mixture Proportioning, Normal Weight Concrete

The mix shall be designed in accordance with ACI 211.1. During actual concreting operations, no substitutions shall be made in the materials or proportions which were used in the mix design studies without additional tests as required for original mix design studies, except as specifically approved or directed.

1.4.2 Average Strength

In meeting strength requirements specified, the selected mixture proportion shall produce an average compressive strength exceeding the specified strength by the amount indicated below. Test records from which a standard deviation is calculated shall represent materials, quality control procedures, and conditions similar to those expected; shall represent concrete produced to meet a specified strength or strengths within 1000 psi of that specified for proposed work; and shall consist of at least 30 consecutive tests. A strength test shall be the average of the strengths of two cylinders made from the same sample of concrete and tested at 28 days or at another test age designated for determination of the specified strength.

1.4.2.1 Test Records Exceeding 29

Required average compressive strength used as the basis for selection of concrete proportions shall be the larger of the specified strength plus the standard deviation multiplied by 1.34 or the specified strength plus the standard deviation multiplied by 2.33 minus 500.

1.4.2.2 Test Records Less Than 29

Where a concrete production facility does not have test records meeting the above requirements but does have a record base on 15 to 29 consecutive tests, a standard deviation may be established as the product of the calculated standard deviation and a modification factor from the following table:

Number of Tests[1]	Modification Factor for Standard Deviation
Less than 15	See note
15	1.16
20	1.08
25	1.03
30 or more	1.00

[1]Interpolate for intermediate numbers of tests.

When a concrete production facility does not have field strength test records for calculation of standard deviation or the number of tests is less than 15, the required average strength shall be:

a. The specified strength plus 1,000 for specified strength of less than 3,000 psi.
b. The specified strength plus 1,200 for specified strengths of 3,000 to 5,000 psi.
c. The specified strength plus 1,400 for specified strengths greater than 5,000 psi.

1.5 STORAGE OF MATERIALS

Cement and pozzolan shall be stored in weather-tight buildings, bins, or silos which will exclude moisture and contaminants. Aggregate stockpiles shall be arranged and used in a manner to avoid excessive segregation and to prevent contamination with other materials or with other sizes of aggregates. Other materials shall be stored in such a manner as to avoid contamination and deterioration. Admixtures which have been in storage at the project site for longer than 6 months or which have been subjected to freezing shall not be used unless retested and proven to meet the specified requirements.

PART 2 - PRODUCTS

2.1 ADMIXTURES

Admixtures shall conform to the following:

2.1.1 Air-Entraining Admixture

ASTM C 260.

2.1.2 Chemical Admixtures

ASTM C494, Type A - Water Reducing, Type B - Retarding, Type C - Accelerating, Type D - Water Reducing and Retarding, Type E - Water Reducing and Accelerating, and contain not more than 0.1% chloride ions.

2.2 CEMENTITIOUS MATERIALS

Cementitious materials shall conform to ASTM C 150, Type I (normal) or Type IA (air-entrained).

2.3 AGGREGATES

Aggregates shall conform to the following:

2.3.1 Normal Weight Aggregate

Fine and Coarse aggregate, ASTM C 33. Grading requirement for coarse aggregate shall conform to size number 57.

2.4 CURING MATERIALS

2.4.1 Burlap

FS CCC-C-467.

2.4.2 Impervious Sheets

ASTM C 171, type optional, except that polyethylene film, if used, shall be white opaque.

2.4.3 Liquid Membrane Forming Curing Compound

ASTM C 309, Type I, Class A. Moisture loss not more than 0.055 gr/cm^2 when applied at 200 ft^2/gallon.

2.5 NONSHRINK GROUT

Nonshrink grout shall conform to ASTM C 1107 and shall be a formulation suitable for the application. Nonshrink grout shall have a minimum 28-day compressive strength of 5000 psi.

2.6 WATER

Clean and not detrimental to concrete.

2.7 JOINT AND FILTER MATERIALS

Joint filter, Type A, ASTM D 1751, Asphalt impregnated fiberboard, ½ inch thick.

PART 3 - EXECUTION

3.1 PREPARATION OF SURFACES

Surfaces to receive concrete shall be clean and free from frost, ice, mud, water, hardened concrete, debris and foreign material.

3.2 BATCHING, MIXING AND TRANSPORTING CONCRETE

Ready-mixed concrete shall be batched, mixed and transported in accordance with ASTM C 94. Truck mixers, agitators, and nonagitating units shall comply with NRMCA TMMB-1. Ready-mix plant equipment and facilities shall be certified in accordance with NRMCA-QA-3.

3.2.1 Admixtures

Admixtures shall be batched within an accuracy of 3 percent. Where two or more admixtures are used in the same batch, they shall be batched separately and must be compatible. Concrete that shows evidence of total collapse or segregation caused by the use of admixture shall be removed from the site.

3.2.2 Control of Mixing Water

No water from the truck system or elsewhere shall be added after the initial introduction of mixing water for the batch, except, when on arrival at the job site, the slump of the concrete is less than that specified. Water added to bring the slump within the specified range shall not change the total water in the concrete to a point that the approved water-cement ratio is exceeded. The drum shall be turned an additional 30 revolutions, or more, if necessary, until the added water is uniformly mixed into the concrete. Water shall not be added to the batch at any later time.

3.3 SAMPLING AND TESTING

3.3.1 Sampling of Concrete

Samples of concrete for air, slump, and strength tests shall be taken in accordance with ASTM C 172.

3.3.1.1 Air Content

Test for air content shall be performed in accordance with ASTM C 173 or ASTM C 231. A minimum of 1 test per truck or per day, whichever is less, shall be conducted.

3.3.1.2 Slump

At least 2 slump tests shall be made on randomly selected batches of each mixture of concrete during each day's concrete placement. Tests shall be performed in accordance with ASTM C 143.

3.3.2 Evaluation and Acceptance of Concrete

3.3.2.1 Frequency of Testing

Samples for tests of each class of concrete shall be taken not less than for every 75 or fewer cubic yards, but once a day. Four cylinders shall be collected per sampling event.

3.3.2.2 Testing Procedures

Cylinders for acceptance tests shall be molded and cured in accordance with ASTM C 31. Cylinders shall be tested in accordance with ASTM C 39. Strength tests shall be made using one cylinder of concrete tested at 7 days and 2 other cylinders tested at 28 days. The other remaining cylinder will be held for future testing, if required.

3.3.2.3 Evaluation of Results

Concrete specified on the basis of compressive strength will be considered satisfactory if the averages of all sets of strength test results equal or exceed the specified strength and no individual strength test result falls below the required strength by more than 500 pounds per square inch.

3.3.3 Investigation of Low-Strength Test Results

When the results of the strength tests on control cylinders indicate that the concrete in place does not meeting specification requirements, or if tests of field-cured cylinders indicate deficiencies in protection and curing, steps shall be taken to assure that load-carrying capacity of the structure is not jeopardized. Nondestructive testing in accordance with ASTM C 597, ASTM C 803 or ASTM C 805 may be permitted to determine the relative strengths at various locations in the structure as an aid in evaluating concrete strength in place or for selecting areas to be cored. Such tests, unless properly calibrated and correlated with other test data, shall not be used as a basis for acceptance or rejection. When strength of concrete in place is considered potentially deficient, cores shall be obtained and tested in accordance with ASTM C 42. At least three representative cores shall be taken from each member or area of concrete in place that is considered potentially deficient. The location of cores shall be determined by the QC Engineer to least impair the strength of the structure. If the concrete in the structure will be dry under service conditions, the cores shall be air dried (temperature 60 to 80 degrees F, relative humidity less than 60 percent) for seven days before testing and shall be tested dry. If the concrete in the structure will be more than superficially wet under service conditions, the cores shall be tested after moisture conditioning in accordance with ASTM C 42. Concrete in the area represented by the core testing will be considered adequate if the average strength of the cores is equal to or a least 85 percent of the specified strength requirement and if no single core is less than 75 percent of the specified strength requirement. If the core tests are inconclusive or impractical to obtain, or if structural analysis does not confirm the safety of the structure, load tests may be directed by the Field Engineer in accordance with the requirements of ACI 318. Concrete work evaluated by structural analysis or by results of a load test and found deficient shall be corrected in a manner satisfactory to the Engineering Manager.

3.4 CONVEYING CONCRETE

Concrete shall be conveyed from mixer to forms as rapidly as possible and within the time interval specified in Paragraph 3.5, Concrete Placement, by methods which will prevent segregation or loss of ingredients.

3.4.1 Chutes

When concrete can be placed directly from a truck mixer or other transporting equipment, chutes attached to this equipment may be used. Separate field constructed chutes will not be permitted except when specifically approved.

3.5 CONCRETE PLACEMENT

Mixed concrete which is transported in truck mixers or agitators or concrete which is truck mixed, shall be discharged within 1½ hours or before the drum has revolved 300 revolutions, whichever comes first after the introduction of the mixing water to the cement and aggregates or the introduction of the cement to the aggregates. These limitations may be waived by the QC Engineer if the concrete is of such slump after the 1½ hour time or 300 revolution limits have been reached that it can be placed, without addition of water to the batch. When the concrete temperature exceeds 90°F, the time shall be reduced to 60 minutes.

3.5.1 Placing Operations

Concrete shall be placed in accordance with ACI 301. Concrete shall be handled from mixer to forms in a continuous manner until the approved unit of operation is completed. Reinforcement and embedded items shall be inspected and forms shall be retightened and checked immediately before placing concrete. Placing will not be permitted when the sun, heat, wind, or limitations of facilities furnished by the Contractor prevent proper consolidation, finishing and curing. Concrete shall be deposited as close as possible to its final position in the forms, and there shall be no vertical drop greater than 4 feet except where suitable equipment is provided to prevent segregation. Depositing of the concrete shall be so regulated that it will be effectively consolidated in horizontal layers not more than 12 inches thick, except that all slabs shall be placed in a single layer. Concrete shall be continuously placed between predetermined joints without interruptions, i.e., cold joints are not permitted.

3.5.2 Consolidation

Immediately after placing, each layer of concrete shall be consolidated by internal vibrators, except for slabs 4 inches or less. Vibrators shall, at all times, be adequate in effectiveness and number to properly consolidate the concrete; a spare vibrator shall be kept at the job site during all concrete placing operations. The vibrators shall have a frequency of not less than 8000 vibrations per minutes, and the head diameter and amplitude shall be appropriate for the concrete mixture being placed. Vibrators shall be inserted vertically at uniform spacing over the area of placement. The distance between insertions shall be approximately 1½ times the radius of action of the vibrator so that the area being vibrated will overlap the adjacent just-vibrated area by a few inches. The vibrator shall penetrate rapidly to the bottom of the layer and at least 6 inches into the preceding layer if there is such. Vibrator shall be held stationary until the concrete is consolidated and then withdrawn slowly. Vibrators shall not be used to transport concrete within the forms. Slabs 4 inches and less in thickness shall be consolidated by properly designed vibrating screeds or other approved technique.

3.5.3 Cold Weather Requirements

Special protection measures, approved by the QC Engineer, shall be used if freezing temperatures are anticipated before the expiration of the curing period. The ambient temperature of the air where concrete is to be placed shall be a minimum 28 degrees F and rising, and the temperature of surface to receive concrete shall not be less than 33 degrees F. The temperature of the concrete when placed shall be not less than 50 degrees F or more than 75 degrees F. Heating of the mixing water or aggregates may be required to regulate the concrete placing temperature. All cold weather requirements shall conform to ACI 306 unless otherwise specified.

3.5.4 Warm Weather Requirements

The temperature of the concrete placed during warm weather shall not exceed 90 degrees F except where an approved retarder is used. The mixing water and/or aggregate shall be cooled, if necessary, to maintain satisfactory placing temperature. In no case shall the placing temperature exceed 95 degrees F. All hot weather requirements shall conform to ACI 304R unless otherwise specified.

3.6 CONSTRUCTION JOINTS

Construction joints shall be located and constructed as indicated on the drawings. Where concrete work is interrupted by weather, or other similar type of delay. Prior to placing additional concrete, horizontal construction joints shall be prepared as specified in Paragraph 3.1, Preparations of Surfaces.

3.7 EXPANSION AND CONTRACTION JOINTS

Expansion and contraction joints shall be located and constructed as indicated on the drawings.

3.8 FINISHING CONCRETE

3.8.1 Formed Surfaces

3.8.1.1 Repair of Surface Defects

Surface defects shall be repaired within 24 hours after the removal of forms. Honeycombed and other defective areas shall be cut back to solid concrete or to a depth of not less than 1 inch, whichever is greater. Edges shall be cut perpendicular to the surface of the concrete. The prepared areas shall be dampened and brush-coated with neat cement grout. The repair shall be made using mortar consisting of not more than 1 part cement to 2½ parts sand. The mixed mortar shall be allowed to stand to stiffen (approximately 45 minutes), during which time the mortar shall be intermittently remixed without the addition of water. After the mortar has attained the stiffest consistency that will permit placing, the patching mix shall be thoroughly tamped into place by a means approved by the QC Engineer and finished slightly higher than the surrounding surface. Holes left after the removal of tie rods shall be filled by dry packing. Repaired surfaces shall be cured as required for adjacent surfaces. The temperature of concrete,

mortar patching material and ambient air shall be above 50 degrees F while making repairs and during the curing period. Concrete with defects which affect the strength of the member or with excessive honeycombs will be rejected, or the defects shall be corrected as directed by the Field Engineer.

3.8.1.2 Finish

All formed exterior surfaces shall have a smooth, rubbed finish.

3.8.2 Unformed Surfaces

In cold weather, concrete being finished shall not be less than 32 degrees F and the air temperature shall be a minimum 28 degrees F and rising. In hot windy weather when the rate of evaporation of surface moisture, as determined by methodology presented in ACI 305R, may reasonably be expected to exceed 0.2 pounds per square foot per hour; coverings, windbreaks, or fog sprays shall be provided as necessary to prevent premature setting and drying of the surface. The dusting of surfaces with dry materials or the addition of water during finishing will not be permitted. Finished surfaces shall be plane, and surfaces shall be pitched to drain.

3.8.2.1 Float Finish

Roadway and spillway surfaces shall be given a float finish. Screening shall be followed immediately by darbying or bull floating before bleeding water is present, to bring the surface to a true, even plane. After the concrete has stiffened to permit a man to walk on it without leaving footprints more than ¼ inch deep the water sheen has disappeared, it shall be wood or magnesium floated.

3.8.2.2 Broomed Finish

Dental concrete and the roadway surface shall be given a broomed finish. After floating, the surface shall be lightly steel troweled, and then carefully scored by pulling a coarse fiber push-type broom across the surface. Brooming shall be transverse to traffic or at right angles to the slope of the slab. After the end of the curing period, the surface shall be vigorously broomed with a coarse fiber broom to remove all loose or semi-detached particles.

3.8.2.3 Troweled Finish

The spillway surface shall be excluding roadway surfaces, given a trowel finish. After floating is complete and after the surface moisture has disappeared, unformed surfaces shall be steel-troweled to a smooth, even dense finish, free from blemished including trowel marks. In lieu of hand finishing, an approved power finishing machine may be used in accordance with the directions of the machine manufacturer. Care shall be taken to prevent blistering and if such hard steel trowelling shall be done by hand, with the trowel tipped, and using hard pressure, when the surface is at a point that the trowel will produce a ringing sound. The finished surface shall be thoroughly consolidated and shall be essentially free of trowel marks and be uniform in texture and appearance. The concrete mixture used for troweled finished areas shall be adjusted, if

necessary, in order to provide sufficient fines (cementitious material and fine sand) to finish properly.

3.9 CURING AND PROTECTION

3.9.1 General

All concrete with Type I cement shall be cured by an approved method for 7 days. Immediately after placement, concrete shall be protected from premature drying extremes in temperatures, rapid temperature change, mechanical injury, and injury from rain and flowing water. Air and forms in contact with concrete shall be maintained at a temperature above 50 degrees F for the first 3 days and during winter concreting, the thermo-blankets shall be placed on the concrete for the remainder of the specified curing period. Exhaust fumes from combustion heating units shall be vented to the outside of the enclosure and heaters and ducts shall be placed and directed so as not to cause areas of overheating and drying of concrete surfaces or to create fire hazards. All materials and equipment needed for adequate curing and protection shall be available and at the site prior to placing concrete. No fire or excessive heat shall be permitted near or in direct contact with the concrete anytime. Curing shall be accomplished by any of the following methods, or combination thereof.

3.9.2 Moist Curing

Concrete headwalls shall be maintained continuously wet for the entire curing period. When wooden forms are left in place during curing, they shall be kept wet at all times. If the forms are removed before the end of the curing period, curing shall be carried out as on unformed surfaces, using suitable materials. Horizontal surfaces shall be cured by ponding, by covering with a 2-inch minimum thickness of continuously saturated sand, or by covering with waterproof paper, polyethylene sheet, polyethylene-coated burlap or saturated burlap.

3.9.3 Membrane Curing

Membrane curing shall not be used on surfaces that are to receive subsequent treatment. Curing compound shall be applied to formed surfaces immediately after forms are removed. Curing compound shall be applied to slab surfaces as soon as the bleeding water has disappeared. Compound shall be applied in a one-coat continuous operation in accordance with manufactures printed instructions. Concrete surfaces which have been subjected to rainfall within 3 hours shall be resprayed at the coverage specified.

- End of Section -

SECTION 16370

ELECTRICAL DISTRIBUTION SYSTEM, AERIAL

PART 1 - GENERAL

1.1 SUMMARY

This specification covers aerial distribution of power for the Maxey Flats project. The overhead line and pole work for this project shall be performed by the local utility service provider for the purpose of providing 240 VAC 1-phase service at designated locations around the fence perimeter, and at designated locations within the fence perimeter.

The local utility service provider shall furnish all necessary equipment and labor to provide the needed electrical power from the utility's medium-voltage rural distribution system to the load side of each pole-mounted meter base.

Poles, cross arms, guys, all pole hardware, cables, pole masts, weather heads, meter bases, and KWH meters shall be furnished and installed per NEC, NESC, and RUS standards. Existing 7200-120/240 VAC transformers and other equipment may be reused, if necessary. Pole masts, weather heads, and meter bases shall be installed by others. Final tie-ins shall be made by the local utility service provider.

1.2 GENERAL REQUIREMENTS

1.2.1 Terminology

Terminology used in this specification is as defined in IEEE Std 100.

1.2.2 Service Conditions

No unusual service conditions exist at the project location.

1.3 SUBMITTALS

Local utility company is responsible for supplying and installing all overhead electrical service. No submittals are required from the contractor for equipment.

1.4 DELIVERY, STORAGE, AND HANDLING

Devices and equipment shall be visually inspected by the Seller when received and prior to acceptance from conveyance. Stored items shall be protected from the environment in accordance with the manufacturer's published instructions. Damaged items shall be replaced. Metal poles shall be handled and stored in accordance with the manufacturer's instructions.

PART 2 - PRODUCTS

2.1 GENERAL REQUIREMENTS

Products shall conform to the following requirements. Items of the same classification shall be identical including equipment, assemblies, parts, and components.

2.2 STANDARD PRODUCT

Material and equipment shall be the standard product of a manufacturer regularly engaged in the manufacture of the product and shall essentially duplicate items that have been in satisfactory use for at least 2 years prior to bid opening.

2.3 NAMEPLATES

2.3.1 General

Each major component shall have the manufacturer's name, address, type or style, model or serial number, and catalog number on a nameplate securely attached to the equipment. Equipment containing liquid-dielectrics shall have the type of dielectric on the nameplate. Nameplates shall be made of noncorrosive metal. As a minimum, nameplates shall be provided for transformers, regulators, circuit breakers, capacitors, meters and switches.

2.4 CORROSION PROTECTION

2.4.1 Aluminum Materials

Aluminum shall not be used in contact with earth or concrete. Where aluminum conductors are connected to dissimilar metal, fittings conforming to UL 486B shall be used.

2.4.2 Ferrous Metal Materials

2.4.2.1 Hardware

Ferrous metal hardware shall be hot-dip galvanized in accordance with ASTM A 153 and ASTM A 123.

2.4.2.2 Equipment

Equipment and component items, including but not limited to transformers and ferrous metal luminaries not hot-dip galvanized or porcelain enamel finished, shall be provided with corrosion-resistant finishes which shall withstand 120 hours of exposure to the salt spray test specified in ASTM B 117 without loss of paint or release of adhesion of the paint primer coat to the metal surface in excess of 1/16 inch from the test mark. The described test mark and test evaluation shall be in accordance with ASTM D 1654 with a rating of not less than 7 in accordance with TABLE 1, (procedure A). Cut edges or otherwise damaged surfaces of hot-dip

galvanized sheet steel or mill galvanized sheet steel shall be coated with a zinc rich paint conforming to the manufacturer's standard.

2.5 CONDUCTORS, CONNECTORS, AND SPLICES

2.5.1 Aluminum-Composition Conductors

All-aluminum-conductors, AAC, shall be alloy 1350-H19 and comply with ASTM B 230 and ASTM B 231. All-aluminum-alloy-conductors, AAAC, shall be alloy 6201-T81 and comply with ASTM B 398 and ASTM B 399. Aluminum-conductor-steel-reinforced, ACSR, shall comply with ASTM B 232.

2.5.2 Copper Conductors

Hard-drawn-copper conductors shall comply with ASTM B 1 and ASTM B 8 as appropriate for the conductor size.

2.5.3 Connectors and Splices

Connectors and splices shall be of copper alloys for copper conductors, aluminum alloys for aluminum-composition conductors, and a type designed to minimize galvanic corrosion for copper to aluminum-composition conductors. Aluminum-composition and aluminum-composition to copper shall comply with UL 486B, and copper-to-copper shall comply with UL 486A.

2.6 MEDIUM-VOLTAGE LINES

2.6.1 Bare Medium-Voltage Lines

Bare medium-voltage line conductors shall be all-aluminum-alloy-conductor, AAAC; Conductor types shall not be mixed on any project, unless specifically indicated. Conductors larger than No. 2 AWG shall be stranded.

2.6.2 Insulated Medium-Voltage Lines

Insulated medium-voltage line conductors shall be of the factory-assembled, messenger-supported type, having a rated circuit voltage of 15 kV, and a 133 percent insulation level. Conductor material shall be copper. Insulation shall be ethylene-propylene-rubber (EPR) conforming to NEMA WC 8. Messengers shall be zinc-coated steel, aluminum-clad-steel, copper-clad-steel, or composite-copper and copper-clad steel.

2.7 LOW-VOLTAGE LINES

Low-voltage line conductors shall be of the neutral-supported secondary and service drop type with cross-linked thermosetting polyethylene (XLP) insulation in accordance with NEMA WC 7. Neutral-supported secondary and service drop conductors shall be insulated copper with bare hard-drawn-copper or copper-clad steel neutrals. Conductors on secondary racks may be

provided in lieu of neutral-supported cable for pole line circuits where necessary clearances are available.

2.8 POLES AND HARDWARE

Poles shall be as utility deems necessary for their construction.

2.8.1 Wood Poles

Wood poles shall comply with ANSI O5.1, and shall be pressure treated in accordance with AWPA C4, with creosote conforming to AWPA P1/P13or with oil-borne preservatives and petroleum conforming to AWPA P8 and AWPA P9, respectively, and waterborne preservatives conforming to AWPA P5. Waterborne preservatives shall be either chromate or ammoniacal copper arsenate. Any species listed in ANSI O5.1 for which a preservative treatment is not specified in AWPA C4, shall not be used; northern white cedar, if treated as specified for western red cedar, and western fir, if treated as specified for Douglas fir, may be used. Wood poles shall have pole markings located approximately 10 feet from pole butts for poles 50 feet or less in length, and 14 feet from the pole butts for poles longer than 55 feet in length. Poles shall be machine trimmed by turning smooth full length, and shall be roofed, gained, and bored prior to pressure treatment. Where poles are not provided with factory-cut gains, metal gain plates shall be provided.

2.8.2 Steel Poles

No steel poles are anticipated in the performance of this contract.

2.8.3 Concrete Poles

No concrete poles are anticipated in the performance of this contract.

2.8.4 Pole Line Hardware

Zinc-coated hardware shall comply with ANSI C135.1, ANSI C135.2, ANSI C135.4, ANSI C135.14, ANSI C135.17, ANSI C135.22, and ANSI C135.33. Steel hardware shall comply with ASTM A 575 and ASTM A 576. Hardware shall be hot-dip galvanized in accordance with ASTM A 153. Pole-line hardware shall be hot-dip galvanized steel. Washers shall be installed under boltheads and nuts on wood surfaces and elsewhere as required. Washers used on through-bolts and double-arming bolts shall be approximately 2-1/4 inches square and 3/16 inch thick. The diameter of holes in washers shall be the correct standard size for the bolt on which a washer is used. Washers for use under heads of carriage-bolts shall be of the proper size to fit over square shanks of bolts. Eye bolts, bolt eyes, eyenuts, strain-load plates, lag screws, guy clamps, fasteners, hooks, shims, and clevises shall be used wherever required to support and to protect poles, brackets, cross arms, guy wires, and insulators.

2.8.5 Armless Construction

Pole mounting brackets for line-post or pin insulators and eye bolts for suspension insulators shall be as shown. Brackets shall be attached to poles with a minimum of two bolts. Brackets may be either provided integrally as part of an insulator or attached to an insulator with a suitable stud. Bracket mounting surface shall be suitable for the shape of the pole. Brackets for wood poles shall have wood gripping members. Horizontal offset brackets shall have a 5-degree uplift angle. Pole top brackets shall conform to ANSI C135.22, except for modifications necessary to provide support for a line-post insulator. Brackets shall provide strength exceeding that of the required insulator strength, but in no case less than 2,800-pound cantilever strength.

2.8.6 Guy Assemblies

Guy assemblies shall be zinc-coated steel in accordance with ASTM A 475. Guy assemblies, including insulators and attachments, shall provide strength exceeding the required guy strength. Three-eye thimbles shall be provided on anchor rods to permit attachment of individual primary, secondary, and communication down guys. Anchors shall provide adequate strength to support all loads. Guy strand shall be 7 strand. Guy material shall be Class B zinc-coated-steel high-strength, except where two or more guys are used to provide the required strength. Guy rods shall be not less than 8 feet in length by 3/4 inch in diameter.

2.9 INSULATORS

Insulators shall comply with NEMA HV 2 for general requirements. Suspension insulators shall be used at corners, angles, dead-ends, other areas where line insulators do not provide adequate strength, and as indicated. Mechanical strength of suspension insulators and hardware shall exceed the rated breaking strength of the attached conductors.

2.9.1 Medium-Voltage Line Insulators

Medium-voltage line insulators shall comply with ANSI C29.2, ANSI C29.5, ANSI C29.6, and ANSI C29.7 as applicable. Ratings shall not be lower than the ANSI classes indicated in Table I. Horizontal line-post insulators shall be used for armless construction and shall have the same mechanical and electrical ratings as vertical line-post insulators for the ANSI class indicated, but shall be modified to be suitable for horizontal installation. Where line-post insulators are used for angles greater than 15 degrees, clamp-top fittings shall be provided as well as for other locations shown. Conductor clamps for use with clamp-top, line-post insulators shall be hot-dip galvanized malleable iron for copper conductors and aluminum alloy for aluminum-composition conductors. Either line-post or pin insulators may be used for cross arm construction. Pin insulators for use on voltages in excess of 6 kV phase-to-phase shall be radio-interference-freed or else line-post insulators shall be used.

Table 1

Minimum ANSI Rating of Medium-voltage Insulators by Class

Voltage Level	Line-Post	Pin	Suspension
Up to 5 kV	57-1 or 11 57-1 or 11	55-3 55-5	One 52-1 Two 52-1
6 kV to 15 kV	57-1 or 11 57-2 or 12	55-5 56-3	Two 52-2 Two52-3 or 4
16 kV to 25 kV	57-2 or 12 57-3 or 13	56-3 56-4	Two 52-3 or 4 Three 52-3 or 4
26 kV to 35 kV	57-3 or 13 57-4 or 14	56-4 56-5	Three 52-3 or 4 Four 52-3 or 4

2.9.2 Low-Voltage Line Insulators

Low-voltage line insulators shall comply with ANSI C29.2 and ANSI C29.3 as applicable. Spool insulators for use on low-voltage lines shall be mounted on clevis attachments or secondary racks and shall be not smaller than Class 53-2. For No. 4/0 AWG and larger conductors, Class 53-4 shall be used. Suspension insulators on clevis attachments used at dead-ends shall be not smaller than Class 52-1.

2.9.3 Strain Insulators for Guy Wires

Strain insulators for use in insulated guy assemblies shall comply with ANSI C29.4 for porcelain or equivalent fiberglass, and shall have a mechanical strength exceeding the rated breaking strength of the attached guy wire. Insulators shall be not smaller than Class 54-1 for lines up to 5 kV, not smaller than Class 54-2 for lines of 6 kV to 15 kV, not smaller than Class 54-4 with two in tandem for lines of 16 kV to 25 kV, and not smaller than Class 54-4 with two in tandem for lines of 26 kV to 35 kV.

2.9.4 Apparatus Insulators

Apparatus insulators shall comply with IEEE C57.19.00, IEEE C57.19.01, ANSI C29.8, and ANSI C29.9 as applicable.

2.10 CROSS ARM ASSEMBLIES

2.10.1 Cross arms

Cross arms shall comply with RUS Bulletin 1728H-701 and shall be solid wood, distribution type, except cross-sectional area with pressure treatment conforming to AWPA C25, and a 1/4 inch, 45 degree chamfer on all top edges. Cross-sectional area minimum dimensions shall be

4-1/4 inches in height by 3-1/4 inches in depth in accordance with ANSI C2 for Grade B construction. Cross arms shall be 8 feet in length, except that 10 foot cross arms shall be used for cross arm-mounted banked single-phase transformers or elsewhere as indicated. Cross arms shall be machined, chamfered, trimmed, and bored for stud and boltholes before pressure treatment. Factory drilling shall be provided for pole and brace mounting, for four pins or four vertical line-post insulators, and for four suspension insulators, except where otherwise indicated or required. Drilling shall provide required climbing space and wire clearances. Cross arms shall be straight and free of twists to within 1/10 inch per foot of length. Bend or twist shall be in one direction only.

2.10.2 Cross Arm Gains

Cross arm gains shall comply with ANSI C135.33.

2.11 FUSES AND SWITCHES, MEDIUM-VOLTAGE

2.11.1 Fused Cutouts

Medium-voltage fuses and cutouts shall comply with NEMA SG 2 and shall be of the loadbreak open type construction and of the ratings and types indicated. Open-link cutouts are not acceptable. Fuses shall be either indicating or dropout type. Fuse ratings shall be as indicated. Fuse cutouts shall be equipped with mounting brackets suitable for the indicated installations.

2.11.2 Fused Switches

Fused switches shall be single-pole, manual devices with integral power fuses of the dropout type. Fuse ratings shall be as indicated. Each switch shall have a continuous current rating as shown, a momentary asymmetrical current rating as shown and shall be rated for the voltage of the system in which it is installed.

2.11.3 Non-fused Switches

Non-fused switches shall be single-pole, manual devices with a continuous current rating as shown, a momentary asymmetrical current rating as shown, and shall be rated for the voltage of the system in which it is installed.

2.12 TRANSFORMERS

No overhead distribution transformers are anticipated in the performance of this contract. Transformers shall comply with IEEE C57.12.00 for general requirements and ANSI C57.12.20 for specific requirements for overhead transformers. Overhead distribution transformers shall be of the outdoor type, mineral-oil-insulated single-phase or three-phase as indicated and have two separate windings per phase. Transformers shall be provided with necessary auxiliary mounting devices suitable for the indicated installation. Transformers shall have two 2-1/2 percent rated kVA high-voltage taps above and below rated primary voltage. Transformer installations shall include one primary fuse cutout and one surge arrester for each ungrounded phase conductor.

Self-protected transformers are not acceptable. Transformer tanks shall have a standard gray finish.

2.13 SURGE ARRESTERS

Surge arresters shall comply with NEMA LA 1 and IEEE C62.1, IEEE C62.2, and IEEE C62.11, and shall be provided for protection of aerial-to-underground transitions, automatic circuit reclosers, capacitor equipment, group-operated load-interrupter switches, transformers and other indicated equipment. Arresters shall be distribution class, rated as shown. Arresters shall be equipped with mounting brackets suitable for the indicated installations. Arresters shall be of the metal-oxide varistor or combination valve-metal-oxide varistor type suitable for outdoor installations.

2.14 GROUNDING AND BONDING

2.14.1 Driven Ground Rods

Ground rods shall be copper-clad steel conforming to UL 467not less than 3/4 inches in diameter by 10 feet. Sectional type rods may be used.

2.14.2 Grounding Conductors

Grounding conductors shall be bare, except where installed in conduit with associated phase conductors. Insulated conductors shall be of the same material as the phase conductors and green color-coded, except that conductors shall be rated no more than 600 volts. Bare conductors shall be ASTM B 8 soft-drawn unless otherwise indicated. Aluminum is not acceptable.

2.15 PADLOCKS

Padlocks shall comply with ASTM F 883, Type EPC size 2.

2.16 WARNING SIGNS

Warning signs shall be porcelain enameled steel or approved equal. Voltage warning signs shall comply with ANSI C2.

2.17 LIQUID DIELECTRICS

Liquid dielectrics for transformers, capacitors, reclosers, and other liquid-filled electrical equipment shall be non-polychlorinated biphenyl (PCB) mineral oil or less-flammable liquid as specified. Nonflammable fluids shall not be used. Tetrachloroethylene (perchloroethylene) and 1, 2, 4 tetrachlorobenzene fluids shall not be used. Liquid dielectrics in retrofitted equipment shall be certified by the manufacturer as having less than 50 parts-per-million (ppm) PCB content. In lieu of the manufacturer's certification, the Seller may submit a test sample of the dielectric in accordance with ASTM D 923 and have tests performed per ASTM D 4059at a testing facility approved by the Contractor. Equipment with test results indicating PCB level exceeding 50 ppm shall be replaced.

2.18 FACTORY TESTS

Factory tests shall be performed, as follows, in accordance with the applicable publications and with other requirements of these specifications. The Contractor shall be notified at least 10 days before the equipment is ready for testing.

a. High-Voltage Fuses: Manufacturer's standard tests in accordance with IEEE C37.41.

b. Electric Power Insulators: Manufacturer's standard tests in accordance with ANSI C29.1.

PART 3 - EXECUTION

3.1 GENERAL INSTALLATION REQUIREMENTS

Equipment and devices shall be installed and energized in accordance with the manufacturer's published instructions. Circuits installed in conduits or underground and splices and terminations for medium-voltage cable shall conform to the requirements of Section 16375 ELECTRICAL DISTRIBUTION SYSTEM, UNDERGROUND.

3.1.1 Conformance to Codes

The installation shall comply with the requirements and recommendations of NFPA 70 and ANSI C2 for medium loading districts, Grade B construction. No reduction in clearance shall be made.

3.1.2 Verification of Dimensions

The Seller shall become familiar with details of the work, shall verify dimensions in the field, and shall notify the Contractor of any discrepancy before performing any work.

3.1.3 Disposal of Liquid Dielectrics

PCB-contaminated dielectric shall be marked as PCB and transported to and incinerated by an approved EPA waste disposal facility. The Seller shall furnish certification of proper disposal. Contaminated dielectric shall not be diluted to lower the level of contamination.

3.2 POLE INSTALLATION

Joint-use electric/roadway-lighting poles for overhead electric and communication lines shall be wood poles utilizing cross arm construction. Cluster-mounted banked single-phase transformer installations shall be provided. Cross arm construction shall be provided for support of other equipment, except where direct-pole mounting is indicated. Provision for communication services is required on pole-line construction, except where specifically noted otherwise. A vertical pole space of not less than 2 feet shall be reserved at all locations.

3.2.1 Wood Pole Setting

Wood Pole Setting: Wood poles shall be set straight and firm. In normal firm ground, minimum pole-setting depths shall be in accordance with the local utility's published standards. In swampy or soft ground, a bog shoe shall be used where support for a pole is required. Poles in straight runs shall be in a straight line. Poles shall be set to maintain as even a grade as practicable. When the average ground run is level, consecutive poles shall not vary more than 5 feet in height. When the ground is uneven, poles differing in length shall be kept to a minimum by locating poles to avoid the highest and lowest ground points. If it becomes necessary to shorten a pole, a piece shall be sawed off the top end and roofed. If any pole is shortened after treatment, the shortened end of the pole shall be given an application of hot preservative. Where poles are set on hilly terrain, along edges of cuts or embankments, or where soil may be washed out, special precautions shall be taken to ensure durable pole foundations, and the setting depth shall be measured from the lower side of the pole. Holes shall be dug large enough to permit proper use of tampers to the full depth of a hole. Earth shall be placed into the hole in 6-inch maximum layers, and then thoroughly tamped before the next layer is placed. Surplus earth shall be placed around each pole in a conical shape and packed tightly to drain water away from poles.

3.3 CROSS ARM MOUNTING

Cross arms shall be bolted to poles with 5/8-inch through-bolts with square washers at each end. Bolts shall extend not less than 1/8 inch or more than 2 inches beyond nuts. On single cross arm construction, the bolt head shall be installed on the cross arm side of the pole. Metal cross arm braces shall be provided on cross arms. Flat braces may be provided for 8 foot cross arms and shall be 1/4 by 1-1/4 inches, not less than 28 inches in length. Flat braces shall be bolted to arms with 3/8-inch carriage bolts with round or square washers between boltheads and cross arms, and secured to poles with ½ by 4 inch lag screws after cross arms are leveled and aligned. Angle braces are required for foot cross arms and shall be 60 inch span by 18-inch drop formed in one piece from 1-1/2 by 1-1/2 by 3/16-inch angle. Angle braces shall be bolted to cross arms with ½-inch bolts with round or square washers between boltheads and cross arms, and secured to poles with 5/8-inch through-bolts. Double cross arms shall be securely held in position by means of 5/8-inch double-arming bolts. Each double-arming bolt shall be equipped with four nuts and four square washers.

3.3.1 Line Arms and Buck Arms

Line arms and buck arms shall be set at right angles to lines for straight runs and for angles 45 degrees and greater; and line arms shall bisect angles of turns of less than 45 degrees. Dead-end assemblies shall be used for turns where shown. Buckarms shall be installed, as shown, at corners and junction poles. Double cross arms shall be provided at ends of joint use or conflict sections, at dead-ends, and at angles and corners to provide adequate vertical and longitudinal strength. Double cross arms shall be provided at each line-crossing structure and where lines not attached to the same pole cross each other.

3.3.2 Equipment Arms

Equipment arms shall be set parallel or at right angles to lines as required to provide climbing space. Equipment arms shall be located below line construction to provide necessary wire and equipment clearances.

3.4 GUY INSTALLATION

Guys shall be provided wherever conductor tensions are not balanced, such as at angles, corners, and dead-ends. Where a single guy will not provide the required strength, two or more guys shall be provided. Where guys are wrapped around poles, at least two guy hooks shall be provided and pole shims shall be provided where guy tension exceeds 6000 pounds. Guy clamps 6 inches in length with three 5/8-inch bolts, or offset-type guy clamps, or approved guy grips shall be provided at each guy terminal. Guy-strain insulators shall be provided in each guy for wood poles. Multiple-helix screw anchors shall be provided in marshy ground; rock anchors shall be installed in rock at right angles to guys, elsewhere anchors shall be of an expanding type, except that power installed screw anchors of equivalent holding power are acceptable. A half-round yellow polyvinyl, fiberglass, or other suitable plastic guy marker, not less than 8 feet in length, shall be provided at the anchor end of each guy shown, securely clamped to the guy or anchor at the bottom and top of the marker. Holding capacities for down guys shall be based on a lead angle of 45 degrees.

3.5 CONDUCTOR INSTALLATION

3.5.1 Line Conductors

Unless otherwise indicated, conductors shall be installed in accordance with manufacturer's approved tables of sags and tensions. Proper care shall be taken in handling and stringing conductors to avoid abrasions, sharp bends, cuts, kinks, or any possibility of damage to insulation or conductors. Conductors shall be paid out with the free end of conductors fixed and cable reels portable, except where terrain or obstructions make this method unfeasible. Bend radius for any insulated conductor shall not be less than the applicable NEMA specification recommendation. Conductors shall not be drawn over rough or rocky ground, or around sharp bends. When installed by machine power, conductors shall be drawn from a mounted reel through stringing sheaves in straight lines clear of obstructions. Initial sag and tension shall be checked by the Seller, in accordance with the manufacturer's approved sag and tension charts, within an elapsed time after installation as recommended by the manufacturer.

3.5.2 Connectors and Splices

Connectors and splices shall be mechanically and electrically secure under tension and shall be of the non-bolted compression type. The tensile strength of any splice shall be not less than the rated breaking strength of the conductor. Splice materials, sleeves, fittings, and connectors shall be noncorrosive and shall not adversely affect conductors. Aluminum-composition conductors shall be wire brushed and an oxide inhibitor applied before making a compression connection. Connectors which are factory-filled with an inhibitor are acceptable. Inhibitors and compression tools shall be of types recommended by the connector manufacturer. Primary line apparatus taps

shall be by means of hot line clamps attached to compression type bail clamps (stirrups). Low-voltage connectors for copper conductors shall be of the solderless pressure type. Non-insulated connectors shall be smoothly taped to provide a waterproof insulation equivalent to the original insulation, when installed on insulated conductors. On overhead connections of aluminum and copper, the aluminum shall be installed above the copper.

3.5.3 Conductor-To-Insulator Attachments

Conductors shall be attached to insulators by means of clamps, shoes or tie wires, in accordance with the type of insulator. For insulators requiring conductor tie-wire attachments, tie-wire sizes shall be as indicated in Table 2.

Table 2

Tie-Wire Requirements

Conductor	Tie Wire
Copper (AWG)	**Soft-Drawn Copper (AWG)**
6	8
4 and 2	6
1 through 3/0	4
4/0 and larger	2
AAC, AAAC, or ACSR (AWG)	AAAC or AAC (AWG)
Any Size	6 or 4

3.5.4 Armor Rods

Armor rods shall be provided for AAC, AAAC, and ACSR conductors. Armor rods shall be installed at supports, except armor rods will not be required at primary dead-end assemblies if aluminum or aluminum-lined zinc-coated steel clamps are used. Lengths and methods of fastening armor rods shall be in accordance with the manufacturer's recommendations. For span lengths of less than 200 feet, flat aluminum armor rods may be used. Flat armor rods, not less than 0.03 by 0.25 inch shall be used on No. 1 AWG AAC and AAAC and smaller conductors and on No. 5 AWG ACSR and smaller conductors. On larger sizes, flat armor rods shall be not less than 0.05 by 0.30 inches. For span lengths of 200 feet or more, preformed round armor rods shall be used.

3.5.5 Medium-Voltage Insulated Cables

Medium-voltage cable messengers shall be attached to poles with clamps providing strength exceeding the required messenger strength and with not less than 5/8-inch through-bolts. Messengers shall be dead-ended, grounded, and storm and line-guyed at corners and dead-ends, and at intervals not exceeding 1000 feet along straight runs.

3.5.6 Low-Voltage Insulated Cables

Low-voltage cables shall be supported on clevis fittings using spool insulators. Dead-end clevis fittings and suspension insulators shall be provided where required for adequate strength. Dead-end construction shall provide strength exceeding the rated breaking strength of the neutral messenger. Clevis attachments shall be provided with not less than 5/8-inch through-bolts. Secondary racks may be used when installed on wood poles and where the span length does not exceed 200 feet. Secondary racks shall be two-, three-, or four-wire, complete with spool insulators. Racks shall meet strength and deflection requirements for heavy-duty steel racks, and shall be either galvanized steel or aluminum alloy. Tops of insulator saddles shall be rounded and smooth to avoid damage to conductor insulation. Each insulator shall be held in place with a 5/8-inch button-head bolt equipped with a nonferrous cotter pin, or equivalent, at the bottom. Racks for dead-ending four No. 4/0 AWG or four larger conductors shall be attached to poles with three 5/8 inch-through-bolts. Other secondary racks shall be attached to poles with at least two 5/8-inch through-bolts. Minimum vertical spacing between conductors shall not be less than 8 inches.

3.6 TRANSFORMER INSTALLATION

Transformers shall be carefully installed so as not to scratch finishes or damage bushings. Transformers shall be installed in accordance with the manufacturer's instructions. After installation, surfaces shall be inspected and scratches shall be touched up with a finish provided by the transformer manufacturer for this purpose.

3.7 CONNECTIONS TO UTILITY LINES

The electric utility shall provide final connections to utility lines.

3.8 CONNECTIONS BETWEEN AERIAL AND UNDERGROUND SYSTEMS

Connections between aerial and underground systems shall be made as shown. Underground cables shall be extended up poles in conduit to cable terminations. Conduits shall be secured to poles by conduit supports spaced not more than 10 feet apart and with one support not more than 12 inches from any bend or termination. Cables shall be supported by devices separate from the conduit, near their point of exit from the riser conduit ac guard. Risers shall be equipped with bushings to protect cables. Capnut potheads shall be used to terminate medium-voltage multiple-conductor cable.

3.9 GROUNDING

Noncurrent-carrying metal parts of equipment and conductor assemblies, such as luminaries, medium-voltage cable terminations and messengers, metal poles, operating mechanisms of pole top switches, panel enclosures, transformers, capacitors, recloser frames (cases) and other noncurrent-carrying metal items shall be grounded. Additional grounding of equipment, neutral, and surge arrester grounding systems shall be installed at poles where indicated.

3.9.1 Grounding Electrodes

Grounding electrodes shall be installed as follows:

a. Driven rod electrodes - Unless otherwise indicated, ground rods shall be located approximately 3 feet out from base of the pole and shall be driven into the earth until the tops of the rods are approximately 1 foot below finished grade. Multiple rods shall be evenly spaced at least 10 feet apart and connected together 2 feet below grade with a minimum No. 6 bare copper conductor.

b. Pole butt electrodes - Pole butt electrodes shall be installed where indicated, except that this method shall not be the sole grounding electrode at transformer locations. The pole butt electrode shall consist of a coil of at least 12 feet of minimum No. 6 bare copper conductor stapled to the butt of the pole.

c. Plate electrodes - Plate electrodes shall be installed in accordance with the manufacturer's instructions and ANSI C2 and NFPA 70.

d. Ground Resistance - The maximum resistance of a driven ground rod, pole butt electrode, or plate electrode shall not exceed 25 ohms under normally dry conditions. Whenever the required ground resistance is not met, provide additional electrodes, interconnected with grounding conductors, to achieve the specified ground resistance. The additional electrodes will be up to three 10 feet rods spaced a minimum of 10 feet apart, driven perpendicular to grade. In high ground resistance, UL listed chemically charged ground rods may be used. If the resultant resistance exceeds 25 ohms measured not less than 48 hours after rainfall, the Contractor shall be notified immediately. Connections below grade shall be fusion welded. Connections above grade shall be fusion welded or shall use UL 467 approved connectors.

3.9.2 Grounding and Bonding Connections

Connections above grade shall be made by the fusion-welding process or with bolted solderless connectors in compliance with UL 467, and those below grade shall be made by a fusion-welding process. Where grounding conductors are connected to aluminum-composition conductors, specially treated or lined copper-to-aluminum connectors suitable for this purpose shall be used.

3.9.3 Grounding Electrode Conductors

On multi-grounded circuits, as defined in ANSI C2, provide a single continuous vertical grounding electrode conductor. Neutrals, surge arresters, and equipment grounding conductors shall be bonded to this conductor. For single grounded or ungrounded systems, provide a grounding conductor for the surge arrester and equipment grounding conductors and a separate grounding conductor for the secondary neutrals. Grounding electrode conductors shall be sized as shown. Secondary system neutral conductors shall be connected directly to the transformer neutral bushings, then connected with a neutral bonding jumper between the transformer neutral bushing and the vertical grounding electrode conductor, as shown. Grounding electrode

conductors shall be stapled to wood poles at intervals not exceeding 2 feet. On metal poles, a preformed galvanized steel strap, 5/8 inch wide by 22 gauge minimum by length, secured by a preformed locking method standard with the manufacturer, shall be used to support a grounding electrode conductor installation on the pole and spaced at intervals not exceeding 5 feet with one band not more than 3 inches from each end of the vertical grounding electrode conductor. Bends greater than 45 degrees in grounding electrode conductor are not permitted.

3.10 FIELD TESTING

3.10.1 General

Field testing shall be performed in the presence of the Contractor. The Seller shall notify the Contractor 10 days prior to conducting tests. The Seller shall furnish materials, labor, and equipment necessary to conduct field tests. The Seller shall perform tests and inspections recommended by the manufacturer unless specifically waived by the Contractor. The Seller shall maintain a written record of tests which includes date, test performed, personnel involved, devices tested, serial number and name of test equipment, and test results. Field reports will be signed and dated by the Seller.

3.10.2 Safety

The Seller shall provide and use safety devices such as rubber gloves, protective barriers, and danger signs to protect and warn personnel in the test vicinity. The Seller shall replace any devices or equipment which are damaged due to improper test procedures or handling.

3.10.3 Ground-Resistance Tests

The resistance of each grounding electrode system shall be measured using the fall-of-potential method defined in IEEE Std 81. Ground resistance measurements shall be made before the electrical distribution system is energized and shall be made in normally dry conditions not less than 48 hours after the last rainfall. Resistance measurements of separate grounding electrode systems shall be made before the systems are bonded together below grade. The combined resistance of separate systems may be used to meet the required resistance, but the specified number of electrodes shall be provided.

3.10.4 Medium-Voltage Preassembled Cable Test

After installation, prior to connection to an existing system, and before the operating test, the medium-voltage preassembled cable system shall be given a high potential test. Direct-current voltage shall be applied on each phase conductor of the system by connecting conductors at one terminal and connecting grounds or metallic shieldings or sheaths of the cable at the other terminal for each test. Prior to the test, the cables shall be isolated by opening applicable protective devices and disconnecting equipment. The method, voltage, length of time, and other characteristics of the test for initial installation shall be in accordance with NEMA WC 7 or NEMA WC 8 for the particular type of cable installed, and shall not exceed the recommendations of IEEE Std 404 for cable joints unless the cable and accessory manufacturers indicate higher voltages are acceptable for testing. Should any cable fail due to a weakness of conductor

insulation or due to defects or injuries incidental to the installation or because of improper installation of cable, cable joints, terminations, or other connections, the Seller shall make necessary repairs or replace cables as directed. Repaired or replaced cables shall be retested.

3.10.5 Pre-Energization Services

The following services shall be performed on the equipment listed below. These services shall be performed subsequent to testing but prior to the initial energization. The equipment shall be inspected to insure that installation is in compliance with the recommendations of the manufacturer and as shown on the detail drawings. Terminations of conductors at major equipment shall be inspected to ensure the adequacy of connections. Bare and insulated conductors between such terminations shall be inspected to detect possible damage during installation. If factory tests were not performed on completed assemblies, tests shall be performed after the installation of completed assemblies. Components shall be inspected for damage caused during installation or shipment and to ensure that packaging materials have been removed.

3.10.6 Operating Tests

After the installation is completed, and at such time as the Contractor may direct, the Seller shall conduct operating tests for approval. The equipment shall be demonstrated to operate in accordance with the specified requirements. An operating test report shall be submitted in accordance with paragraph SUBMITTALS.

3.11 ACCEPTANCE

Final acceptance of the facility will not be given until the Seller has successfully completed all tests and after all defects in installation, material or operation have been corrected.

-- End of Section --

SECTION 16375

ELECTRICAL DISTRIBUTION SYSTEM (LOW VOLTAGE)

PART 1- GENERAL

1.1 SUMMARY OF WORK

This specification describes the requirements for installation of the electrical distribution system which powers various loads around the site when remaining work is complete. The electrical power system will support post closure monitoring of the waste disposal site.

The electrical distribution system consists of a network of distribution equipment and cables which provides power to air and water monitoring equipment. The electrical distribution system will be connected to an existing medium voltage aerial distribution system which is provided, operated and maintained by the local utility company. There will be several service drops located around the perimeter of the site as shown on the drawings which will be individually metered for power consumption.

The Electrical Subcontractor's scope of work shall include the installation and testing of the 120/240 volt distribution and control equipment and cables from the weather head at the service drop and extending to the individual devices in the site monitoring system. The electrical distribution system shall be installed, wired, tested and ready for operation prior to connections being made to the aerial distribution system by the utility.

1.2 REFERENCES

The publications listed in this document form a part of this specification to the extent referenced. The publications are referred to in the text by basic designation only.

1.3 GENERAL REQUIREMENTS

1.3.1 Terminology

Terminology used in this specification is as defined in IEEE Std 100.

1.3.2 Service Conditions

The electrical power system will be a permanent installation which will support the post closure monitoring of the waste disposal site. The power systems will be utilized by air monitors and sampling equipment.

1.4 SUBMITTALS

Engineering approval is required for submittals with an "ENGINEERING" designation; submittals having an "FIO" designation are for information only and are only submitted to IT Corporation (IT). The following documents shall be submitted

Manufacturer's Catalog Data; FIO.

Catalog cuts, brochures, circulars, specifications, product data, and printed information in sufficient detail and scope to verify compliance with the requirements of the contract documents.

Material, Equipment, and Fixture Lists; ENGINEERING

A complete itemized listing of equipment and materials proposed for incorporation into the work. Each entry shall include an item number, the quantity of items proposed, and the name of the manufacturer of each such item.

Electrical Distribution System; ENGINEERING

If departures from the contract drawings are deemed necessary by the Electrical Subcontractor, complete details of such departures along with a set of marked up contract drawings shall be submitted for approval. If no contract drawings exist for the item or items in question a detailed written description along with any sketches or other materials that may be useful to describe the deviation shall be submitted for approval. Approved departures suggested by the Electrical Subcontractor shall be made at no additional cost to IT.

Marked up drawings shall show how components are assembled, function together and how they will be installed on the project. Data and drawings for component parts of an item or system shall be coordinated and submitted as a unit. Data and drawings shall be coordinated and included in a single submission. Multiple submissions for the same equipment or system are not acceptable except where prior approval has been obtained from IT. In such cases, a list of data to be submitted later shall be included with the first submission.

Field Testing; ENGINEERING.

A proposed field test plan, 30 days prior to testing the installed system. No field test shall be performed until the test plan is approved. The test plan shall consist of complete field test procedures including tests to be performed, test equipment required, and tolerance limits.

Test Reports; ENGINEERING.

Six copies of the information described below in 8-1/2 by 11-inch binders having a minimum of three rings, including a separate section for each test. Sections shall be separated by heavy plastic dividers with tabs.

a. A list of equipment used, with calibration certifications.
b. A copy of measurements taken.

c. The dates of testing.
d. The equipment and values to be verified.
e. The condition specified for the test.
f. The test results, signed and dated.
g. A description of adjustments made.

Materials and Equipment; FIO

Where materials or equipment are specified to conform to the standards of the Underwriters Laboratories (UL) or to be constructed or tested, or both, in accordance with the standards of the American National Standards Institute (ANSI), the Institute of Electrical and Electronics Engineers (IEEE), or the National Electrical Manufacturers Association (NEMA), the Electrical Subcontractor shall submit proof that the items provided conform to such requirements. The label of, or listing by, UL will be acceptable as evidence that the items conform. Either a certification or a published catalog specification data statement, to the effect that the item is in accordance with the referenced ANSI or IEEE standard, will be acceptable as evidence that the item conforms. A similar certification or published catalog specification data statement to the effect that the item is in accordance with the referenced NEMA standard, by a company listed as a member company of NEMA, will be acceptable as evidence that the item conforms. In lieu of such certification or published data, the Electrical Subcontractor may submit a certificate from a recognized testing agency equipped and competent to perform such services, stating that the items have been tested and that they conform to the requirements listed, including methods of testing of the specified agencies. Compliance with above-named requirements does not relieve the Electrical Subcontractor from compliance with any other requirements of the specifications.

Operation and Maintenance Manuals; FIO

Six copies of Operation and Maintenance manuals, within 7 calendar days following the completion of tests and including assembly, installation, operation and maintenance instructions, spare parts data which provides supplier name, current cost, catalog order number, and a recommended list of spare parts to be stocked. Manuals shall also include data outlining detailed procedures for system startup and operation, and a troubleshooting guide which lists possible operational problems and corrective action to be taken. A brief description of all equipment, basic operating features, and routine maintenance requirements shall also be included. Documents shall be bound in a binder marked or identified on the spine and front cover. A table of contents page shall be included and marked with pertinent contract information and contents of the manual. Tabs shall be provided to separate different types of documents, such as catalog ordering information, drawings, instructions, and spare parts data. Index sheets shall be provided for each section of the manual when warranted by the quantity of documents included under separate tabs or dividers.

Three additional copies of the instruction manual, within 30 calendar days following the approval of the manuals.

1.5 DELIVERY, STORAGE, AND HANDLING

Devices and equipment shall be visually inspected by the Electrical Subcontractor when received and prior to acceptance from conveyance. Stored items shall be protected from the environment in accordance with the manufacturer's published instructions. Damaged items shall be replaced. Oil filled transformers and switches shall be stored in accordance with the manufacturer's requirements.

1.6 EXTRA MATERIALS

One additional spare fuse or fuse element for each furnished fuse or fuse element shall be delivered to IT when the electrical system is accepted. Two complete sets of all special tools required for maintenance shall be provided, complete with a suitable toolbox. Special tools are those that only the manufacturer provides, for special purposes (to access compartments, or operate, adjust, or maintain special parts).

PART 2 - PRODUCTS

2.1 STANDARD PRODUCT

Material and equipment shall be the standard product of a manufacturer regularly engaged in the manufacture of the product and shall essentially duplicate items that have been in satisfactory use for at least 2 years prior to bid opening. Items of the same classification shall be identical including equipment, assemblies, parts, and components.

2.2 NAMEPLATES

2.2.1 General

Each major component of this specification shall have the manufacturer's name, address, type or style, model or serial number, and catalog number on a nameplate securely attached to the equipment. Nameplates shall be made of noncorrosive metal. As a minimum, nameplates shall be provided for panel boards, circuit breakers, meters, and switches.

2.3 CORROSION PROTECTION

2.3.1 Aluminum Materials

Aluminum shall not be used.

2.3.2 Ferrous Metal Materials

2.3.2.1 Hardware

Ferrous metal hardware shall be hot-dip galvanized in accordance with ASTM A 153 and ASTM A 123.

2.3.2.2 Equipment

Equipment and component items shall be provided with corrosion-resistant finishes which shall withstand 120 hours of exposure to the salt spray test specified in ASTM B 117. Cut edges or otherwise damaged surfaces of hot-dip galvanized sheet steel or mill galvanized sheet steel shall be coated with a zinc rich paint conforming to the manufacturer's standard.

2.4 CABLES

Cables shall be single conductor type unless otherwise indicated.

2.4.1 Conductor Material

Underground cables shall be of soft drawn copper conductor material.

2.4.2 Low-Voltage Cables

Cables shall be rated 600 volts and shall conform to the requirements of NFPA 70. Cables shall utilize cross-linked thermosetting polyethylene (XLP) insulation and shall conform to the requirements of NEMA WC 7or ethylene-propylene-rubber (EPR) insulation and shall conform to the requirements of NEMA WC 8.

2.4.2.1 Service Entrance Cables

Service entrance cables shall conform to UL 854 for Type USE service entrance cable. Other direct buried cable applications shall be single-conductor cable identified for such use and conforming to NEMA WC 7 or NEMA WC 8.

2.4.2.2 In Duct

Cables shall be single-conductor cable, Type THWN in accordance with NFPA 70.

2.4.2.3 Interlocked Armored Cable

Cables shall be rated not less than 600 volts and 90°C and meet the requirements of UL for Type MC cables. Conductors shall be Class B stranded bare annealed copper per ASTM B-3/B-8 insulated with cross-linked polyethylene (XLP) meeting the requirements of ICEA S-66-524 and UL Type XHHW-2. The cable assembly shall consist of the insulated conductors, a single UL ground wire, fillers to make round, an aluminum interlocked armor in accordance with UL 1569 applied overall, and a black sunlight-resistant polyvinyl chloride (PVC) jacket applied overall per ICEA.

2.5 CABLE JOINTS, TERMINATIONS, AND CONNECTORS

2.5.1 Low-Voltage Cable Splices

Low-voltage cable splices and terminations shall be rated at not less than 600 Volts. Splices in conductors No. 10 AWG and smaller shall be made with an insulated, solderless, pressure type connector, conforming to the applicable requirements of UL 486A. Splices in conductors No. 8 AWG and larger shall be made with non-insulated, solderless, pressure type connector, conforming to the applicable requirements of UL 486A and UL 486B. Splices shall then be covered with an insulation and jacket material equivalent to the conductor insulation and jacket. Splices below grade or in wet locations shall be a sealed type conforming to ANSI C119.1 or shall be waterproofed by a sealant-filled, thick wall, heat shrinkable, thermosetting tubing or by pouring a thermosetting resin into a mold that surrounds the joined conductors.

2.5.2 Terminations

Terminations shall be in accordance with IEEE Std 48, Class 1 or Class 2; of the molded elastomer, wet-process porcelain, pre-stretched elastomer, heat-shrinkable elastomer, or taped type. Acceptable elastomers are track-resistant silicone rubber or track-resistant ethylene propylene compounds, such as ethylene propylene rubber or ethylene propylene diene monomer. Separable insulated connectors may be used for apparatus terminations, when such apparatus is provided with suitable bushings. Terminations shall be of the outdoor type, except that where installed inside outdoor equipment housings which are sealed against normal infiltration of moisture and outside air, indoor, Class 2 terminations are acceptable. Class 3 terminations are not acceptable. Terminations, where required, shall be provided with mounting brackets suitable for the intended installation and with grounding provisions for the cable shielding, metallic sheath, and armor.

2.5.2.1 Taped Terminations

Taped terminations shall use standard termination kits providing terminal connectors, field-fabricated stress cones, and rain hoods. Terminations shall be at least 20 inches long from the end of the tapered cable jacket to the start of the terminal connector, or not less than the kit manufacturer's recommendations, whichever is greater.

2.5.2.2 Interlocked Armored Cable Terminations

Metal-clad jacketed cable connectors shall be used to secure, ground, and seal interlocked armored cables to enclosures or raceways. Connectors shall provide a watertight seal and meet the requirements of UL Standard 514 and NEMA FB1-1977 for malleable iron, zinc-plated fittings.

2.6 CONDUIT AND DUCTS

Low-voltage lines or Communication lines run elsewhere may be direct-burial, thick-wall type.

2.6.1 Metallic Conduit

Rigid galvanized steel conduit shall comply with UL 6 and ANSI C80.1. Metallic conduit fittings and outlets shall comply with UL 514A and NEMA FB 1.

2.6.2 Nonmetallic Ducts

2.6.2.1 Direct Burial

Direct burial ducts shall conform to the requirements of UL 651 Schedule 40, or NEMA TC 6 Type DB.

2.6.3 Conduit Sealing Compound

Compounds for sealing ducts and conduit shall have a putty-like consistency workable with the hands at temperatures as low as 35 degrees F, shall neither slump at a temperature of 300 degrees F, nor harden materially when exposed to the air. Compounds shall adhere to clean surfaces of fiber or plastic ducts; metallic conduits or conduit coatings; concrete, masonry, or lead; any cable sheaths, jackets, covers, or insulation materials; and the common metals. Compounds shall form a seal without dissolving, noticeably changing characteristics, or removing any of the ingredients. Compounds shall have no injurious effect upon the hands of workmen or upon materials.

2.7 METERING AND PROTECTIVE DEVICES

2.7.1 Circuit Breakers, Low-Voltage

Low-voltage circuit breakers shall comply with NEMA SG 3 for power, and NEMA AB 1 and UL 489 for molded-case. Distribution panel board mains shall be ground fault circuit interrupter equipped.

2.7.2 Fuses, Medium-Voltage, Including Current-Limiting

Medium-voltage fuses, including current-limiting, shall comply with NEMA SG 2.

2.7.3 Fuses, Low-Voltage, Current-Limiting

Low-voltage, current-limiting fuses shall comply with NEMA FU 1 for Class L or UL 198E for Class R.

2.7.4 Instrument Transformers

Instrument transformers shall comply with ANSI C12.11 for 0.6 kV insulation class with a primary rating suitable for the rated voltage and current of the secondary main bus of the transformer station on which the instrument transformer is installed.

2.7.5 Watt Hour Meters

Watt-hour meters shall comply with ANSI C12.1 and ANSI C12.10, except that numbered terminal wiring sequence and case size may be the manufacturer's standard.

2.8 SURGE ARRESTERS

Surge arresters shall comply with NEMA LA 1, IEEE C62.1, IEEE C62.2, and IEEE C62.11 and shall be provided where indicated. Arresters shall be distribution class, rated as shown. Arresters shall be equipped with mounting brackets suitable for the indicated installations. Arresters shall be of the metal-oxide varistor type.

2.9 GROUNDING AND BONDING

2.9.1 Driven Ground Rods

Ground rods shall be copper-clad steel conforming to UL 467not less than ¾ inches in diameter by 10 feet. Sectional type rods may be used.

2.9.2 Grounding Conductors

Grounding conductors shall be bare, except where installed in conduit with associated phase conductors. Insulated conductors shall be of the same material as phase conductors and green color-coded, except that conductors shall be rated no more than 600 volts. Bare conductors shall be ASTM B 8 soft-drawn copper unless otherwise indicated. Aluminum is not acceptable.

2.10 CONCRETE AND REINFORCEMENT

Concrete shall have a minimum compressive strength of 3000 psi at 28 days. Concrete work shall be as noted on the drawings.

PART 3 - EXECUTION

3.1 GENERAL INSTALLATION REQUIREMENTS

Equipment and devices shall be installed and energized in accordance with the manufacturer's published instructions. Steel conduits installed underground shall be installed and protected from corrosion. Except as covered herein, excavation, trenching, and backfilling shall conform to the requirements of Section 02210, SITE GRADING, EXCAVATION, FILLING AND BACKFILLING.

3.1.1 Conformance to Codes

The installation shall comply with the requirements and recommendations of NFPA 70.

3.1.2 Verification of Dimensions

The Electrical Subcontractor shall become familiar with details of the work, shall verify dimensions in the field, and shall advise IT of any discrepancy before performing any work.

3.2 CABLE AND BUSWAY INSTALLATION

The Electrical Subcontractor shall obtain from the manufacturer an installation manual or set of instructions which addresses such aspects as cable construction, insulation type, cable diameter, bending radius, cable temperature, lubricants, coefficient of friction, conduit cleaning, storage procedures, moisture seals, testing for and purging moisture, etc. The Electrical Subcontractor shall then prepare a checklist of significant requirements which shall be submitted along with the manufacturers instructions in accordance with SUBMITTALS.

3.2.1 Cable Installation Plan and Procedure

Cable shall be installed strictly in accordance with the cable manufacturer's recommendations. Each circuit shall be identified by means of a fiber, laminated plastic, or non-ferrous metal tags, or approved equal in each terminal. Each tag shall contain the following information; cable type, conductor size, circuit number, circuit voltage, cable destination and phase identification.

3.2.1.1 Cable Inspection

The cable reel shall be inspected for correct storage positions, signs of physical damage, and broken end seals. If end seal is broken, moisture shall be removed from cable in accordance with the cable manufacturer's recommendations.

3.2.1.2 Duct Cleaning

Duct shall be cleaned with an assembly that consists of a flexible mandrel (manufacturers standard product in lengths recommended for the specific size and type of duct) that is 1/4 inch less than inside diameter of duct, 2 wire brushes, and a rag. The cleaning assembly shall be pulled through conduit a minimum of 2 times or until less than a volume of 8 cubic inches of debris is expelled from the duct.

3.2.1.3 Duct Lubrication

The cable lubricant shall be compatible with the cable jacket for cable that is being installed. Application of lubricant shall be in accordance with lubricant manufacturer's recommendations.

3.2.1.4 Cable Installation

The Electrical Subcontractor shall provide a cable feeding truck and a cable-pulling winch as required. The Electrical Subcontractor shall provide a pulling grip or pulling eye in accordance with cable manufacturer's recommendations. The pulling grip or pulling eye apparatus shall be attached to polypropylene or manila rope followed by lubricant front-end packs and then by power cables. A dynamometer shall be used to monitor pulling tension. Pulling tension shall not

exceed cable manufacturer's recommendations. The Electrical Subcontractor shall not allow cables to cross over while cables are being fed into duct. For cable installation in cold weather, cables shall be kept at 50 degrees F temperature for at least 24 hours before installation.

3.2.1.5 Nonencased Direct-Burial

Top of duct lines shall be below the frost line depth of 3 inches, but not less than 18 inches below finished grade and shall be installed with a minimum of 3 inches of earth around each duct, except that between adjacent electric power and communication ducts, 12 inches of earth is required. Bottoms of trenches shall be smooth and free of stones, soft spots, and sharp objects. Where bottoms of trenches comprise materials other than sand, a 3-inch layer of sand shall be laid first and compacted to approximate densities of surrounding firm soil before installing ducts. Joints in adjacent tiers of duct shall be vertically staggered at least 6 inches. The first 6-inch layer of backfill cover shall be sand compacted as previously specified. The rest of the excavation shall be backfilled and compacted in 3 to 6 inch layers. Duct banks may be held in alignment with earth. However, high-tiered banks shall use a wooden frame or equivalent form to hold ducts in alignment prior to backfilling.

3.2.2 Installation of Couplings

Joints in each type of duct shall be made up in accordance with the manufacturer's recommendations for the particular type of duct and coupling selected and as approved.

3.2.3 Duct Line Markers

Duct line markers shall be provided as indicated. In addition to markers, a 5 mil brightly colored plastic tape, not less than 3 inches in width and suitably inscribed at not more than 10 feet on centers with a continuous metallic backing and a corrosion-resistant 1 mil metallic foil core to permit easy location of the duct line, shall be placed approximately 12 inches below finished grade levels of such lines.

3.3 PAD-MOUNTED EQUIPMENT INSTALLATION

Pad-mounted equipment shall be installed on concrete pads in accordance with the manufacturer's published, standard installation drawings and procedures, except that they shall be modified to meet the requirements of this document. Units shall be installed so that they do not damage equipment or scratch painted or coated surfaces. After installation, surfaces shall be inspected and scratches touched up with paint or coating provided by the manufacturer especially for this purpose.

3.3.1 Concrete Pads

3.3.1.1 Construction

Concrete pads for pad-mounted electrical equipment shall be poured-in-place. Pads shall be constructed as indicated, except that exact and mounting details are equipment specific and are the responsibility of the Electrical Subcontractor. Tops of concrete pads shall be level and shall

project 3 inches above finished grade and sloped to drain. Edges of concrete pads shall have 3/4-inch chamfer. Conduits for primary, secondary, and grounding conductors shall be set in place prior to placement of concrete pads. Where grounding electrode conductors are installed through concrete pads, PVC conduit sleeves shall be installed through the concrete to provide physical protection.

3.3.1.2 Concrete and Reinforcement

Concrete work shall be as indicated on the drawings.

3.3.1.3 Sealing

When the installation is complete, the Electrical Subcontractor shall seal all conduit and other entries into the equipment enclosure with an approved sealing compound. Seals shall be of sufficient strength and durability to protect all energized live parts of the equipment from rodents, insects, or other foreign matter.

3.4 CONNECTIONS BETWEEN AERIAL AND UNDERGROUND SYSTEMS

Connections between aerial and underground systems shall be made as shown. Underground cables shall be extended up poles in conduit to cable terminations. Conduits shall be secured to the poles by 2-hole galvanized steel pipe straps spaced not more than 10 feet apart and with 1 strap not more than 12 inches from any bend or termination. Cable guards shall be secured to poles in accordance with the manufacturer's published procedures. Conduits shall be equipped with bushings to protect cables and minimize water entry. Cables shall be supported by devices separate from the conduit or guard, near their point of exit from the conduit or guard.

3.5 GROUNDING

A ground ring consisting of the indicated configuration of bare copper conductors and driven ground rods shall be installed around pad-mounted equipment as shown. Equipment frames of metal-enclosed equipment, and other noncurrent-carrying metal parts, such as cable shields, cable sheaths and armor, and metallic conduit shall be grounded. Connections shall be provided from a transformer, to the ground mat. Metallic frames and pull boxes shall be grounded by use of a copper cable, No. 6 AWG.

3.5.1 Grounding Electrodes

Grounding electrodes shall be installed as shown on the drawings and as follows:

a. Driven rod electrodes - Unless otherwise indicated, ground rods shall be driven through the liner into the earth until the tops of the rods are approximately 1 foot above finished grade. The liner shall not be cut, damaged, or penetrated other than the puncture required coincident to the diameter of the rod. Upon completion of the ground rod installation, the liner shall be sealed to the ground rod in the manner prescribed by ITs Field Engineer.

b. Additional electrodes - When the required ground resistance is not met, additional electrodes shall be provided interconnected with grounding conductors to achieve the specified ground resistance. The additional electrodes will be up to three, 10 feet rods spaced a minimum of 10 feet apart. In high ground resistance, UL listed chemically charged ground rods may be used. If the resultant resistance exceeds 25 ohms measured not less than 48 hours after rainfall, IT shall be notified immediately.

3.5.2 Grounding and Bonding Connections

Connections above grade shall be made by the fusion-welding process or with bolted solderless connectors, in compliance with UL 467, and those below grade shall be made by a fusion-welding process.

3.5.3 Grounding and Bonding Conductors

Grounding and bonding conductors include conductors used to bond transformer enclosures and equipment frames to the grounding electrode system. Grounding and bonding conductors shall be sized as shown, and located to provide maximum physical protection. Bends greater than 45 degrees in ground conductors are not permitted. Routing of ground conductors through concrete shall be avoided. When concrete penetration is necessary, nonmetallic conduit shall be cast flush with the points of concrete entrance and exit so as to provide an opening for the ground conductor, and the opening shall be sealed with a suitable compound after installation.

3.5.4 Surge Arrester Grounding

Surge arresters and neutrals shall be bonded directly to the transformer enclosure and then to the grounding electrode system with a bare copper conductor, sized as shown. Lead lengths shall be kept as short as practicable with no kinks or sharp bends.

3.5.5 Riser Pole Grounding

A single continuous vertical grounding electrode conductor shall be installed on each riser pole and connected directly to the grounding electrodes indicated on the drawings or required by these specifications. All equipment, neutrals, surge arresters, and items required to be grounded shall be connected directly to this vertical conductor. The grounding electrode conductor shall be sized as shown. Grounding electrode conductors shall be stapled to wood poles at intervals not exceeding 2 feet.

3.6 FIELD TESTING

3.6.1 General

Field testing shall be performed in the presence of the Electrical Engineer. The Electrical Subcontractor shall notify IT 10 days prior to conducting tests. The Electrical Subcontractor shall furnish all materials, labor, and equipment necessary to conduct field tests. The Electrical Subcontractor shall perform all tests and inspections recommended by the manufacturer unless

specifically waived by IT. The Electrical Subcontractor shall maintain a written record of all tests which includes date, test performed, personnel involved, devices tested, serial number and name of test equipment, and test results. Field test reports shall be signed and dated by the Electrical Subcontractor.

3.6.2 Safety

The Electrical Subcontractor shall provide and use safety devices such as rubber gloves, protective barriers, and danger signs to protect and warn personnel in the test vicinity. The Electrical Subcontractor shall replace any devices or equipment which are damaged due to improper test procedures or handling.

3.6.3 Ground-Resistance Tests

The resistance of each grounding electrode system shall be measured using the fall-of-potential method defined in IEEE Std 81. Ground resistance measurements shall be made before the electrical distribution system is energized and shall be made in normally dry conditions not less than 48 hours after the last rainfall. Resistance measurements of separate grounding electrode systems shall be made before the systems are bonded together below grade. The combined resistance of separate systems may be used to meet the required resistance, but the specified number of electrodes must still be provided.

a. Single rod electrode - 25 ohms.
d. Ground ring - 25 ohms.

3.6.4 Low-Voltage Cable Test

Low-voltage cable, complete with splices, shall be tested for insulation resistance after the cables are installed, in their final configuration, ready for connection to the equipment, and prior to energization. The test voltage shall be 500 volts dc, applied for one minute between each conductor and ground and between all possible combination conductors in the same trench, duct, or cable, with all other conductors in the same trench, duct, or conduit. The minimum value of insulation shall be:

$$R\,(megohms) = \frac{(Rated\ Voltage\,(kV) + 1)\ x\ 1000}{Length\ of\ Cable\,(FT)}$$

Each cable failing this test shall be repaired or replaced. The repaired cable shall be retested until failures have been eliminated.

3.6.5 Pre-Energization Services

Equipment shall be inspected to ensure that installation is in compliance with the recommendations of the manufacturer and as shown on the detail drawings. Terminations of conductors at major equipment shall be inspected to ensure the adequacy of connections. Bare

and insulated conductors between such terminations shall be inspected to detect possible damage during installation. If factory tests were not performed on completed assemblies, tests shall be performed after the installation of completed assemblies. Components shall be inspected for damage caused during installation or shipment to ensure packaging materials have been removed. Components capable of being both manually and electrically operated shall be operated manually prior to the first electrical operation. Components capable of being calibrated, adjusted, and tested shall be calibrated, adjusted, and tested in accordance with the instructions of the equipment manufacturer.

3.6.6 Operating Tests

After the installation is completed, and at such times as IT may direct, the Electrical Subcontractor shall conduct operating tests for approval. The equipment shall be demonstrated to operate in accordance with the requirements herein. An operating test report shall be submitted in accordance with paragraph SUBMITTALS.

3.7 ACCEPTANCE

Final acceptance of the facility will not be given until the Electrical Subcontractor has successfully completed all tests and after all defects in installation, material or operation have been corrected.

- End of Section -

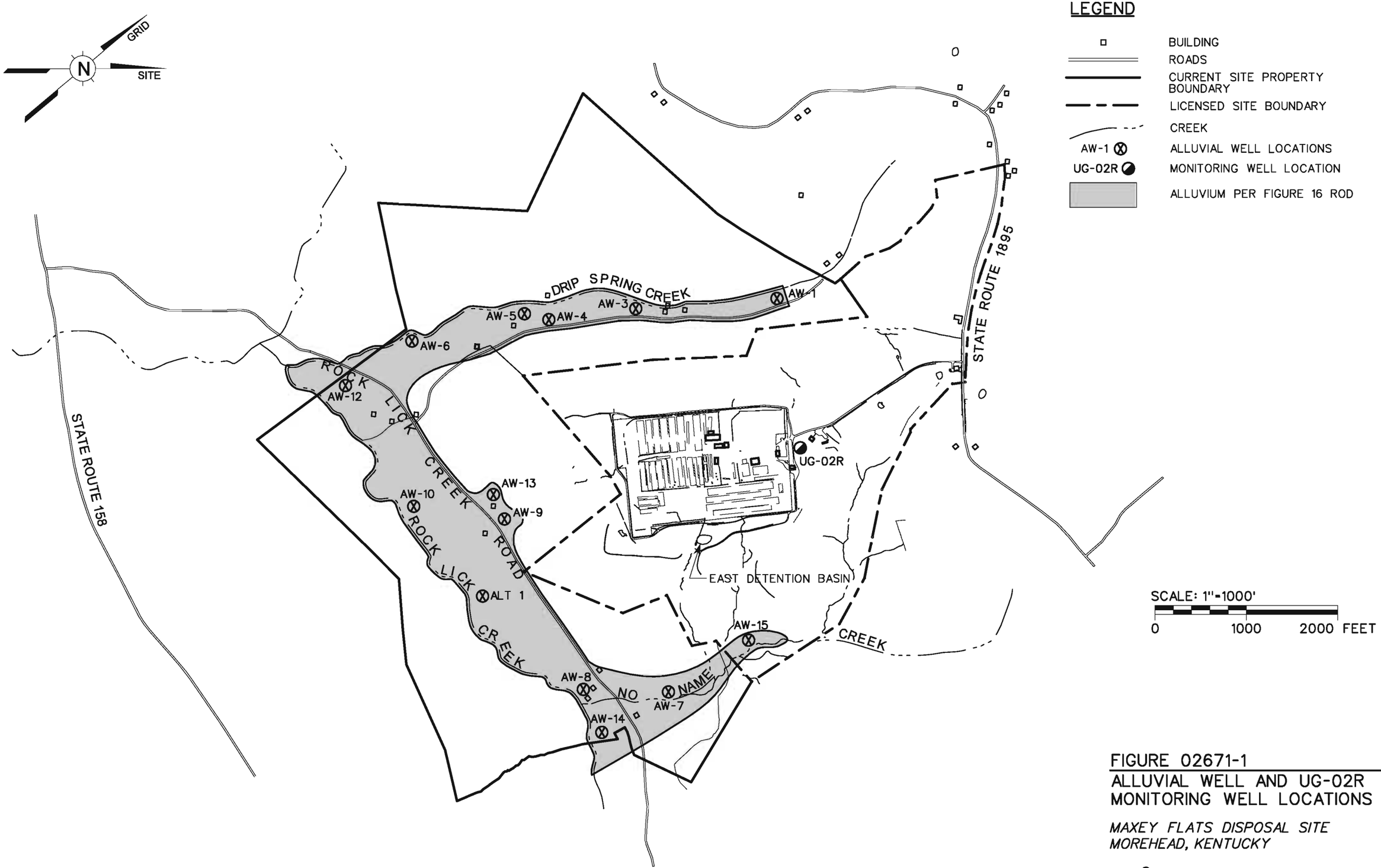

FIGURE 02671-1

ALLUVIAL WELL AND UG-02R MONITORING WELL LOCATIONS

MAXEY FLATS DISPOSAL SITE
MOREHEAD, KENTUCKY

Shaw
Shaw Environmental, Inc.

STARTING DATE: 12/8/00	DATE LAST REV.: 10/29/02	DRAFT. CHCK. BY: J. WATERS	INITIATOR: J. SERAFIN	DWG. NO.: o&mfig02671-1.dgn	
DRAWN BY: G. PACHECO	DRAWN BY: J. WATERS	ENGR. CHCK. BY: J. SERAFIN	PROJ. MGR.: M. CAPPS	PROJ. NO.: 838409	

jwaters c:\cadd\Design\o&mfig02671-1.dgn 09/24/03 08:48:01 AM

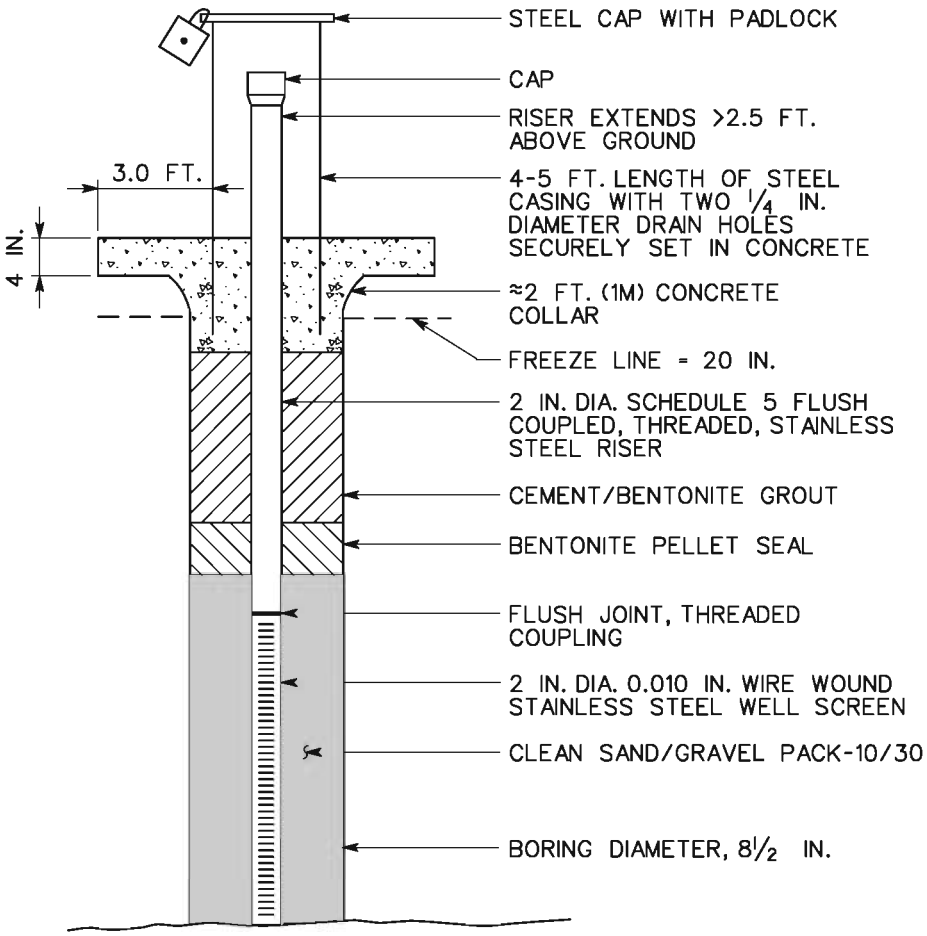

NOTES:

1. PROTECTIVE WELL GUARDS WILL BE INSTALLED AROUND WELLS IN AREAS WHERE VEHICULAR TRAFFIC IS ANTICIPATED.
2. BORING DIAMETER MAY BE ADJUSTED IF THE ROTOSONIC DRILLING METHOD IS USED.

FIGURE 02671-2A
DIAGRAM OF TYPE A WELLS

MAXEY FLATS DISPOSAL SITE
MOREHEAD, KENTUCKY

Shaw Environmental, Inc.

STARTING DATE: 07/20/98 | DATE LAST REV.: 09/24/03 | DRAFT. CHCK. BY: D. WILLIAMS | INITIATOR: D. WILLIAMS | DWG. NO.: 02671-2A.DGN
DRAWN BY: L. STOUT | DRAWN BY: JWATERS | ENGR. CHCK. BY: | PROJ. MGR.: B. PRICE | PROJ. NO.: 838409
09/24/03 08:50:14 AM
C:\CADD\DESIGN\O&M\FIG02671-2A.DGN JWATERS

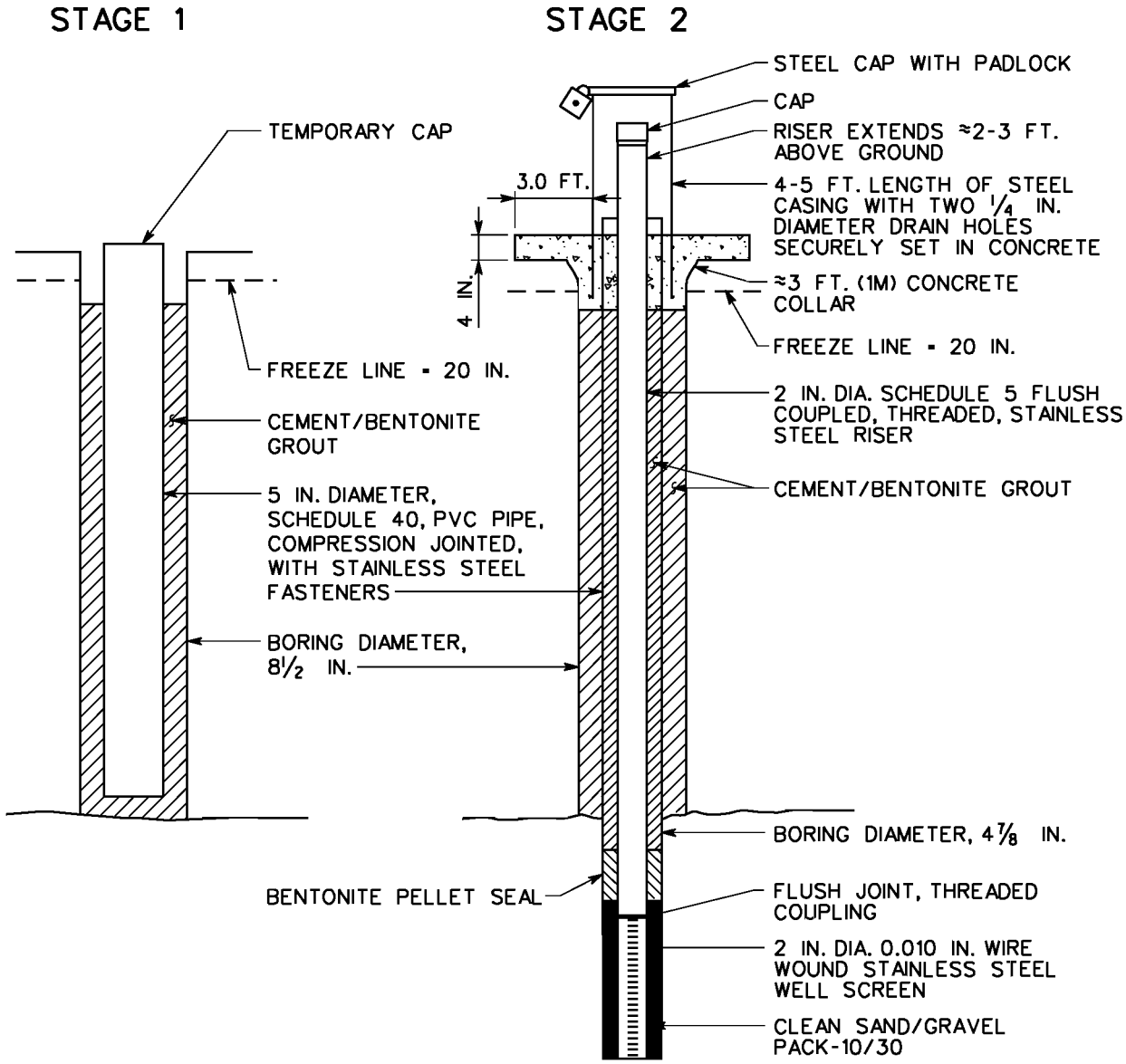

NOTES:

1. PROTECTIVE WELL GUARDS WILL BE INSTALLED AROUND WELLS IN AREAS WHERE VEHICULAR TRAFFIC IS ANTICIPATED.
2. BORING DIAMETERS AND DIAMETER OF SCHEDULE 40 PVC CASING MAY BE ADJUSTED IF THE ROTOSONIC DRILLING METHOD IS USED.

FIGURE 02671-2B
DIAGRAM OF TYPE B WELLS

MAXEY FLATS DISPOSAL SITE
MOREHEAD, KENTUCKY

Shaw™ Shaw Environmental, Inc.

STARTING DATE: 07/20/98 | DATE LAST REV. 09/24/03 | DRAFT. CHCK. BY: D. WILLIAMS | INITIATOR: D. WILLIAMS | DWG. NO.: 02671-2B.DGN
DRAWN BY: L. STOUT | DRAWN BY: JWATERS | ENGR. CHCK. BY: | PROJ. MGR.: B. PRICE | PROJ. NO.: 838409
02:46:44 PM JWATERS
09/24/03 O&MFIG02671-2B.DGN

Appendix G – The Commonwealth of Kentucky Training Certificates

The Commonwealth of Kentucky Training Certificates

Pursuant to agreements with the EPA and the Commonwealth, Shaw provided training for the Commonwealth prior to substantial completion of IRP Cap construction. The training certificate documents the training provided to the Commonwealth by Shaw on behlf of the Settling Private Parties for the following:

- Geomembrane liner welding
- Installation and data down load for the extended sump lids and data loggers
- ISCO flow meter data collection
- Cathodic protection for LSF Tank 1 and 2.

The training provided to the Commonwealth consisted of the following:

- Geomembrane liner welding
  - Classroom training regarding the wedge welding equipment and process and the extrusion welding equipment and process. In addition to equipment testing, testing requirements for welded seams, and documentation.
  - Field /hands-on training for wedge welding and extrusion welding.
- Installation and data down load for the extended sump lids and data loggers
  - Classroom and field training regarding the installation of the Settling Private Party (SSP) and the Commonwealth designated sump lids.
  - Classroom and field training regarding the installation, calibration, and data download of the SSP designated data loggers.
- ISCO flow meter data collection
  - Field demonstration/training performed by the ISCO representative regarding the operation of the flow measuring device at the H-flume.
- Cathodic protection for LSF Tank 1 and 2
  - Field demonstration/training performed by the Subcontractor, Allied Corrosion Industries, regarding the operation and maintenance procedures for the rectifier and junction box associated with modified LSF Tanks 1 and 2. Following the cathodic the protection system installation, EPA directed closure of LSF Tank 2 yielding LSF Tank 1 serving as storage for future non-liquid waste disposal by the Commonwealth.

See the attached copies of the Certificate of Attendance for each Commonwealth personnel receiving the applicable training.

Geomembrane Liner Welding Training Certificates

CERTIFICATE OF ATTENDANCE

Title: Liner Welding Training

Welding Training- Classroom Phase
Given by Rebel Wright and Bill Hlopak
October 8, 2002

Wedge Welding and Extrusion Welding- Hands on Phase
Given by Rebel Wright and Dave Randolph
Wedge Welding on December 4 , 2002 and January 9, 2003
Extrusion Welding on December 15 and 17, 2002
Maxey Flats Disposal Site, Morehead, Kentucky

Provided By:
Shaw Environmental and Infrastructure, Inc.
Maxey Flats Project 2593 Maxey Flat Rd, Hillsboro, KY 41049, (606)876-3100

This certifies that Roger Brown attended the one day classroom training for Liner Welding and Testing on October 8, 2002. Included in the training was a discussion of 1) The Wedge Welding Equipment and Process; 2) The Extrusion Welding Equipment and Process; and 3) The Testing Equipment, Requirements, and Documentation. This further certifies that Roger Brown performed hands on training for Wedge Welding and / or Extrusion Welding on the days indicated above.

William J. Hlopak

William Hlopak
Shaw Environmental And Infrastructure

CERTIFICATE OF ATTENDANCE

Title: Liner Welding Training

Welding Training- Classroom Phase
Given by Rebel Wright and Bill Hlopak
October 8, 2002

Provided By:
Shaw Environmental and Infrastructure, Inc.
Maxey Flats Project 2593 Maxey Flat Rd, Hillsboro, KY 41049, (606)876-3100

This certifies that Omar Heath attended the one day classroom training for Liner Welding and Testing on October 8, 2002. Included in the training was a discussion of 1) The Wedge Welding Equipment and Process; 2) The Extrusion Welding Equipment and Process; and 3) The Testing Equipment, Requirements, and Documentation.

William J. Hlopak

William Hlopak
Shaw Environmental And Infrastructure

CERTIFICATE OF ATTENDANCE

Title: Liner Welding Training

Welding Training- Classroom Phase
Given by Rebel Wright and Bill Hlopak
October 8, 2002

Wedge Welding and Extrusion Welding- Hands on Phase
Given by Rebel Wright and Dave Randolph
Wedge Welding on November 20 and 25, 2002 and January 8 and 9, 2003
Extrusion Welding on December 10, 2002
Maxey Flats Disposal Site, Morehead, Kentucky

Provided By:
Shaw Environmental and Infrastructure, Inc.
Maxey Flats Project 2593 Maxey Flat Rd, Hillsboro, KY 41049, (606)876-3100

This certifies that Donnie Pollitt attended the one day classroom training for Liner Welding and Testing on October 8, 2002. Included in the training was a discussion of 1) The Wedge Welding Equipment and Process; 2) The Extrusion Welding Equipment and Process; and 3) The Testing Equipment, Requirements, and Documentation. This further certifies that Donnie Pollit performed hands on training for Wedge Welding and / or Extrusion Welding on the days indicated above.

William J. Hlopak

William Hlopak
Shaw Environmental And Infrastructure

CERTIFICATE OF ATTENDANCE

Title: Liner Welding Training

Welding Training- Classroom Phase
Given by Rebel Wright and Bill Hlopak
October 8, 2002

Wedge Welding and Extrusion Welding- Hands on Phase
Given by Rebel Wright and Dave Randolph
Wedge Welding on November 20 , 2002 and January 9, 2003
Maxey Flats Disposal Site, Morehead, Kentucky

Provided By:
Shaw Environmental and Infrastructure, Inc.
Maxey Flats Project 2593 Maxey Flat Rd, Hillsboro, KY 41049, (606)876-3100

This certifies that Jeff Stamper attended the one day classroom training for Liner Welding and Testing on October 8, 2002. Included in the training was a discussion of 1) The Wedge Welding Equipment and Process; 2) The Extrusion Welding Equipment and Process; and 3) The Testing Equipment, Requirements, and Documentation. This further certifies that Jeff Stamper performed hands on training for Wedge Welding and / or Extrusion Welding on the days indicated above.

William J. Hlopak

William Hlopak
Shaw Environmental And Infrastructure

CERTIFICATE OF ATTENDANCE

Title: Liner Welding Training

Welding Training- Classroom Phase
Given by Rebel Wright and Bill Hlopak
October 8, 2002

Wedge Welding and Extrusion Welding- Hands on Phase
Given by Rebel Wright and Dave Randolph
Wedge Welding on November 25 , 2002 and January 8 and 9, 2003
Extrusion Welding on December 10, 2002
Maxey Flats Disposal Site, Morehead, Kentucky

Provided By:
Shaw Environmental and Infrastructure, Inc.
Maxey Flats Project 2593 Maxey Flat Rd, Hillsboro, KY 41049, (606)876-3100

This certifies that Tom Stewart attended the one day classroom training for Liner Welding and Testing on October 8, 2002. Included in the training was a discussion of 1) The Wedge Welding Equipment and Process; 2) The Extrusion Welding Equipment and Process; and 3) The Testing Equipment, Requirements, and Documentation. This further certifies that Tom Stewart performed hands on training for Wedge Welding and / or Extrusion Welding on the days indicated above.

William Hlopak
Shaw Environmental And Infrastructure

Sump Lid and Data Logger Training Certificate

CERTIFICATE OF ATTENDANCE

Title: Sump Lid and Data Logger Training

Installation of the Extended Sump Lids - Classroom and Field Training, *by* Rich Newton

Installation and Calibration of the Settling Private Party Designated Data Loggers - Field Training, *by* Rich Newton

Data Down Load of the Settling Private Party Designated Data Loggers - Classroom and Field Training, *by* Lin Liu

October 1 and 18, 2002; November 8, 2002
Maxey Flats Disposal Site, Morehead, KY

Provided by
Shaw Environmental, Inc.
312 Directors Drive, Knoxville, Tennessee 37923, (865) 690-3211

This certifies that Roger Brown attended a total of 8 hours classroom and field training regarding 1) installation of the Settling Private Party and Commonwealth of Kentucky designated sump lids, 2) installation and calibration of the Settling Private Party designated data loggers, and 3) data down load of the Settling Private Party designated data loggers.

Rich Newton
Shaw Environmental, Inc.

Lin Liu
Shaw Environmental, Inc.

CERTIFICATE OF ATTENDANCE

Title: Sump Lid and Data Logger Training

Installation of the Extended Sump Lids - Classroom and Field Training, *by* Rich Newton

Installation and Calibration of the Settling Private Party Designated Data Loggers - Field Training, *by* Rich Newton

Data Down Load of the Settling Private Party Designated Data Loggers - Classroom and Field Training, *by* Lin Liu

October 1, 2002
Maxey Flats Disposal Site, Morehead, KY

Provided by
Shaw Environmental, Inc.
312 Directors Drive, Knoxville, Tennessee 37923, (865) 690-3211

This certifies that Omar Heath attended a total of 4 hours classroom training regarding 1) installation of the Settling Private Party and Commonwealth of Kentucky designated sump lids, 2) installation and calibration of the Settling Private Party designated data loggers, and 3) data down load of the Settling Private Party designated data loggers.

Rich Newton
Shaw Environmental, Inc.

Lin Liu
Shaw Environmental, Inc.

CERTIFICATE OF ATTENDANCE

Title: Sump Lid and Data Logger Training

Installation of the Extended Sump Lids - Classroom and Field Training, *by* Rich Newton

Installation and Calibration of the Settling Private Party Designated Data Loggers - Field Training, *by* Rich Newton

Data Down Load of the Settling Private Party Designated Data Loggers - Classroom and Field Training, *by* Lin Liu

October 18, 2002
Maxey Flats Disposal Site, Morehead, KY

Provided by
Shaw Environmental, Inc.
312 Directors Drive, Knoxville, Tennessee 37923, (865) 690-3211

This certifies that Mary Komman attended a total of 2 hours field training regarding data down load of the Settling Private Party designated data loggers.

Rich Newton
Shaw Environmental, Inc.

Lin Liu
Shaw Environmental, Inc.

CERTIFICATE OF ATTENDANCE

Title: Sump Lid and Data Logger Training

Installation of the Extended Sump Lids - Classroom and Field Training, *by* Rich Newton

Installation and Calibration of the Settling Private Party Designated Data Loggers - Field Training, *by* Rich Newton

Data Down Load of the Settling Private Party Designated Data Loggers - Classroom and Field Training, *by* Lin Liu

October 1 and 18, 2002; November 8, 2002
Maxey Flats Disposal Site, Morehead, KY

Provided by
Shaw Environmental, Inc.
312 Directors Drive, Knoxville, Tennessee 37923, (865) 690-3211

This certifies that Donny Pollitt attended a total of 8 hours classroom and field training regarding 1) installation of the Settling Private Party and Commonwealth of Kentucky designated sump lids, 2) installation and calibration of the Settling Private Party designated data loggers, and 3) data down load of the Settling Private Party designated data loggers.

Rich Newton
Shaw Environmental, Inc.

Lin Liu
Shaw Environmental, Inc.

CERTIFICATE OF ATTENDANCE

Title: Sump Lid and Data Logger Training

Installation of the Extended Sump Lids - Classroom and Field Training, *by* Rich Newton

Installation and Calibration of the Settling Private Party Designated Data Loggers - Field Training, *by* Rich Newton

Data Down Load of the Settling Private Party Designated Data Loggers - Classroom and Field Training, *by* Lin Liu

October 1 and 18, 2002
Maxey Flats Disposal Site, Morehead, KY

Provided by
Shaw Environmental, Inc.
312 Directors Drive, Knoxville, Tennessee 37923, (865) 690-3211

This certifies that Jeff Stamper attended a total of 6 hours classroom and field training regarding 1) installation of the Settling Private Party and Commonwealth of Kentucky designated sump lids, 2) installation and calibration of the Settling Private Party designated data loggers, and 3) data down load of the Settling Private Party designated data loggers.

Rich Newton
Shaw Environmental, Inc.

Lin Liu
Shaw Environmental, Inc.

CERTIFICATE OF ATTENDANCE

Title: Sump Lid and Data Logger Training

Installation of the Extended Sump Lids - Classroom and Field Training, *by* Rich Newton

Installation and Calibration of the Settling Private Party Designated Data Loggers - Field Training, *by* Rich Newton

Data Down Load of the Settling Private Party Designated Data Loggers - Classroom and Field Training, *by* Lin Liu

October 1 and 18, 2002; November 8, 2002
Maxey Flats Disposal Site, Morehead, KY

Provided by
Shaw Environmental, Inc.
312 Directors Drive, Knoxville, Tennessee 37923, (865) 690-3211

This certifies that Tom Stewart attended a total of 8 hours classroom and field training regarding 1) installation of the Settling Private Party and Commonwealth of Kentucky designated sump lids, 2) installation and calibration of the Settling Private Party designated data loggers, and 3) data down load of the Settling Private Party designated data loggers.

Rich Newton
Shaw Environmental, Inc.

Lin Liu
Shaw Environmental, Inc.

Isco Flowmeter Training Documentation

Shaw Environmental & Infrastructure, Inc.

Shaw The Shaw Group Inc.™

312 Directors Drive
Knoxville, TN 37922
865-690-3211
Fax: 865-690-3626

Memorandum

Date: Wednesday, February 26, 2003

To: Mike Capps

CC: file, de maximis inc.

From: Sam Mayes

RE: Training for flume monitoring device at MFDS

An ISCO representative (Dan Anderson) performed training for the Commonwealth of Kentucky for the flow measuring device on November 28, 2000. Mr. Anderson discussed operational requirements for the device and the procedure for downloading data from the flow recorder. Jeff Stamper was present to represent the Commonwealth of Kentucky. Myself and Tom Heath were present during the training. Additionally the software program for downloading data was given to the Commonwealth.

Cathodic Protection Training Certificates

CERTIFICATE OF ATTENDANCE

Title: Cathodic Protection Training

Operation and Maintenance of the Cathodic Protection System - *by* Bobby Todd and Chad Fincher with Allied Corrosion Industries.

November 20, 2002
Maxey Flats Disposal Site, Morehead, KY

Provided by
Allied Corrosion Industries on behalf of Shaw Environmental, Inc.
312 Directors Drive, Knoxville, Tennessee 37923, (865) 690-3211

This certifies that Omar Heath attended a total of 1 hour of field demonstration / training regarding operation and maintenance procedures regarding the rectifier and junction box associated with the cathodic protection of the two modified Leachate Storage Facility Tanks remaining for future non-liquid waste disposal by the Commonwealth of Kentucky.

Rich Newton
Shaw Environmental, Inc.

Lin Liu
Shaw Environmental, Inc.

CERTIFICATE OF ATTENDANCE

Title: Cathodic Protection Training

Operation and Maintenance of the Cathodic Protection System - *by* Bobby Todd and Chad Fincher with Allied Corrosion Industries.

November 20, 2002
Maxey Flats Disposal Site, Morehead, KY

Provided by
Allied Corrosion Industries on behalf of Shaw Environmental, Inc.
312 Directors Drive, Knoxville, Tennessee 37923, (865) 690-3211

This certifies that Donny Pollitt attended a total of 1 hour of field demonstration / training regarding operation and maintenance procedures regarding the rectifier and junction box associated with the cathodic protection of the two modified Leachate Storage Facility Tanks remaining for future non-liquid waste disposal by the Commonwealth of Kentucky.

Rich Newton
Shaw Environmental, Inc.

Lin Liu
Shaw Environmental, Inc.

CERTIFICATE OF ATTENDANCE

Title: Cathodic Protection Training

Operation and Maintenance of the Cathodic Protection System - *by* Bobby Todd and Chad Fincher with Allied Corrosion Industries.

November 20, 2002
Maxey Flats Disposal Site, Morehead, KY

Provided by
Allied Corrosion Industries on behalf of Shaw Environmental, Inc.
312 Directors Drive, Knoxville, Tennessee 37923, (865) 690-3211

This certifies that Jeff Stamper attended a total of 1 hour of field demonstration / training regarding operation and maintenance procedures regarding the rectifier and junction box associated with the cathodic protection of the two modified Leachate Storage Facility Tanks remaining for future non-liquid waste disposal by the Commonwealth of Kentucky.

Rich Newton
Shaw Environmental, Inc.

Lin Liu
Shaw Environmental, Inc.

Appendix H – Concrete Specifications provided in Technical Change

H-1 – Cementitious Fill Material - Perimeter Drainage Channels

Cementitious Fill Material in Perimeter Channels

1.0 Performance Criteria

See attached 21NOV02 letter from Engineer of Record addressing the performance criteria and for a copy of the utilized concrete mix design.

2.0 Installation

2.1 Surface Preparation

All cementitious surfaces in contact with the cementitious fill material shall be free of oil, grease, laitance, and other contaminants. Where cementitious fill is placed between the mats, the edge blocks on the AB mat shall be either roughened to ensure good bonding, or a bonding agent should be applied to the side of the block surface. The bonding agent should be a minimum of 1 MM in application thickness, and shall comply with ASTM C1059, Type 1. A typical bonding agent for this purpose is seal tight Intralock® by W.R. Meadows Corporation. The cementitious fill material should be added while the bonding agent is still tacky.

2.2 Mixing

Addition of coarse aggregate (pea gravel) shall be used for any pour greater than 2 inches in depth. Add clean damp coarse aggregate meeting ASTM C33 before final water adjustment. For structural concrete material, use a shrinkage-reducing admixture such as SRA-157 by Russtech at a dosage of 2 percent by weight of cementitious.®

2.3 Placement

Firmly work the cementitious fill material into the gaps and place to the depth specified on the drawings. Placement within gaps between individual AB mats should be continuous to prevent cold joints between pours. Finish as necessary. For pumping procedures, contact a manufacturer's technical representative.

2.4 Special Conditions

For use in cold temperatures, the cementitious fill material must be maintained at a temperature of least 35 degrees F. Protect from freezing per requirements of ACI 306 until a compressive strength of at least 1,000 PSI is obtained. Faster strength gain will occur when the cementitious fill material, mixing water, and coarse aggregate have

been conditioned to a higher temperature prior to placement. In hot temperatures, the cementitious fill material should be kept as cool as possible, but not exceeding 90 degrees F. Ice cold water should be used for mixing to help maintain sufficient working time.

2.5 Post-Placement

2 mils thick layer of Lumiseal Plus®, L&M Construction Chemicals, Inc. or equivalent, shall be applied over the top surface of the cementitious fill material. This precludes the need to keep the top surface moist during the post-placement time period.

3.0 Limitations

3.1 Prior to application, read and follow all manufacturer's instructions thoroughly.

3.2 Never exceed the maximum water content as stated on the package or add an amount that will cause segregation.

3.3 Existing surfaces shall be free of frost and ice.

Shaw Environmental & Infrastructure, Inc.

312 Directors Drive
Knoxville, TN 37923
865.690.3211
FAX 865.690.3626

Shaw The Shaw Group Inc.™

November 21, 2002

Mr. Dave Marcum
Shaw Environmental and Infrastructure
Maxey Flats Disposal Site
Fleming County, Kentucky

Dear Mr. Marcum:

Pursuant to our discussion this afternoon, the following performance criteria is applicable for the "Structural Concrete w/Shrinkage Reducing Admixture" option for the cementious fill in the A.B. mats. This material performance criteria is relevant to TC-147 and 151.

-Minimum 28-day compressive strength = ~~4000 psi~~ #8
-Portland Cement Aggregate per ASTM C33 w/grating requirement for coarse aggregate conforming to size number 57
-Water Cement Ratio = 0.45
-Slump = ~~2~~ to 4" just 4"
-Air Entrainment = 4.5% Air ; +/- 1.5% tolerance
-Shrinkage Reducing Admixture such as SRA-157 by Russ-Tech, w/dosage of 2% by weight of cementitious
-Sampling frequency = 1 sample per day; 4 cylinders shall be collected per sampling event
-Approved concrete supplier shall provide mix designs containing the following information, as a minimum, to the Engineer-of-Record for approval; compressive strength, water to cement ratios, and aggregate size.

Please forward this performance criteria to the local qualified vendor, Wells Concrete of Morehead, KY, to procure a sample mix for our review and approval. Thanks for your attention and assistance in this matter.

Sincerely,
Kevin B Westervelt
Kevin Westervelt, S.E., P.E.
Structural Engineer
Shaw Environmental & Infrastructure, Inc.
Knoxville, Tennessee

COPY

THE WELLS GROUP, LLC
P.O. BOX 28
504 WEST MAIN STREET
WEST LIBERTY, KY 41472-0028
(606) 743-3485

CONCRETE MIX DESIGN
4000 PSI

MIX ID : SHAW/4000SRA [2] 01/09/03

CONTRACTOR : THE SHAW GROUP, INC.
PROJECT : MAXEY FLATS DISPOSAL SITE
SOURCE OF CONCRETE : THE WELLS GROUP, LLC / MOREHEAD PLANT
CONSTRUCTION TYPE : EXTERIOR CONCRETE
PLACEMENT : PUMP

WEIGHTS PER CUBIC YARD (SATURATED, SURFACE-DRY)

		YIELD, CU FT
CEMEX / ASTM C-150 TYPE I/II CEMENT, LB	500	2.54
[illegible] ASH DIRECT / CLASS F FLY ASH, LB	100	0.61
[illegible]ETON SAND & GRAVEL / NATURAL SAND, LB	1300	8.04
THE ROCK GROUP / #8 CRUSHED LIMESTONE, LB	1800	10.80
WATER, LB (GAL-US)	246 (29.5)	3.95
TOTAL AIR, %	4.5 +/- 1.5	1.22
	TOTAL	27.17

RUSSTECH LC-400P / TYPE A WATER REDUCER, OZ	24.00
RUSSTECH FINISHEASE / TYPE A MRWR, OZ-US	48.00
RUSSTECH SRA-157 / SHRINKAGE REDUCER, OZ-US	198.00
RUSSTECH RSA-10 / AIR ENTRAINING AGENT, OZ-	6.0
WATER/CEMENT RATIO, LBS/LB	0.41
SLUMP, IN	4.00
CONCRETE UNIT WEIGHT, PCF	145.2

PREPARED BY : William S. Wells

WILLIAM S. WELLS, EIT, CDT

H-2 – Cementitious Fill Material - Interior Y-Channel

Cementitious Fill Material in the Interior Y-Channel

1.0 Performance Criteria

See attached 22MAY03 letter from Engineer of Record addressing the performance criteria and for a copy of the utilized concrete mix design.

2.0 Installation

2.1 Surface Preparation

All cementitious surfaces in contact with the cementitious fill material shall be free of oil, grease, laitance, and other contaminants. Where cementitious fill is placed between the mats, the edge blocks on the AB mat shall be either roughened to ensure good bonding, or a bonding agent should be applied to the side of the block surface. The bonding agent should be a minimum of 1 MM in application thickness, and shall comply with ASTM C1059, Type 1. A typical bonding agent for this purpose is seal tight Intralock® by W.R. Meadows Corporation. The cementitious fill material should be added while the bonding agent is still tacky.

2.2 Mixing

Addition of coarse aggregate (pea gravel) shall be used for any pour greater than 2 inches in depth. Add clean damp coarse aggregate meeting ASTM C33 before final water adjustment. For structural concrete material, use a shrinkage-reducing admixture such as SRA-157 by Russtech at a dosage of 2 percent by weight of cementitious.®

2.3 Placement

Firmly work the cementitious fill material into the gaps and place to the depth specified on the drawings. Placement within gaps between individual AB mats should be continuous to prevent cold joints between pours. Finish as necessary. For pumping procedures, contact a manufacturer's technical representative.

2.4 Special Conditions

For use in cold temperatures, the cementitious fill material must be maintained at a temperature of least 35 degrees F. Protect from freezing per requirements of ACI 306 until a compressive strength of at least 1,000 PSI is obtained. Faster strength gain will occur when the cementitious fill material, mixing water, and coarse aggregate have

been conditioned to a higher temperature prior to placement. In hot temperatures, the cementitious fill material should be kept as cool as possible, but not exceeding 90 degrees F. Ice cold water should be used for mixing to help maintain sufficient working time.

2.5 Post-Placement

2 mils thick layer of Lumiseal Plus®, L&M Construction Chemicals, Inc. or equivalent, shall be applied over the top surface of the cementitious fill material. This precludes the need to keep the top surface moist during the post-placement time period.

3.0 Limitations

3.1 Prior to application, read and follow all manufacturer's instructions thoroughly.

3.2 Never exceed the maximum water content as stated on the package or add an amount that will cause segregation.

3.3 Existing surfaces shall be free of frost and ice.

Shaw Environmental & Infrastructure, Inc

312 Directors Drive
Knoxville, TN 37923
865.690.3211
FAX 865.690.3626

Shaw The Shaw Group Inc.™

Memorandum

Date: 22MAY03

To: Mike Capps, Sam Mayes

CC: File, *de maximis, inc.*

From: Kevin Westervelt KBW

RE: Clarification for Cementitious Fill Requirements for the Y-Channel at Maxey Flats Disposal Site (Technical Change 161 – AB Mat Enhancement along the Interior Y-Channel)

In this particular application along the Y-Channel, the cementitious fill must be pumped a considerable distance (approximately 900 feet) from the concrete truck through two pumps to the farthest point of placement. This is being done as a protective measure to avoid having any heavy construction vehicles drive into and along the EDB. The cementitious fill mix properties will change over the length of the Y-Channel due to varying pumping pressure requirements. The required pumping pressure will lessen as work progresses toward the lower end of the Y-Channel. Based on these specific job requirements, the cementitious fill mix specifications must be altered from the mix design accepted on previous cementitious fill work for TC 147 (Southeast Channel) and TC 151 (North Channel). Installation of the cementitious fill shall still be in accordance with Figure 7 of TC 151.

The cementitious fill compressive strength shall meet a minimum 28-day requirement of 3,000 psi in accordance with Specification 03300 - Concrete. A minimum 3,000-psi compressive strength is consistent with U.S. Army Corps of Engineering general recommendations for concrete flood control channels. The strength requirement is the most prominent performance parameter of the end product. Other concrete parameters such as slump primarily impact the workability of the concrete, and thus have a wider variance as long as the compressive strength requirements are maintained. For the purposes of this application, the following slump and air content parameters apply. The slump at the point of placement shall be in the range of 3 – 7 inches. The air content at the point of placement shall be in the range of 4 – 8 percent. The mix design will account for typical changes incurred over the length of the pumped product such that the compressive strength requirement of the end product is maintained. As an added measure, the super plasticizer used to maintain strength will be added at the job site in lieu of the batch plant. This will provide more time for concrete placement following site delivery. The mix will be approved by me prior to placement.

THE WELLS GROUP, LLC
P.O. BOX 28
505 WEST MAIN STREET
WEST LIBERTY, KY 41472-0028
(606) 743-3485

CONCRETE MIX DESIGN

MIX ID : SHAW/4000SRA [3] 4000 PSI 05/20/03

CONTRACTOR : THE SHAW GROUP, INC.
PROJECT : MAXEY FLATS DISPOSAL SITE
SOURCE OF CONCRETE : THE WELLS GROUP, LLC / MOREHEAD PLANT
CONSTRUCTION TYPE : EXTERIOR CONCRETE
PLACEMENT : PUMP

WEIGHTS PER CUBIC YARD (SATURATED, SURFACE-DRY)

		YIELD, CU FT
CEMEX / ASTM C-150 TYPE I/II CEMENT, LB	560	2.85
FLY ASH DIRECT / CLASS F FLY ASH, LB	140	0.86
PIKETON SAND & GRAVEL / NATURAL SAND, LB	1353	8.37
E ROCK GROUP / #8 CRUSHED LIMESTONE, LB	1400	8.40
TER, LB (GAL-US)	309 (37.0)	4.95
TOTAL AIR, %	6.5 +/- 2.5	1.77
	TOTAL	27.20

RUSSTECH LC-400R / TYPE A WATER REDUCER, OZ	28.00
RUSSTECH SUPERFLO 443 / TYPE F HRWR, OZ-US	84.00
RUSSTECH SRA-157 / SHRINKAGE REDUCER, OZ-US	231.00
RUSSTECH RSA-10 / AIR ENTRAINING AGENT, OZ-	17.5
WATER/CEMENT RATIO, LBS/LB	0.44
SLUMP, IN	5.00
CONCRETE UNIT WEIGHT, PCF	138.3

5 INCH SLUMP ON THE JOB; ADD SUPERPLASTICIZER TO RAISE TO 10 INCH SLUMP.

PREPARED BY : William S. Wells

WILLIAM S. WELLS, EIT, CDT

PSI: 4000 PSI Mix: SHAW/4000SRA 05/20/03

MIX ANALYSIS

MIX VOLUME, CU FT	27.20
COARSENESS (Q / (Q + I))	5.8
WORKABILITY	41.2
W - ADJUST	44.8
PERCENT MORTAR	63.8

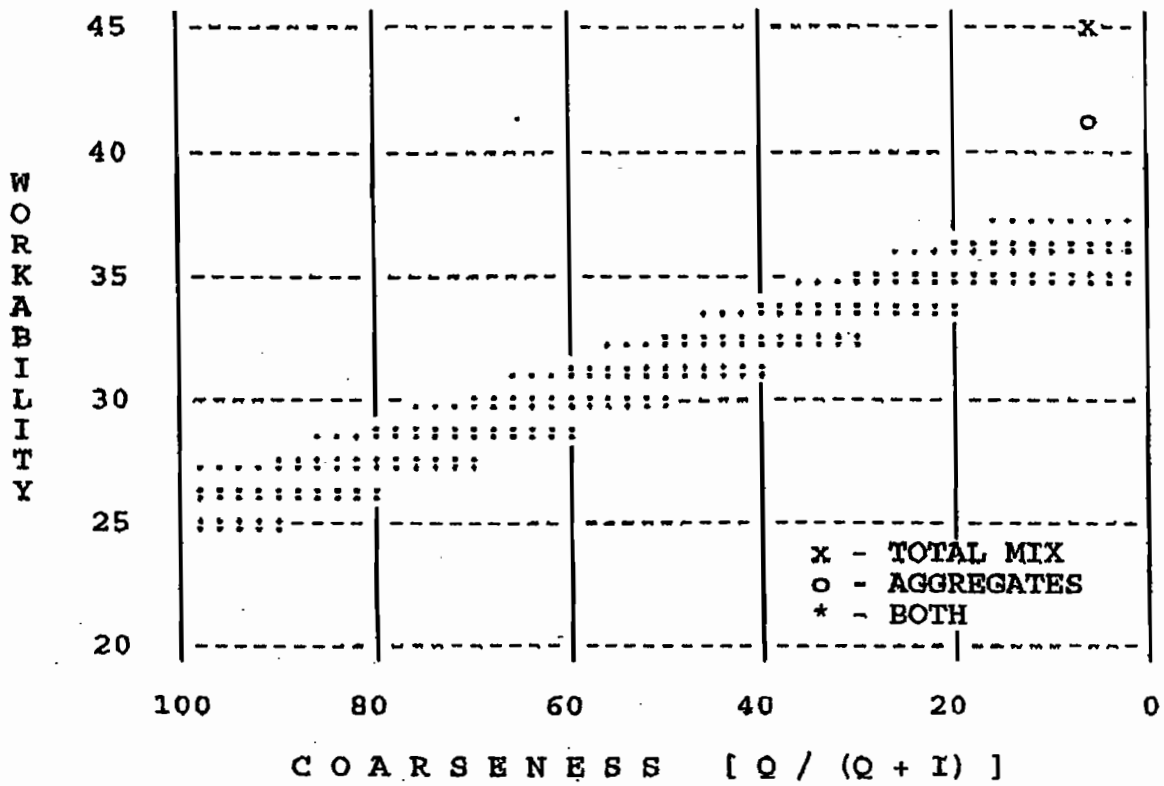

MATERIALS CHARACTERISTICS

	STONE	SAND
DENSITY, SP G	2.67	2.59
% PASSING 3/8 " SIEVE	93.2	100.0
% PASSING # 8 SIEVE	1.6	81.0
FINENESS MODULUS	0.00	0.00
PERCENT OF AGGREGATE	50.1	49.9

MINERAL ADMIXTURE DENSITY, SP G 2.61

ANY SECTION -- WET / FREEZING

H-3 – Concrete Material - Y-Channel Outfall

Concrete Material – Y-Channel Outfall

See the attachment for the utilized concrete mix design.

1.0 Concrete Criteria

1.1 All concrete materials, construction, and workmanship shall conform to American Concrete Institute (ACI) Code 318, as well as all local laws and ordinances.

1.2 Concrete mixes shall be documented by a qualified testing laboratory and submitted to the Engineer of Record for approval prior to utilization. The concrete mix design shall include conformance to the following parameters as a minimum:

- Minimum 28-day compressive strength = 4,000 psi
- Slump = 4 inches +/-1 inch tolerance
- Water/cement ratio = 0.47
- Air Entrainment = 5.5% air: +/-1.5% tolerance
- Aggregate size = ASTM C33 with grating requirement for coarse aggregate conforming to size Number 57.

1.3 Portland cement in concrete mix shall conform to ASTM C-150, Type Air-Entrained.

1.4 Concrete mixing operations shall conform to ASTM C –94. All concrete shall be vibrated.

1.5 Concrete placement shall conform to ACI 301 and the project specifications.

1.6 Testing of concrete shall be per ACI 301 specifications for structural concrete for buildings: Minimum one sample per day: 4 cylinders shall be collected per sampling event.

1.7 All reinforcing bars, anchor bolts, and other concrete inserts shall be well secured in position prior to placing concrete. Cutting of rebar and concrete coring is not permitted without prior approval from the Engineer of Record.

1.8 Formwork and shoring shall remain in place until the concrete has reached 95% of its minimum 28-day compressive strength.

1.9 Fly ash content shall not exceed 20% of the total weight of cement plus fly ash for Class F, or 30% of the total weight of cement plus fly ash for Class C.

1.10 The top surface of the concrete channel shall be provided with a light broom finish. The concrete channel shall be cured by the application of a liquid membrane-forming curing compound (white pigmented) upon completion of the concrete finish.

1.11 The manufacture, placement, testing and finishing of concrete shall conform to the requirements of specification Section 03300. For performance criteria that may conflict with the notes on this drawing (e.g., 28-day minimum compressive strength). The drawing notes shall govern.

1.12 Concrete shall be pumped to the concrete channel from the perimeter road during placement. Care shall be taken by the subcontractor to avoid damaging the outlet drain pipes.

THE WELLS GROUP, LLC
P.O. BOX 28
505 WEST MAIN STREET
WEST LIBERTY, KY 41472-0028
(606) 743-3485

CONCRETE MIX DESIGN

MIX ID : MAXEY/SHAW/4000 [1] 4000 PSI 04/02/03

CONTRACTOR : SHAW ENVIRONMENTAL
PROJECT : MAXEY FLATS / Y-CHANNEL INTO EDB
SOURCE OF CONCRETE : THE WELLS GROUP, LLC - MOREHEAD PLANT

WEIGHTS PER CUBIC YARD (SATURATED, SURFACE-DRY)

			YIELD, CU FT
CEMEX / ASTM C-150 TYPE I/II CEMENT, LB	485		2.47
FLY ASH DIRECT / CLASS F FLY ASH, LB	95		0.59
PIKETON SAND & GRAVEL / NATURAL SAND, LB	1189		7.36
THE ROCK GROUP / #57 CRUSHED LIMESTONE, LB	1525		9.12
HE ROCK GROUP / #8 CRUSHED LIMESTONE, LB	300		1.80
ATER, LB (GAL-US)	267	(32.0)	4.28
TOTAL AIR, %	5.5	+/- 1.5	1.49
		TOTAL	27.10

RUSSTECH LC-400P / TYPE A WATER REDUCER, OZ	23.20
RUSSTECH FINISHEASE / MRWR, OZ-US	23.20
RUSSTECH RSA-10 / AIR ENTRAINING AGENT, OZ-	5.8
WATER/CEMENT RATIO, LBS/LB	0.46
SLUMP, IN	4.00
CONCRETE UNIT WEIGHT, PCF	142.5

PREPARED BY : William S. Wells

WILLIAM S. WELLS, EIT, CDT

Mix Accepted by Kevin Westervelt, S.E, P.E 4/2/03

pet: 4000 PSI Mix: MAXEY/SHAW/4000 04/02/03

MIX ANALYSIS

MIX VOLUME, CU FT	27.10
COARSENESS (Q / (Q + I))	58.6
WORKABILITY	35.9
W - ADJUST	36.3
PERCENT MORTAR	56.8
TOTAL FINENESS MODULUS	5.14

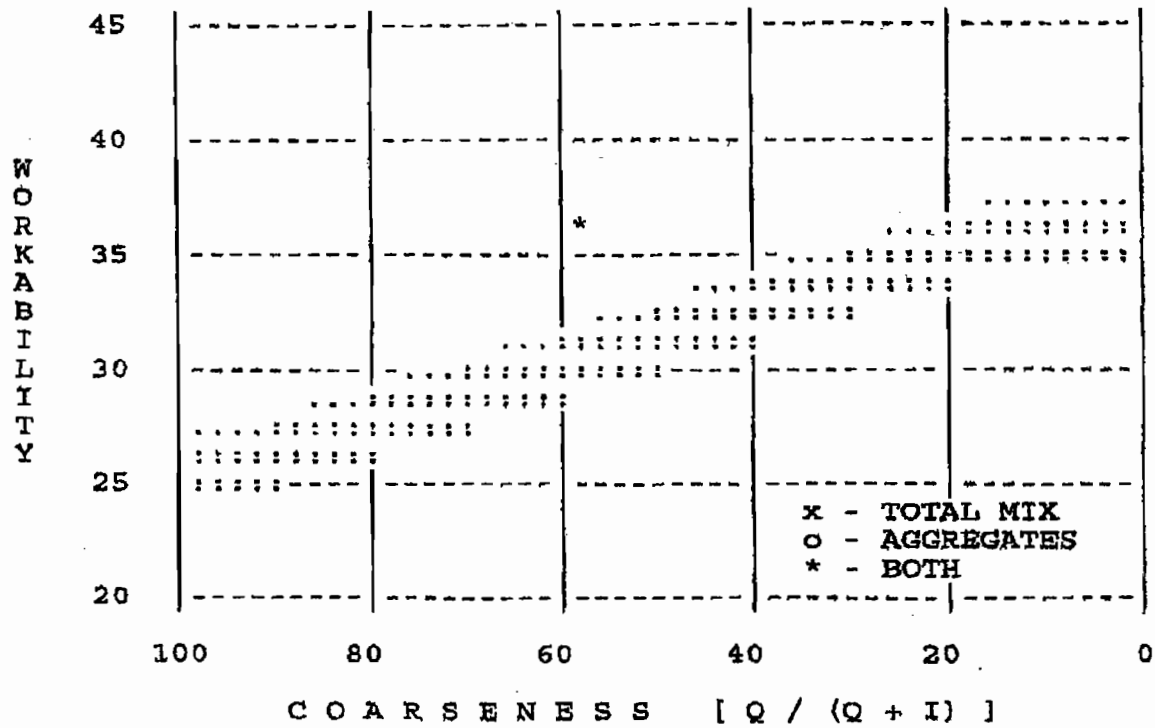

MATERIALS CHARACTERISTICS

	STONE 1	STONE 2	SAND
DENSITY, SP G	2.68	2.67	2.59
% PASSING 3/8 " SIEVE	26.3	92.1	100.0
% PASSING # 8 SIEVE	3.3	8.8	83.0
FINENESS MODULUS	6.81	5.76	2.91
PERCENT OF AGGREGATE	49.9	9.9	40.3

MINERAL ADMIXTURE DENSITY, SP G 2.60

ANY SECTION -- WET / FREEZING

PSI: 4000 PSI Mix: MAXEY/SHAW/4000 04/02/03

MATERIALS DISTRIBUTION

SIEVE	STONE 1	STONE 2	SAND	PASTE	TOTAL	AGGR
1-1/2 "	100.0				-	-
1 "	99.2				0.3	0.4
3/4 "	82.4				5.7	8.4
1/2 "	45.1	100.0			12.6	18.6
3/8 "	26.3	92.1	100.0		6.9	10.2
# 4	6.9	21.4	97.0		12.0	17.9
# 8	3.3	8.8	83.0		5.8	8.7
# 16	-	1.7	65.0		6.5	9.6
# 30	-	-	41.0		6.6	9.8
# 50	-	-	21.0		5.4	8.1
# 100	-	-	2.0		5.2	7.6
# 200	-	-	1.0	100.0	0.3	0.4
# 325	-	-	-	95.5	1.7	0.4
Liquid	-	-	-	65.4	9.8	-

MATERIALS DISTRIBUTION CHART BY SIEVE

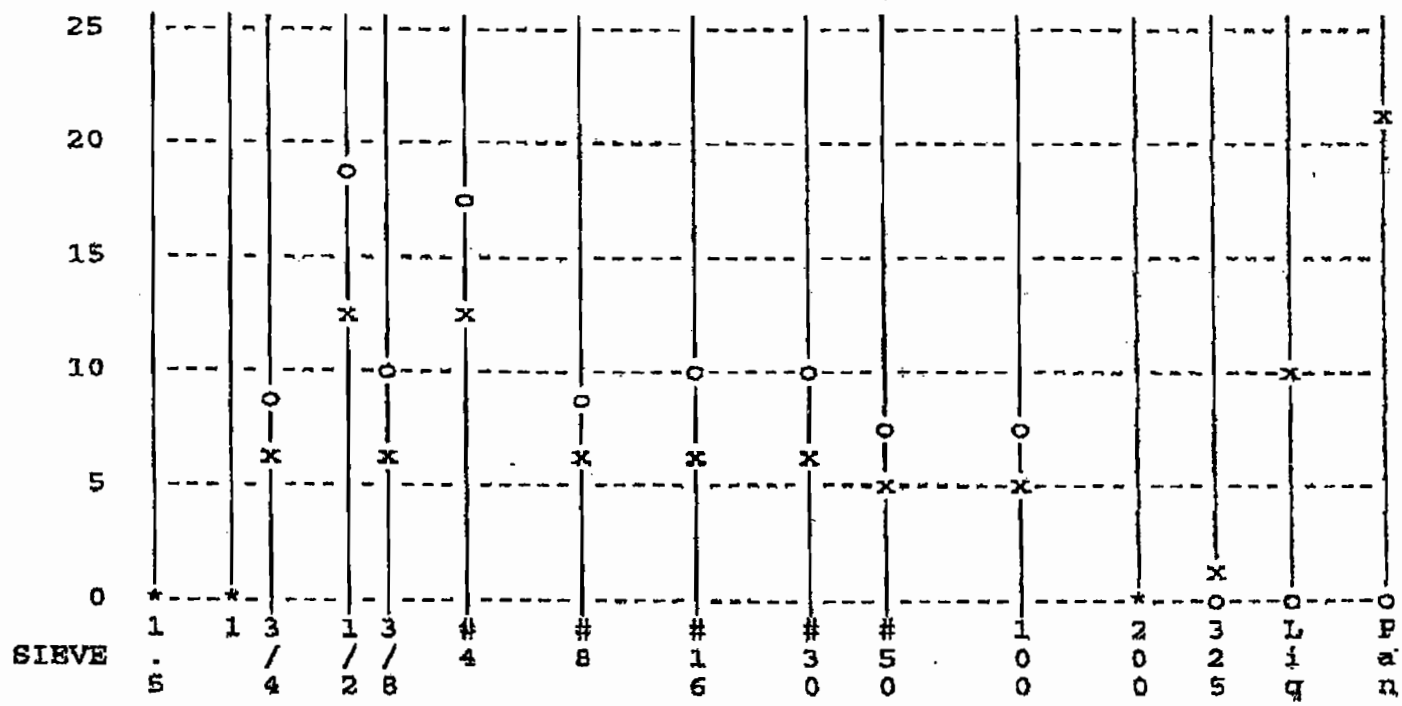

x - ALL COMPONENTS o - AGGREGATES * - BOTH

Appendix I – As-Built Drawings upon IRP Cap Completion

MAXEY FLATS DISPOSAL SITE

FLEMING COUNTY, KENTUCKY

(AS-BUILT DRAWINGS)

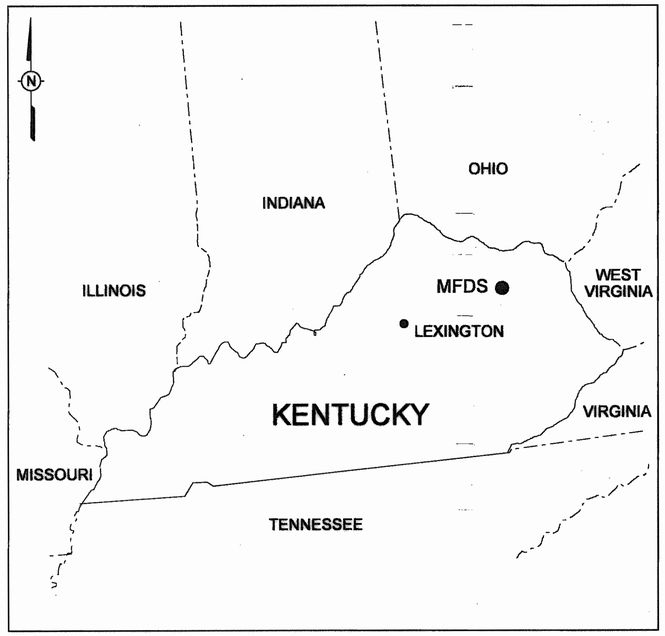

REGIONAL MAP

NOT TO SCALE

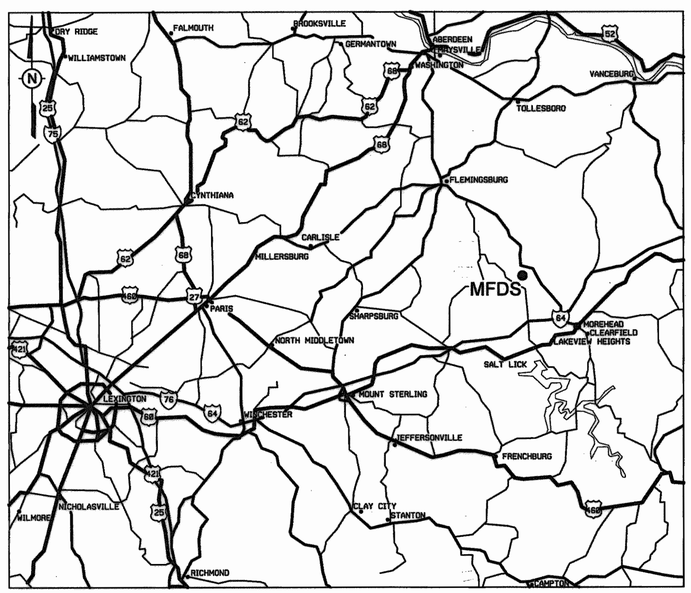

VICINITY MAP

NOT TO SCALE

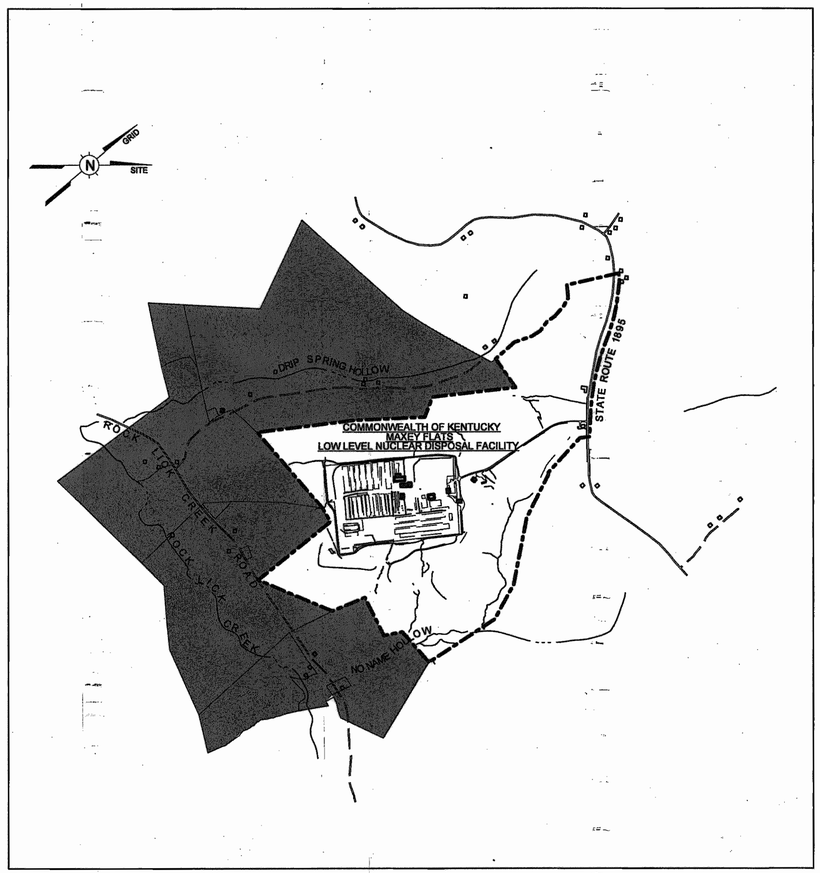

PROJECT LOCATION

SCALE: 1" = 1000'

NO	DATE	REVISION	ASBLT BY	DR BY	CHKD	ENGR	PROJ MGR	APPR
0	06/17/03	AS-BUILT	JW	JW	LS			

Shaw Shaw Environmental, Inc.

AS-BUILT BY: JW Watson
CHECKED BY:
ENGINEER/SURVEYOR APPROVAL:
DRAWN BY: JW Watson
DRAFTING CHECK BY:
PROJECT MANAGER:

CONFIDENTIAL PROPERTY OF
SHAW ENVIRONMENTAL, INC.

THIS DRAWING AND ALL INFORMATION THEREON IS CONFIDENTIAL AND MUST NOT BE MADE PUBLIC OR COPIED UNLESS DULY AUTHORIZED, SHALL NOT BE USED EXCEPT FOR THE PURPOSE FOR WHICH IT WAS SUPPLIED, AND IS SUBJECT TO RETURN ON DEMAND. ALL RIGHTS OF INVENTION OR DESIGN ARE RESERVED.

MAXEY FLATS DISPOSAL SITE
FLEMING COUNTY, KENTUCKY

COVER SHEET
(AS-BUILT)

STATE OF KENTUCKY SAMUEL R. MAYES 20997 LICENSED PROFESSIONAL ENGINEER
6-17-03

STATE OF KENTUCKY RUSSELL B. WINTON 3674 LICENSED PROFESSIONAL LAND SURVEYOR
6/17/03

ENGINEER / SURVEYOR SEAL

STARTING DATE	JOB NO.	DRAWING NO.	REV
4/17/03	838409	AB-1	0

AS-BUILT DRAWING INDEX

DRAWING NO.	DRAWING TITLE
AB-1	COVER SHEET
AB-2	AS-BUILT DRAWING INDEX, DESIGN DRAWING INDEX, AND TOPO DRAWINGS KEY PLAN
AB-3	GENERAL NOTES, LEGEND, ABBREVIATIONS AND BUILDING IDENTIFICATION TABLE
AB-4	OVERALL SITE TOPO
AB-5	SITE TOPO SHEET 1 OF 4
AB-6	SITE TOPO SHEET 2 OF 4
AB-7	SITE TOPO SHEET 3 OF 4
AB-8	SITE TOPO SHEET 4 OF 4
AB-9	UTILITIES
AB-10	SUMP AND WELL ABANDONMENT LOCATIONS
AB-11	SUMP AND WELL ABANDONMENT LOCATIONS
AB-12	EXISTING SUMP EXTENSION LOCATIONS
AB-13	SUMP TABLES
AB-14	SUMP MODIFICATION DETAILS
AB-15	ALLUVIAL WELL LOCATIONS, DETAIL, AND TABLE
AB-16	GEOMEMBRANE LINER PANEL LAYOUT
AB-17	GEOMEMBRANE LINER AND CHANNEL TREATMENT SECTIONS
AB-18	GEOMEMBRANE LINER AND CHANNEL TREATMENT SECTIONS AND DETAILS
AB-19	EAST DETENTION BASIN TOPO
AB-20	EAST DETENTION BASIN SECTION AND DETAILS
AB-21	EAST DETENTION BASIN H-FLUME SECTION AND DETAIL
AB-22	EAST DETENTION BASIN H-FLUME SECTIONS AND DETAILS
AB-23	EDB Y-CHANNEL OUTLET DETAIL AND PROFILE
AB-24	EDB Y-CHANNEL OUTLET SECTIONS AND DETAILS
AB-25	EDB Y-CHANNEL OUTLET SECTIONS AND DETAILS
AB-26	EMC BUNKER TOP OF SUBGRADE, DRAIN PIPE, AND STABILIZATION TRENCH
AB-27	EMC BUNKER TOP OF FLOOR SLAB
AB-28	EMC BUNKER WALLS
AB-29	EMC BUNKER ROOF
AB-30	EMC BUNKER FOUNDATION DRAIN SECTIONS AND DETAILS
AB-31	EMC BUNKER TYPICAL SECTIONS
AB-32	NORTH CHANNEL PROFILE AND DETAILS
AB-33	NORTH CHANNEL DETAILS AND SECTIONS
AB-34	NORTH CHANNEL DETAILS AND SECTIONS
AB-35	NORTH CHANNEL DETAILS AND SECTIONS
AB-36	SOUTHEAST CAP DETAILS AND SECTION
AB-37	EAST MAIN CHANNEL TOPO AND SECTION
AB-38	EAST MAIN CHANNEL EROSION MONITORING CROSS-SECTION LAYOUT
AB-39	EAST MAIN CHANNEL EROSION MONITORING CROSS-SECTIONS
AB-40	EAST MAIN CHANNEL EROSION MONITORING CROSS-SECTIONS
AB-41	LSF TANKS LAYOUT, SECTIONS AND DETAILS
AB-42	DAW LOCATION AND BUILDING FOUNDATION ABANDONMENT
AB-43	BORROW PIT AREA
AB-44	MISCELLANEOUS DETAILS

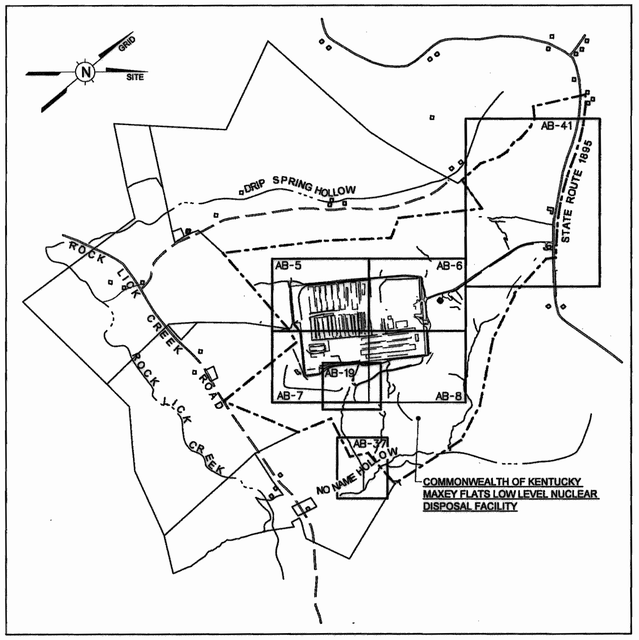

TOPO DRAWING KEY PLAN

SCALE: 1" = 1000'

DESIGN DRAWING INDEX

DRAWING NO.	DRAWING TITLE	LEACHATE REMOVEL/DISPOSAL	REMAINING WORK	AS-BUILT DWG CROSS REFERENCE
G1	COVER SHEET	X	X	AB-1
G1A	DRAWING INDEX		X	AB-2
G2	GENERAL NOTES, LEGEND AND ABBREVIATIONS	X		AB-3
G2A	GENERAL NOTES, LEGEND AND ABBREVIATIONS		X	
C1	OVERALL SITE PLAN - EXISTING CONDITION	X		N/A
C2	SITE LAYOUT PLAN - EXISTING CONDITION	X		(AB-10) - (AB-13)
C3	SITE LAYOUT PLAN - EXISTING UTILITY CONDITION - SHEET 1 OF 2	X		AB-9
C4	SITE LAYOUT PLAN - EXISTING UTILITY CONDITION - SHEET 2 OF 2	X		
C5	SITE LAYOUT PLAN - LR/D SITE MODIFICATIONS (NW)	X		(AB-9) & (AB-41)
C6	SITE LAYOUT PLAN - LR/D SITE MODIFICATIONS (SE)	X		
C7	BUNKER FOUNDATION DRAINAGE - LAYOUT - SHEET 1	X		(AB-26) & (AB-30)
C8	BUNKER FOUNDATION DRAINAGE - LINER LAYOUT - SHEET 2	X		
C9	BUNKER FOUNDATION DRAINAGE - LAYOUT - SHEET 3	X		
C10	BUNKER FOUNDATION DRAINAGE - LAYOUT - SHEET 4	X		
C11	BUNKER FOUNDATION DRAINAGE - SECTION AND DETAILS	X		
C12	LEACHATE REMOVAL CONVEYANCE SYSTEM - OVERALL SITE PLAN	X		NOTE 1
C13	LEACHATE REMOVAL CONVEYANCE SYSTEM - DETAILED AREAS - SHEET 1	X		
C14	LEACHATE REMOVAL CONVEYANCE SYSTEM - DETAILED AREAS - SHEET 2	X		
C15	LEACHATE REMOVAL CONVEYANCE SYSTEM - DETAILS - SHEET 1	X		
C16	LEACHATE REMOVAL CONVEYANCE SYSTEM - DETAILS - SHEET 2	X		
C17	LEACHATE REMOVAL CONVEYANCE SYSTEM - DETAILS - SHEET 3	X		
C18	DEMOLITION PLAN		X	AB-9
C19	MONITORING WELL REMEDIAL ACTION PLAN		X	(AB-10) - (AB-13)
C20	SITE LAYOUT PLAN-EXISTING CONDITION AFTER THE LR/D PHASE		X	N/A
C21	INTERIM CAP OVERALL SITE GRADING PLAN		X	(AB-4) - (AB-8)
C22	INTERIM CAP GRADING PLAN SHEET 1 OF 4		X	
C23	INTERIM CAP GRADING PLAN SHEET 2 OF 4		X	
C24	INTERIM CAP GRADING PLAN SHEET 3 OF 4		X	
C25	INTERIM CAP GRADING PLAN SHEET 4 OF 4		X	
C26	INTERIM CAP CROSS-SECTION SHEET 1 OF 4		X	N/A
C27	INTERIM CAP CROSS-SECTION SHEET 2 OF 4		X	
C28	INTERIM CAP CROSS-SECTION SHEET 3 OF 4		X	
C29	INTERIM CAP CROSS-SECTION SHEET 4 OF 4		X	
C30	INTERIM CAP LINER ANCHORAGE PLAN		X	(AB-4) - (AB-8)
C31	INTERIM CAP LINER ANCHORAGE DETAILS		X	(AB-16) - (AB-18)
C32	INTERIM CAP CHANNEL TREATMENT PLAN SHEET 1 OF 2		X	
C33	INTERIM CAP CHANNEL TREATMENT PLAN SHEET 2 OF 2		X	
C34	INTERIM CAP CHANNEL TREATMENT SECTIONS		X	
C35	INTERIM CAP CHANNEL TREATMENT SECTIONS AND DETAILS		X	NOTE 2
C36	INTERIM CAP COORDINATE TABLES SHEET 1 OF 2		X	N/A
C37	INTERIM CAP COORDINATE TABLES SHEET 2 OF 2		X	
C38	INTERIM CAP NEW FENCING PLAN		X	(AB-5) - (AB-8)
C39	INTERIM CAP NEW FENCING DETAILS		X	AB-44
C40	EAST DETENTION BASIN TEMPORARY BASIN GRADING PLAN		X	(AB-19) - (AB-25)
C41	EAST DETENTION BASIN EMBANKMENT FOUNDATION GRADING PLAN		X	
C42	EAST DETENTION BASIN AND EMBANKMENT GRADING PLAN		X	
C43	EAST DETENTION BASIN EMERGENCY SPILLWAY PLAN, PROFILE, AND SECTIONS		X	
C44	EAST DETENTION BASIN EMERGENCY SPILLWAY CONCRETE DETAILS AND SECTIONS		X	
C45	EAST DETENTION BASIN PRINCIPAL SPILLWAY/OUTLET WORK PLAN AND PROFILE		X	
C46	EAST DETENTION BASIN PRINCIPAL SPILLWAY/OUTLET WORK RISER DETAILS		X	
C47	EAST DETENTION BASIN-PRINCIPAL SPILLWAY/OUTLET WORK H-FLUME STRUCTURE DETAILS-SHEET 1 OF 2		X	
C48	EAST DETENTION BASIN-PRINCIPAL SPILLWAY/OUTLET WORK H-FLUME STRUCTURE DETAILS-SHEET 2 OF 2		X	
C49	EAST DETENTION BASIN TEMPORARY BASIN-DETAILS		X	
C50	EAST DETENTION BASIN CROSS-SECTIONS STA 0+65 TO 1+00		X	
C51	EAST DETENTION BASIN CROSS-SECTIONS STA 1+50 TO 2+50		X	
C52	EAST DETENTION BASIN CROSS-SECTIONS STA 3+00 TO 4+00		X	
C53	NORTH CHANNEL-PLAN AND PROFILE		X	(AB-32) - (AB-35)
C54	NORTH CHANNEL CROSS-SECTIONS STA 0+00 TO 7+00		X	(AB-16) - (AB-18)
C55	NORTH CHANNEL SECTIONS AND DETAILS		X	
C56	EAST MAIN CHANNEL PLAN		X	AB-37
C56A	EAST MAIN CHANNEL EROSION MONITORING CROSS-SECTION LAYOUT		X	AB-38
C57	SOUTHEAST CAP ROUGH GRADING PLAN		X	(AB-7) - (AB-36)
C57A	SOUTHEAST CAP CONTROL POINTS		X	
C58	SOUTHEAST CAP FINISH GRADING PLAN		X	
C59	SOUTHEAST CAP DETAILS AND SECTIONS		X	
C60	INTERIM CAP-DETAILS		X	AB-45
C61	INTERIM CAP-STORM SEWER PROFILE, SECTION, AND DETAILS		X	(AB-32) - (AB-35)
C62	HEADWALL DETAILS AND SECTIONS SHEET 1 OF 3		X	
C63	HEADWALL DETAILS AND SECTIONS SHEET 2 OF 3		X	
C64	HEADWALL DETAILS AND SECTIONS SHEET 3 OF 3		X	
C65	INTERIM CAP-EXISTING SUMP MODIFICATION DETAILS		X	AB-14
S1	LEACHATE STORAGE SOLIDIFICATION FACILITY - PLAN & DETAILS	X		
S2	LEACHATE SOLIDIFICATION SYSTEM SLAB - PLAN, SECTION & DETAILS	X		
S3 (SEE NOTE 3)	EMC BUNKERS - FOUNDATION SLAB PLAN	X		(AB-27) - (AB-29) AND (AB-31)
S4 (SEE NOTE 3)	EMC BUNKERS - FOUNDATION SLAB - SECTIONS AND DETAILS	X		
S5 (SEE NOTE 3)	EMC BUNKERS - PHASE 1 FOUNDATION SLAB - REINFORCEMENT LAYOUT	X		
S6 (SEE NOTE 3)	EMC BUNKERS - PHASE 2 FOUNDATION SLAB - REINFORCEMENT LAYOUT	X		
S7 (SEE NOTE 3)	EMC BUNKERS - WALLS - PLAN, SECTION & ELEVATION	X		
S8 (SEE NOTE 3)	EMC BUNKERS - WALLS - DETAILS AND SECTIONS	X		
S9 (SEE NOTE 3)	EMC BUNKERS - ROOF SLAB - PLAN	X		
S10 (SEE NOTE 3)	EMC BUNKERS - ROOF SLAB - SECTION & DETAILS	X		
S11 (SEE NOTE 3)	EMC BUNKERS - ROOF SLAB - REINFORCEMENT LAYOUT	X		
S12	PHASE 2 EMC BUNKERS - FOUNDATION SLAB PLAN	X		
S13	PHASE 2 EMC BUNKERS - FOUNDATION SLAB - SECTIONS & DETAILS	X		
S14	EMC BUNKERS - PHASE 2A FOUNDATION SLAB - REINFORCEMENT LAYOUT	X		
S15	EMC BUNKERS - PHASE 2B FOUNDATION SLAB - REINFORCEMENT LAYOUT	X		NOTE 2
S16	PHASE 2 EMC BUNKERS - WALLS - PLAN AND SECTIONS	X		(AB-28) - (AB-31)
S17	PHASE 2 EMC BUNKERS - WALLS - DETAILS & SECTIONS	X		
S18	PHASE 2 EMC BUNKERS - ROOF SLAB - PLAN	X		
S19	PHASE 2 EMC BUNKERS - ROOF SLAB - SECTION & DETAILS	X		
S20	PHASE 2 EMC BUNKERS - ROOF SLAB - REINFORCEMENT LAYOUT	X		
E1	ELECTRICAL - SYMBOL SHEET	X		NOTE 1
E2	ELECTRICAL SITE PLAN	X		
E3	ELECTRICAL - ONE LINE DIAGRAM SHEET 1 OF 2	X		
E5	ELECTRICAL - SCHEMATIC DIAGRAM SHEET 1 OF 6	X		
E6	ELECTRICAL - SCHEMATIC DIAGRAM SHEET 2 OF 6	X		
E7	ELECTRICAL - SCHEMATIC DIAGRAM SHEET 3 OF 6	X		
E8	ELECTRICAL - SCHEMATIC DIAGRAM SHEET 4 OF 6	X		
E9	ELECTRICAL - SCHEMATIC DIAGRAM SHEET 5 OF 6	X		
E10	ELECTRICAL - SCHEMATIC DIAGRAM SHEET 6 OF 6	X		
E11	ELECTRICAL CONTROL LOGIC DIAGRAM	X		
E12	ELECTRICAL - DETAILS	X		
E13	INTERIM CAP-ELECTRICAL ROUTING PLAN	X		
E14	INTERIM CAP-ELECTRICAL DETAILS		X	AB-10
P1	PROCESS FLOW DIAGRAM LEACHATE REMOVAL		X	N/A
P2	P & ID SYMBOL LEGEND	X		NOTE 1
P3	P & ID SYMBOL LEGEND	X		
P4	PIPING & INSTRUMENTATION DIAGRAM LEACHATE REMOVAL & CONVEYANCE SYSTEM	X		
P5	PROCESS FLOW DIAGRAM LEACHATE CONVEYANCE	X		
P6	LEACHATE STORAGE SYSTEM P & ID	X		
P7	LEACHATE STORAGE SYSTEM P & ID	X		
		X		

NOTES:

1. DURING THE DEMOBILIZATION OF THE LEACHATE REMOVEL/DISPOSAL PHASE , ITEMS ON THIS DRAWING WERE REMOVED OR DEMOLISHED AND WERE PROPERLY DISPOSED AS DRY ACTIVE WASTE (DAW) ON SITE. SEE DRAWING AB-40 FOR THE DAW DISPOSAL LOCATIONS.
2. ITEMS ON THIS DRAWING WERE NOT CONSTRUCTED.
3. THE EMC BUNKER PHASE IIA WAS CONSTRUCTED. EMC BUNKER PHASE IIB WAS NOT CONSTRUCTED. SUBSEQUENTLY PHASE IIA WAS DEMOLISHED. FOR REVISED DRAWINGS SEE DESIGN DRAWINGS S12-S20.

STATE OF KENTUCKY
SAMUEL R. MAYES
22867
LICENSED
PROFESSIONAL ENGINEER

6-17-03

ENGINEER / SURVEYOR SEAL

NO	DATE	REVISION	ASBLT BY	DR BY	CHKD	ENGR	PROJ MGR	APPR
0	06/17/03	AS-BUILT	JGW	JWLS				

Shaw Shaw Environmental, Inc.

AS-BUILT BY: JGW
CHECKED BY:
DRAWN BY: JGW
DRAFTING CHECK BY:
ENGINEER/SURVEYOR APPROVAL:
PROJECT MANAGER:

CONFIDENTIAL PROPERTY OF
SHAW ENVIRONMENTAL, INC.

THIS DRAWING AND ALL INFORMATION THEREON IS CONFIDENTIAL AND MUST NOT BE MADE PUBLIC OR COPIED UNLESS DULY AUTHORIZED, SHALL NOT BE USED EXCEPT FOR THE PURPOSE FOR WHICH IT WAS SUPPLIED, AND IS SUBJECT TO RETURN ON DEMAND. ALL RIGHTS OF INVENTION OR DESIGN ARE RESERVED.

MAXEY FLATS DISPOSAL SITE
FLEMING COUNTY, KENTUCKY

AS-BUILT DRAWING INDEX,
DESIGN DRAWING INDEX AND
TOPO DRAWING KEY PLAN
(AS-BUILT)

STARTING DATE	JOB NO.	DRAWING NO.	REV
4/03/03	838409	AB-2	0

U:\Maxey Flats_2\As-Built Drawings\AP-AS3L1-02.dgn 06/16/03 jwalters 10:32:11 AM

CIVIL LEGEND

AS-BUILT

- BUILDING 1 THROUGH 16 (SEE BUILDING IDENTIFICATION TABLE THIS DRAWING)
- OFF SITE BUILDING
- ROADS
- CONCRETE PAD
- DRAINAGE WAY
- 1085 — CONTOURS
- 1051.8 — SPOT ELEVATIONS
- N 278000.54 / E 2194000.68 — COORDINATES
- SECURITY FENCE W/3 STRANDS OF BARBED WIRE
- SECURITY FENCE
- DOUBLE GATE
- MANWAY GATE
- CANTILEVER GATE
- TRAFFIC CONTROL GATE
- APPROXIMATE LOCATION OF PROPERTY LINE (SEE NOTE 2)
- OR — EMC CONCRETE BUNKER
- DEMOLISHED PHASE IIA EMC CONCRETE BUNKER
- 39 — WASTE TRENCHES
- CULVERT
- OR — CULVERT WITH HEADWALL
- BUFFER ZONE AREA
- GEOMEMBRANE LINER LIMITS
- MH — MANHOLE
- UTILITY POLE
- UTILITY POLE W/SECURITY LIGHT
- GUY WIRE AND ANCHOR
- LIMITS OF ARTICULATING BLOCK MAT (AB MAT)
- REINFORCED CONCRETE
- RIP-RAP
- GABION BASKET
- 1 — GEOMEMBRANE INTERIOR BERM OR ANCHOR TRENCH NUMBER
- ± — APPROXIMATE DIMENSION OR ELEVATION

BUILDING IDENTIFICATION TABLE

BUILDING NO.	BUILDING TITLE	BUILDING OUTCOME
1	COMMONWEALTH LABORATORY BUILDING	REMAIN
2	RADIATION CONTROL BUILDING WITH HOT LAB AND LAUNDRY	REMOVED
3	EPA TANK FARM BUILDING	DEMOLISHED
4	LABORATORY STORAGE BUILDING	DEMOLISHED
5	WAREHOUSE / STORAGE BUILDING	DEMOLISHED
6	EVAPORATOR BUILDING	DEMOLISHED
7	GARAGE BUILDING OR LSF BUILDING	DEMOLISHED
8	LARGE TANK FARM BUILDING	DEMOLISHED
9	SMALL TANK FARM BUILDING	DEMOLISHED
10	COMMONWEALTH GARAGE	REMAIN
11	CHANGE HOUSE & LAB TRAILER	REMOVED
12	SHAW ENVIRONMENTAL, INC. TRAILER	REMOVED
13	EPA TRAILER	REMOVED
14	COMMONWEALTH OFFICE BUILDING	REMAIN
15	COMMONWEALTH TANK BUILDING	REMAIN
16	COMMONWEALTH RESTRICTED AREA ACCESS BUILDING	REMAIN
17	EDB SHED	REMAIN

ABBREVIATIONS

ASPH	ASPHALT
ASTM	AMERICAN SOCIETY FOR TESTING AND MATERIALS
AWG	AMERICAN WIRE GAGE
℄	BASE LINE
B	BOTTOM
BF	BOTTOM FACE
BLDG	BUILDING
CFM	CUBIC FEET PER MINUTE
CL	CLEAR
℄	CENTERLINE
CMP	CORRUGATED METAL PIPE
CMU	CONCRETE MASONRY UNIT
CO	CLEANOUT
CONC	CONCRETE
CONT	CONTINUOUS LENGTH
CJ	CONSTRUCTION JOINT
CTJ	CONTRACTION JOINT
DIA	DIAMETER
D.I.	DUCTILE IRON
DWG	DRAWING
E	EAST
EF	EACH FACE
EL	ELEVATION
ELEC	ELECTRIC
EQUIP	EQUIPMENT
EQ SP	EQUALLY SPACED
EW	EACH WAY
EX	EXTRA
EXIST	EXISTING
EXP JT	EXPANSION JOINT
FIN	FINISH
FFE	FINISH FLOOR ELEVATION
FF	FRONT FACE
FT	FOOT; FEET
GALV	GALVANIZED
GCL	GEO-COMPOSITE CLAY LINER
GND	GROUND
GW	GROUNDWATER
HDPE	HIGH DENSITY POLYETHYLENE
HORIZ	HORIZONTAL
HWL	HIGH WATER LEVEL
ID	INSIDE DIAMETER, INSIDE DIMENSION
INV	INVERT
JT	JOINT
KV	KILOVOLT
KVA	KILOVOLT AMPERE
KW	KILOWATT
KWH	KILOWATT HOUR
MAX	MAXIMUM
MH	MANHOLE
MIN	MINIMUM
MISC	MISCELLANEOUS
N	NORTH
NIC	NOT IN CONTRACT
NO.	NUMBER
NTS	NOT TO SCALE
OC	ON CENTER
OD	OUTSIDE DIAMETER
OPT CJ	OPTIONAL CONSTRUCTION JOINT
OZ	OUNCE
PC	POINT OF CURVE
PI	POINT OF INTERSECTION
PLC'S	PLACES
ℙ	PLATE
PSI	POUNDS PER SQUARE INCH
PT	POINT
PVC	POLYVINYL CHLORIDE
R	RADIUS
RCP	REINFORCED CONCRETE PIPE
RD	ROAD
RED	REDUCING
REINF	REINFORCEMENT
REQD	REQUIRED
REV	REVISION
RGS	RIGID GALVANIZED STEEL
S	SOUTH
SCH	SCHEDULE
SDR	STANDARD DIMENSION RATIO FOR HDPE PIPE
SECT	SECTION
SL	SLOPE
SPEC	SPECIFICATION
STA	STATION
STL	STEEL
SY	SQUARE YARD
TF	TOP FACE
T	TOP
TW	TOP OF WALL
TYP	TYPICAL
UG	UNDERGROUND
VERT	VERTICAL
W	WEST
WWF	WELDED WIRE FABRIC
YR	YEAR
1Ø	SINGLE PHASE
2:1	SLOPE 2 HORIZONTAL TO 1 VERTICAL
±	APPROXIMATE DIMENSION OR ELEVATION

CIVIL GENERAL NOTES

1. ALL TRENCH LOCATIONS SHOWN ON DRAWINGS ARE APPROXIMATE.
2. ORIGINS FOR HORIZONTAL AND VERTICAL COORDINATES AND APPROXIMATE PROPERTY LINES ARE BASED ON DRAWINGS BY PALMER ENGINEERING OF WINCHESTER, KENTUCKY AND JAMES MAYO, KY PLS 2726. HORIZONTAL DATUM LISTED AS KENTUCKY STATE PLANE NORTH ZONE AND VERTICAL DATUM LISTED AS NAVD 1929. HORIZONTAL AND VERTICAL DATUM WERE NOT VERIFIED.

NO	DATE	REVISION	ASBLT BY	DR BY	CHKD	ENGR	PROJ MGR	APPR
0	08/17/03	AS-BUILT	JW	JW	GS			

Shaw Environmental, Inc.

AS-BUILT BY: JW Wilson
DRAWN BY: JW Wilson
CHECKED BY: GS
DRAFTING CHECK BY: Rich Hunt
ENGINEER/SURVEYOR APPROVAL: Samuel R. Mayes
PROJECT MANAGER: Michael Thomas

CONFIDENTIAL PROPERTY OF SHAW ENVIRONMENTAL, INC.

THIS DRAWING AND ALL INFORMATION THEREON IS CONFIDENTIAL AND MUST NOT BE MADE PUBLIC OR COPIED UNLESS DULY AUTHORIZED, SHALL NOT BE USED EXCEPT FOR THE PURPOSE FOR WHICH IT WAS SUPPLIED, AND IS SUBJECT TO RETURN ON DEMAND. ALL RIGHTS OF INVENTION OR DESIGN ARE RESERVED.

STATE OF KENTUCKY — SAMUEL R. MAYES 2937 — LICENSED PROFESSIONAL ENGINEER

6-17-03

ENGINEER / SURVEYOR SEAL

MAXEY FLATS DISPOSAL SITE
FLEMING COUNTY, KENTUCKY

GENERAL NOTES, LEGEND, ABBREVIATIONS AND BUILDING IDENTIFICATION TABLE (AS-BUILT)

STARTING DATE	JOB NO.	DRAWING NO.	REV
4/03/03	838409	AB-3	0

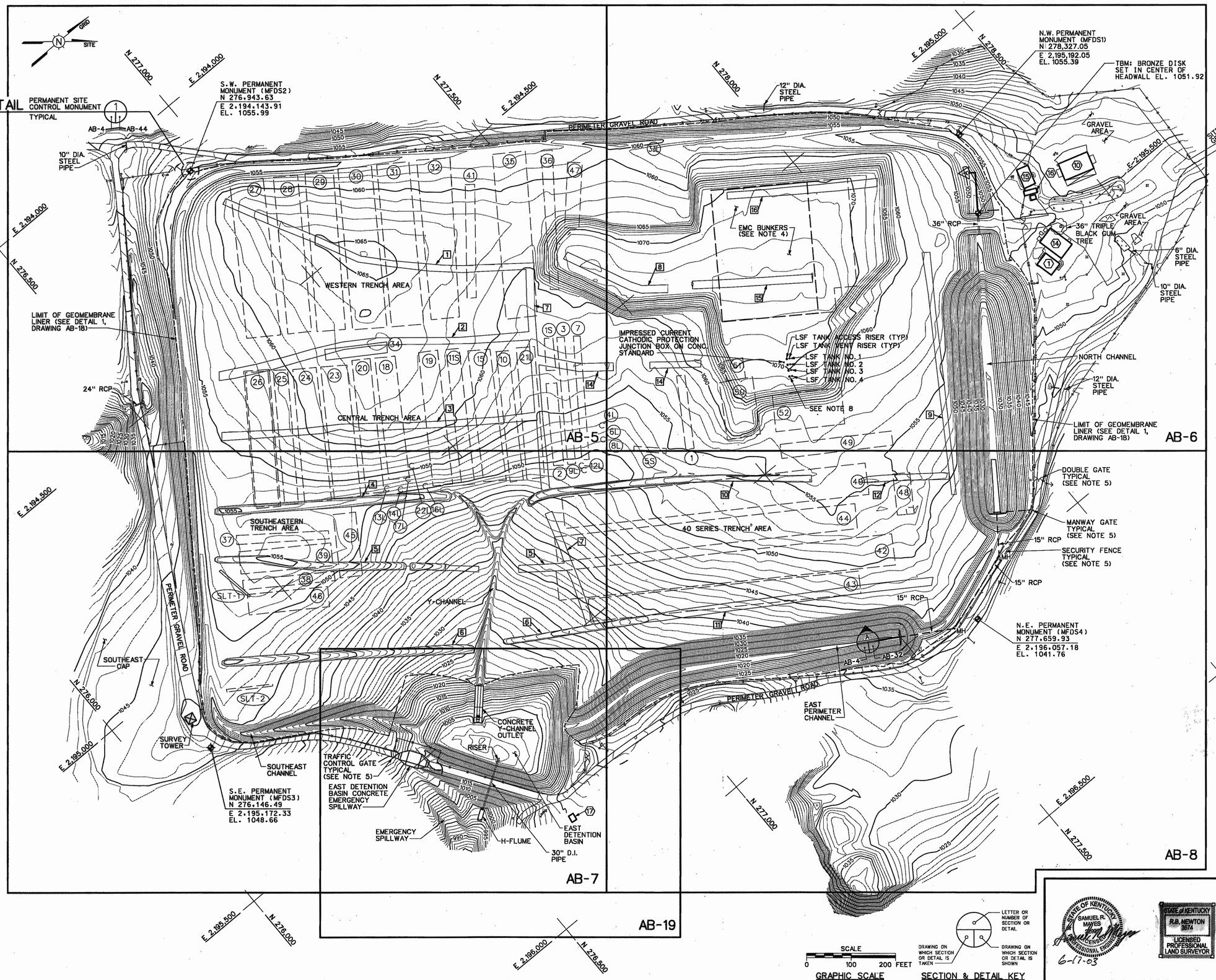

NOTES:

1. FOR DRAWING INDEX SEE DRAWING AB-2.
2. FOR GENERAL NOTES, LEGEND AND ABBREVIATIONS SEE DRAWING AB-3.
3. FOR 1"=50' SCALE GRADING PLANS SEE DRAWINGS AB-5 - AB-8.
4. FOR EMC BUNKER AS-BUILT SEE DRAWINGS AB-26 - AB-31.
5. FOR SECURITY FENCE, GATES, AND GROUNDING DETAILS SEE DRAWING AB-44.
6. FOR TYPICAL ROAD SECTION SEE DRAWING AB-44.
7. FOR PERMANENT SITE CONTROL MONUMENT DETAIL SEE DRAWING AB-44.
8. FOR LSF TANKS 1-4 AS-BUILT SEE DRAWING AB-41.

SURVEYOR'S CERTIFICATION

I certify that this drawing depicts a topographical survey conducted by me or under my direction. See Civil General Note #2 at Sheet AB-3 for horizontal and vertical origins.

Richey B. Newton — KY PLS 3674 — Date 6/17/03

NO	DATE	REVISION	ASBLT BY	DR BY	CHKD	ENGR	PROJ MGR	APPR
0	06/17/03	AS-BUILT	JW	JW	LS			

Shaw Shaw Environmental, Inc.

AS-BUILT BY: JW Waters
DRAWN BY: JW Waters
CHECKED BY:
DRAFTING CHECK BY:
ENGINEER/SURVEYOR APPROVAL: Samuel R. Mayes
PROJECT MANAGER:

CONFIDENTIAL PROPERTY OF SHAW ENVIRONMENTAL, INC.

THIS DRAWING AND ALL INFORMATION THEREON IS CONFIDENTIAL AND MUST NOT BE MADE PUBLIC OR COPIED UNLESS DULY AUTHORIZED, SHALL NOT BE USED EXCEPT FOR THE PURPOSE FOR WHICH IT WAS SUPPLIED, AND IS SUBJECT TO RETURN ON DEMAND. ALL RIGHTS OF INVENTION OR DESIGN ARE RESERVED.

STATE OF KENTUCKY SAMUEL R. MAYES LICENSED PROFESSIONAL ENGINEER 6-17-03

STATE OF KENTUCKY R.B. NEWTON 3674 LICENSED PROFESSIONAL LAND SURVEYOR

ENGINEER / SURVEYOR SEAL

MAXEY FLATS DISPOSAL SITE
FLEMING COUNTY, KENTUCKY

OVERALL SITE TOPO (AS-BUILT)

STARTING DATE	JOB NO.	DRAWING NO.	REV
4/17/03	838409	AB-4	0

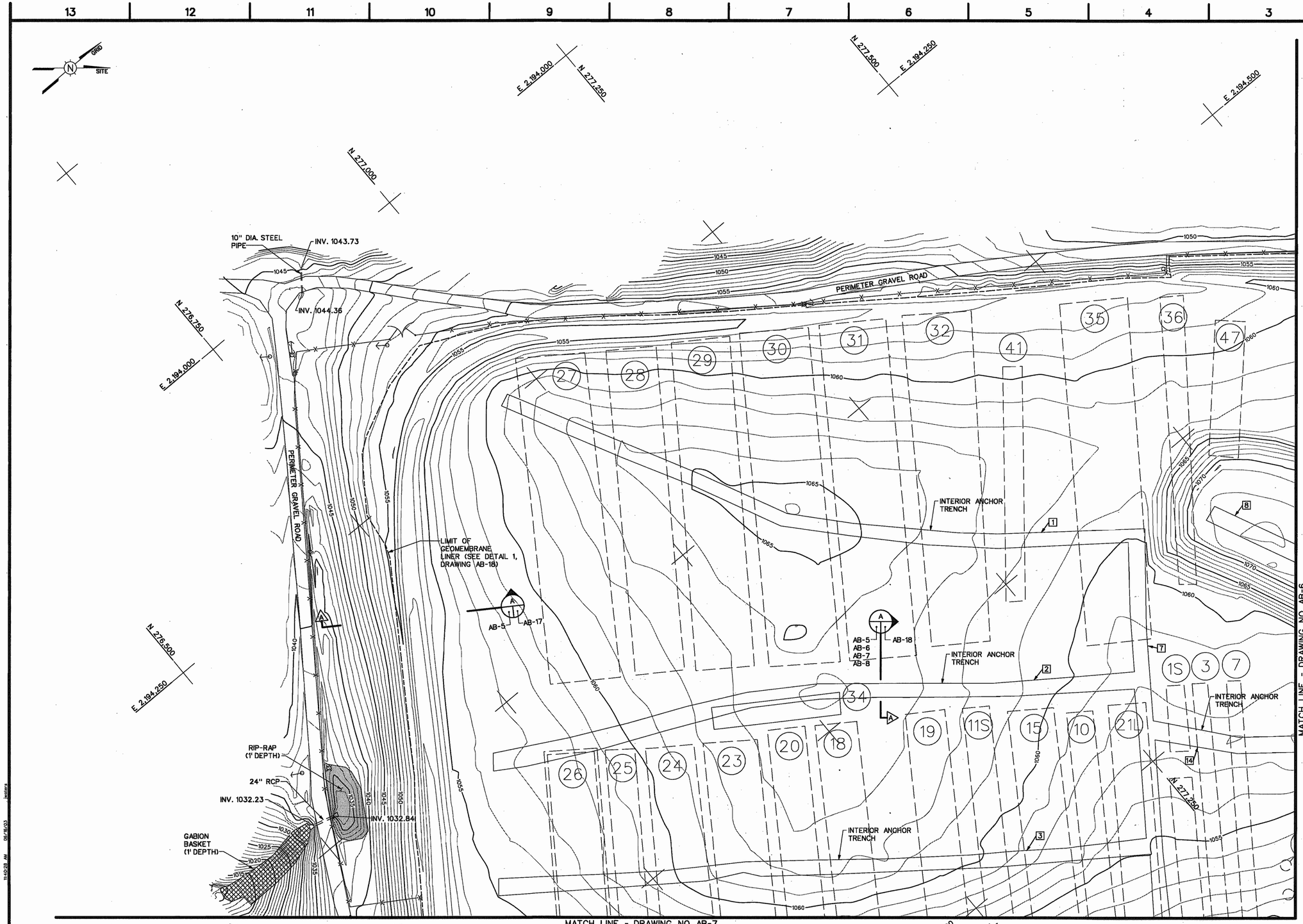

NOTES:

1. FOR DRAWING INDEX SEE DRAWING AB-2.
2. FOR GENERAL NOTES, LEGEND AND ABBREVIATIONS SEE DRAWING AB-3.

SURVEYOR'S CERTIFICATION

I certify that this drawing depicts a topographical survey conducted by me or under my direction. See Civil General Note #2 on Sheet AB-3 for horizontal and vertical origins.

Richey B. Newton — 3674 KY PLS — 6/17/03 Date

NO	DATE	REVISION	ASBLT BY	DR BY	CHKD	ENGR	PROJ MGR	APPR
0	06/17/03	AS-BUILT	JW	JW	LS			

Shaw® Shaw Environmental, Inc.

AS-BUILT BY: — DRAWN BY:
CHECKED BY: — DRAFTING CHECK BY:
ENGINEER/SURVEYOR APPROVAL: — PROJECT MANAGER:

CONFIDENTIAL PROPERTY OF SHAW ENVIRONMENTAL, INC.

THIS DRAWING AND ALL INFORMATION THEREON IS CONFIDENTIAL AND MUST NOT BE MADE PUBLIC OR COPIED UNLESS DULY AUTHORIZED, SHALL NOT BE USED EXCEPT FOR THE PURPOSE FOR WHICH IT WAS SUPPLIED, AND IS SUBJECT TO RETURN ON DEMAND. ALL RIGHTS OF INVENTION OR DESIGN ARE RESERVED.

SCALE 0 50 100 FEET
GRAPHIC SCALE

LETTER OR NUMBER OF SECTION OR DETAIL
DRAWING ON WHICH SECTION OR DETAIL IS TAKEN
DRAWING ON WHICH SECTION OR DETAIL IS SHOWN
SECTION & DETAIL KEY

STATE OF KENTUCKY SAMUEL LYNN JONES 22937 LICENSED PROFESSIONAL ENGINEER
6-17-03
ENGINEER / SURVEYOR SEAL

STATE of KENTUCKY R.B. NEWTON 3674 LICENSED PROFESSIONAL LAND SURVEYOR

MAXEY FLATS DISPOSAL SITE
FLEMING COUNTY, KENTUCKY

SITE TOPO
SHEET 1 OF 4
(AS-BUILT)

STARTING DATE	JOB NO.	DRAWING NO.	REV
4/17/03	838409	AB-5	0

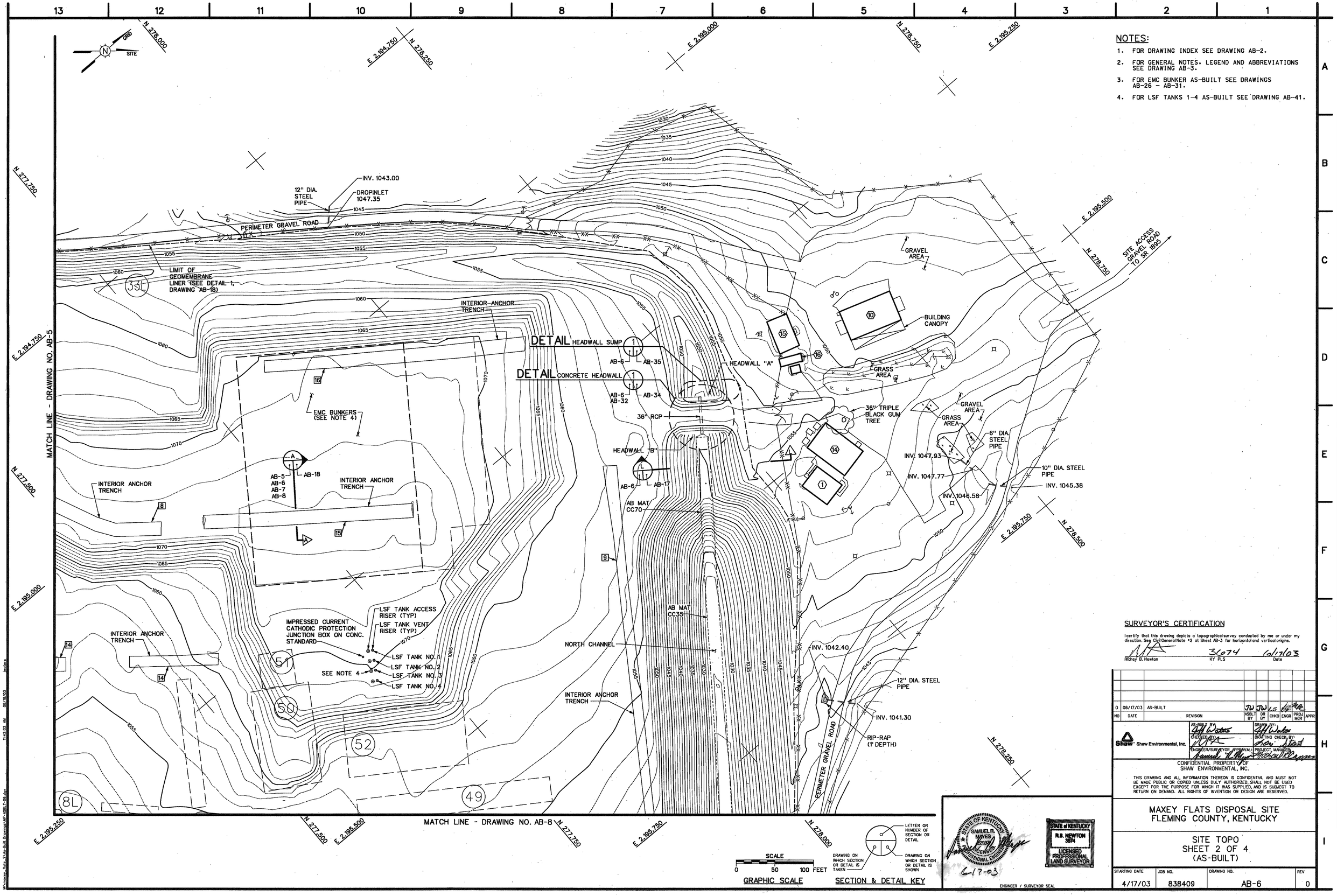

NOTES:

1. FOR DRAWING INDEX SEE DRAWING AB-2.
2. FOR GENERAL NOTES, LEGEND AND ABBREVIATIONS SEE DRAWING AB-3.
3. FOR EMC BUNKER AS-BUILT SEE DRAWINGS AB-26 – AB-31.
4. FOR LSF TANKS 1-4 AS-BUILT SEE DRAWING AB-41.

SURVEYOR'S CERTIFICATION

I certify that this drawing depicts a topographical survey conducted by me or under my direction. See Civil General Note #2 at Sheet AB-3 for horizontal and vertical origins.

Richey B. Newton — 3674 KY PLS — 6/17/03 Date

NO	DATE	REVISION	ASBLT BY	DR BY	CHKD	ENGR	PROJ MGR	APPR
0	06/17/03	AS-BUILT	JW	JW	LS			

Shaw Shaw Environmental, Inc.

AS-BUILT BY: Jeff Walters
DRAWN BY: Jeff Walters
CHECKED BY:
DRAFTING CHECK BY:
ENGINEER/SURVEYOR APPROVAL:
PROJECT MANAGER:

CONFIDENTIAL PROPERTY OF SHAW ENVIRONMENTAL, INC.

THIS DRAWING AND ALL INFORMATION THEREON IS CONFIDENTIAL AND MUST NOT BE MADE PUBLIC OR COPIED UNLESS DULY AUTHORIZED, SHALL NOT BE USED EXCEPT FOR THE PURPOSE FOR WHICH IT WAS SUPPLIED, AND IS SUBJECT TO RETURN ON DEMAND. ALL RIGHTS OF INVENTION OR DESIGN ARE RESERVED.

MAXEY FLATS DISPOSAL SITE
FLEMING COUNTY, KENTUCKY

SITE TOPO
SHEET 2 OF 4
(AS-BUILT)

STARTING DATE	JOB NO.	DRAWING NO.	REV
4/17/03	838409	AB-6	0

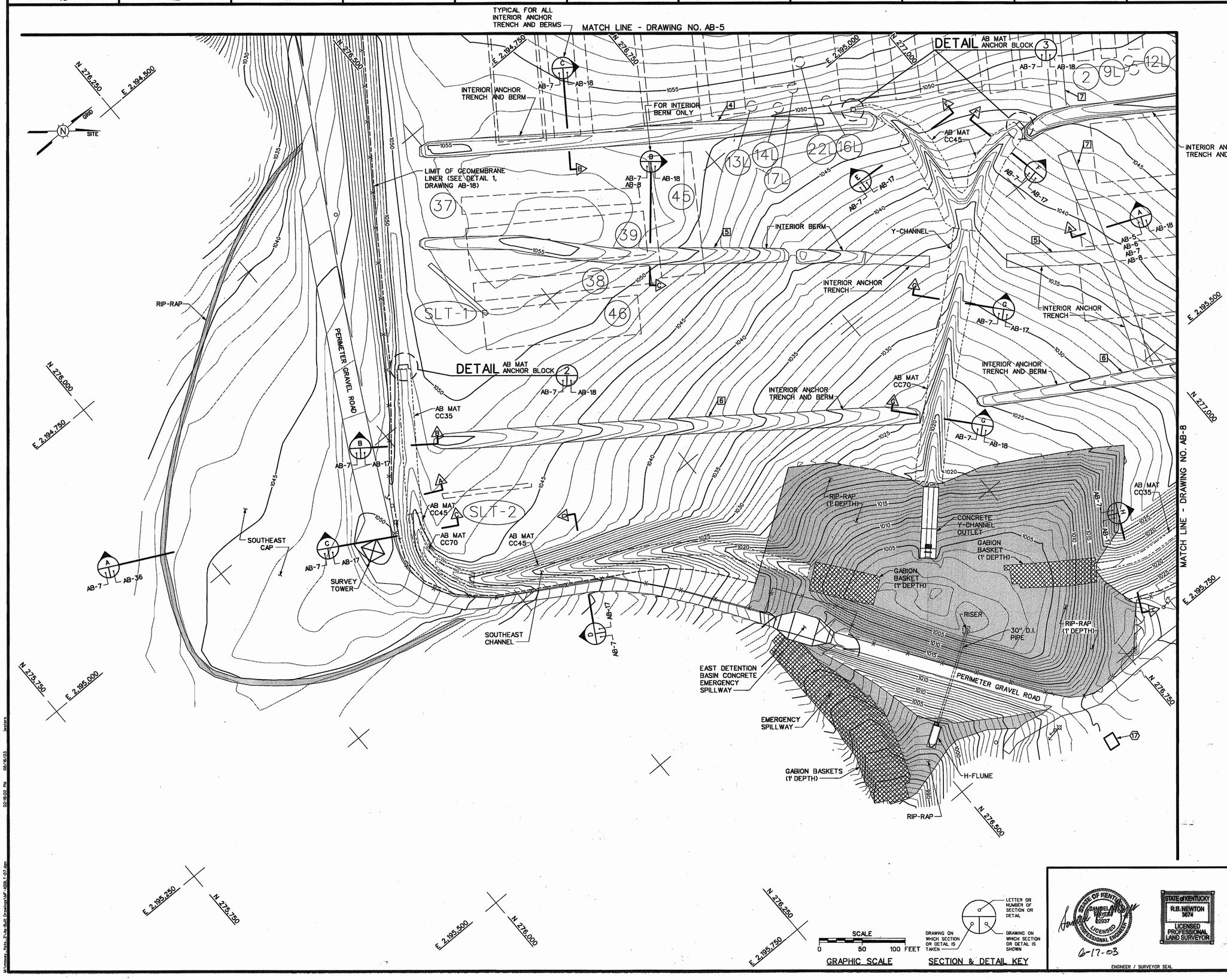

NOTES:

1. FOR DRAWING INDEX SEE DRAWING AB-2.
2. FOR GENERAL NOTES, LEGEND AND ABBREVIATIONS SEE DRAWING AB-3.

SURVEYOR'S CERTIFICATION

I certify that this drawing depicts a topographical survey conducted by me or under my direction. See Civil General Note #2 at Sheet AB-3 for horizontal and vertical origins.

Rickey B. Newton — 3674 KY PLS — 6/17/03 Date

NO	DATE	REVISION	ASBLT BY	DR BY	CHKD	ENGR	PROJ MGR	APPR
0	06/17/03	AS-BUILT	JW	JW	CS			

AS-BUILT BY: JW Newton — DRAWN BY: JW Newton
CHECKED BY: — DRAFTING CHECK BY: Steve Hurst
ENGINEER/SURVEYOR APPROVAL: — PROJECT MANAGER: Randall R. Mapes

Shaw Environmental, Inc.

CONFIDENTIAL PROPERTY OF SHAW ENVIRONMENTAL, INC.

THIS DRAWING AND ALL INFORMATION THEREON IS CONFIDENTIAL AND MUST NOT BE MADE PUBLIC OR COPIED UNLESS DULY AUTHORIZED, SHALL NOT BE USED EXCEPT FOR THE PURPOSE FOR WHICH IT WAS SUPPLIED, AND IS SUBJECT TO RETURN ON DEMAND. ALL RIGHTS OF INVENTION OR DESIGN ARE RESERVED.

MAXEY FLATS DISPOSAL SITE
FLEMING COUNTY, KENTUCKY

SITE TOPO
SHEET 3 OF 4
(AS-BUILT)

STARTING DATE	JOB NO.	DRAWING NO.	REV
4/17/03	838409	AB-7	0

SCALE 0 50 100 FEET — GRAPHIC SCALE

LETTER OR NUMBER OF SECTION OR DETAIL — DRAWING ON WHICH SECTION OR DETAIL IS TAKEN — DRAWING ON WHICH SECTION OR DETAIL IS SHOWN — SECTION & DETAIL KEY

STATE OF KENTUCKY RANDALL R. MAPES 12937 LICENSED PROFESSIONAL ENGINEER — 6-17-03

STATE OF KENTUCKY R.B. NEWTON 3674 LICENSED PROFESSIONAL LAND SURVEYOR

ENGINEER / SURVEYOR SEAL

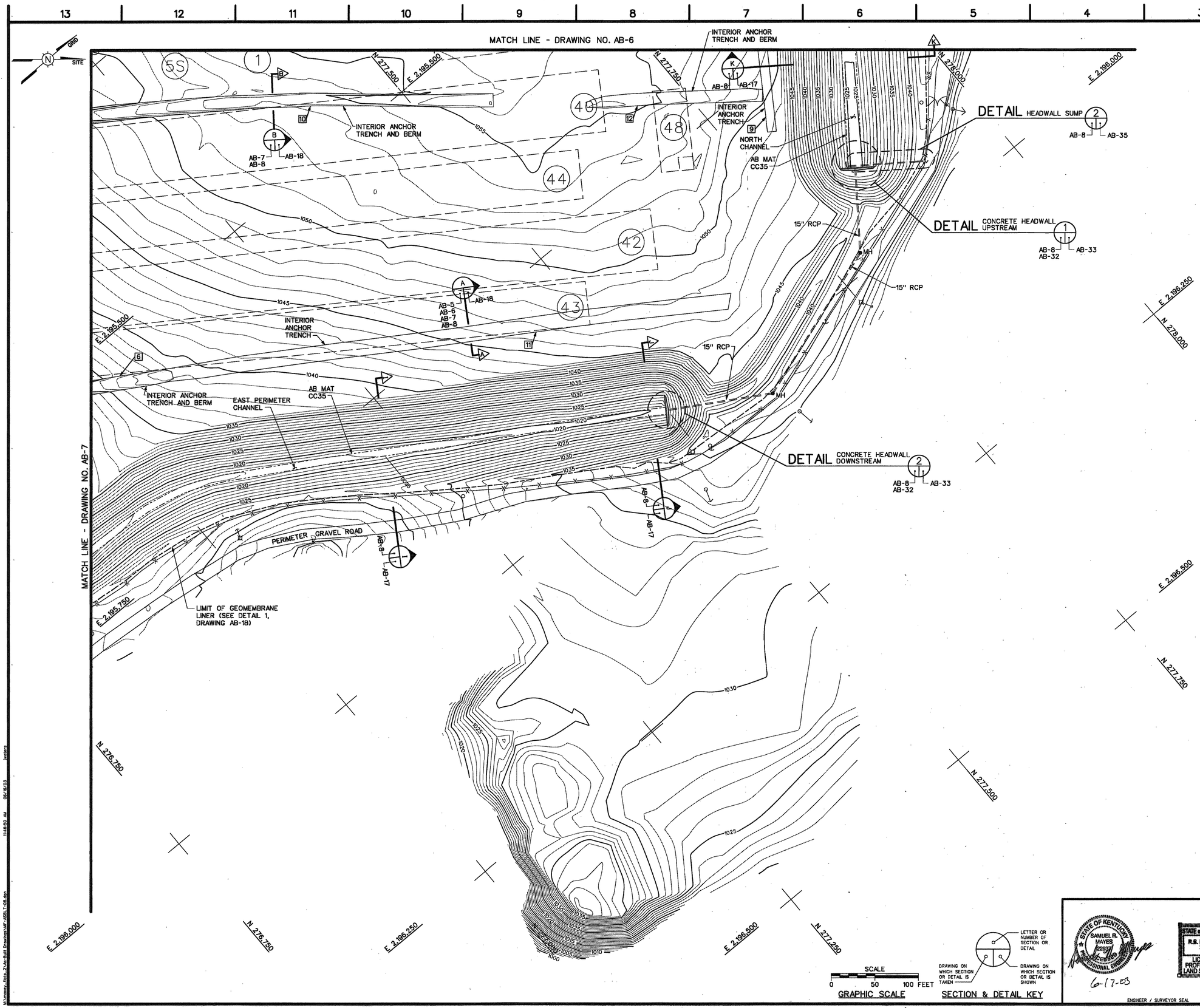

NOTES:

1. FOR DRAWING INDEX SEE DRAWING AB-2.
2. FOR GENERAL NOTES, LEGEND AND ABBREVIATIONS SEE DRAWING AB-3.

SURVEYOR'S CERTIFICATION

I certify that this drawing depicts a topographical survey conducted by me or under my direction. See Civil General Note #2 at Sheet AB-3 for horizontal and vertical origins.

Pitney B. Newton — 3674 KY PLS — 6/17/03 Date

NO	DATE	REVISION	ASBLT BY	DR BY	CHKD	ENGR	PROJ MGR	APPR
0	06/17/03	AS-BUILT	JW	JW	CS			

Shaw Environmental, Inc.

AS-BUILT BY: PB Newton — DRAWN BY: PB Newton
CHECKED BY: — DRAFTING CHECK BY: Don Stout
ENGINEER/SURVEYOR APPROVAL: Samuel R. Mayes — PROJECT MANAGER: Richard Rapp

CONFIDENTIAL PROPERTY OF SHAW ENVIRONMENTAL, INC.

THIS DRAWING AND ALL INFORMATION THEREON IS CONFIDENTIAL AND MUST NOT BE MADE PUBLIC OR COPIED UNLESS DULY AUTHORIZED, SHALL NOT BE USED EXCEPT FOR THE PURPOSE FOR WHICH IT WAS SUPPLIED, AND IS SUBJECT TO RETURN ON DEMAND. ALL RIGHTS OF INVENTION OR DESIGN ARE RESERVED.

MAXEY FLATS DISPOSAL SITE
FLEMING COUNTY, KENTUCKY

SITE TOPO
SHEET 4 OF 4
(AS-BUILT)

STARTING DATE	JOB NO.	DRAWING NO.	REV
4/17/03	838409	AB-8	0

SCALE 0 50 100 FEET
GRAPHIC SCALE

LETTER OR NUMBER OF SECTION OR DETAIL
DRAWING ON WHICH SECTION OR DETAIL IS TAKEN
DRAWING ON WHICH SECTION OR DETAIL IS SHOWN
SECTION & DETAIL KEY

STATE OF KENTUCKY — SAMUEL R. MAYES — LICENSED PROFESSIONAL ENGINEER — 6-17-03
ENGINEER / SURVEYOR SEAL

STATE of KENTUCKY — P.B. NEWTON 3674 — LICENSED PROFESSIONAL LAND SURVEYOR

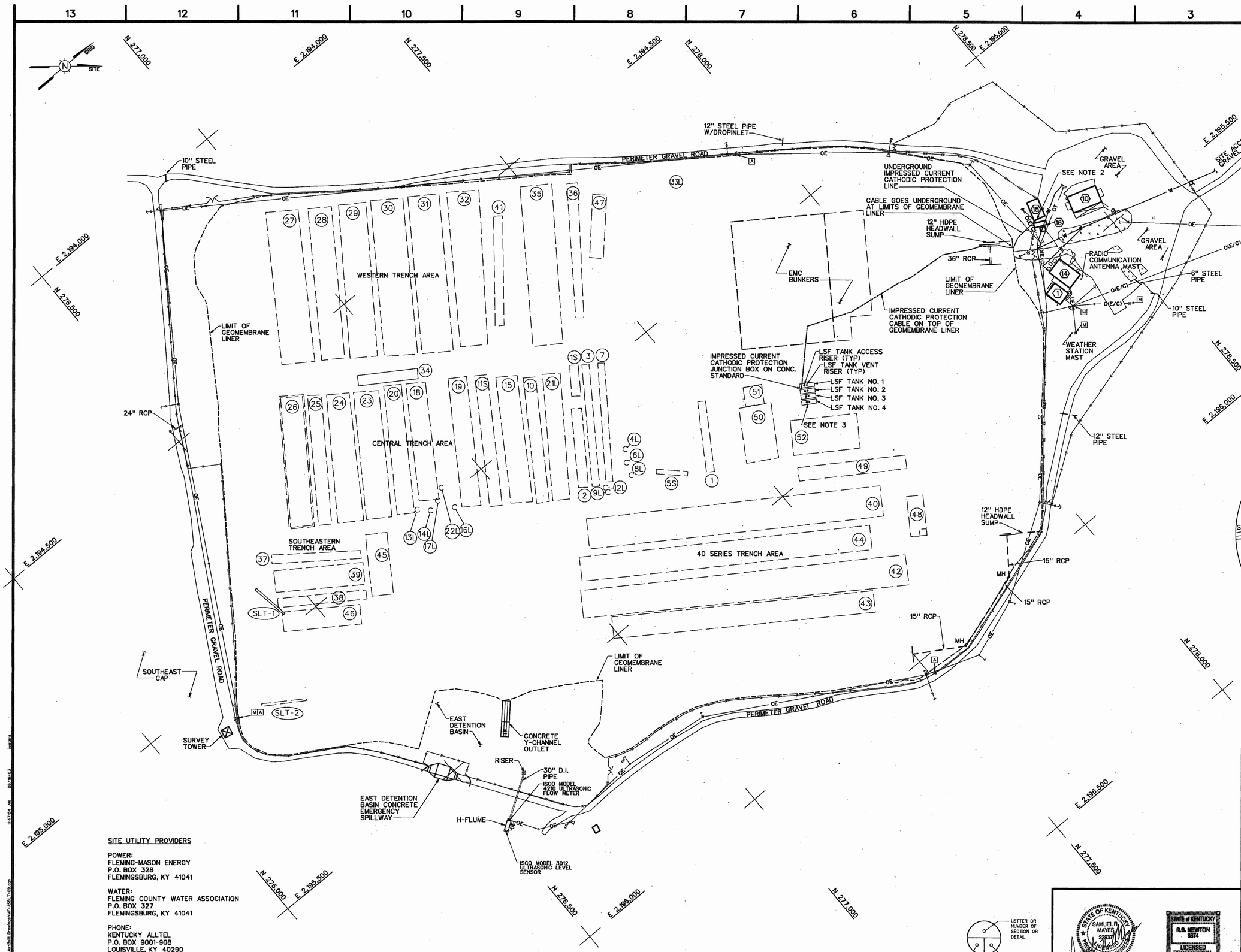

NOTES:

1. ALL UNDERGROUND WATER & ELECTRICAL ETC. SHOWN ON THIS DRAWING IS APPROXIMATE IN LOCATION AND BASED ON BEST AVAILABLE INFORMATION.
2. IMPRESSED CURRENT CATHODIC PROTECTION CABLE IS ROUTED TO RECTIFIER LOCATED INSIDE BUILDING 15.
3. FOR LSF TANKS 1-4 AS-BUILT SEE DRAWING AB-41.

UTILITY LEGEND

AS-BUILT

- UTILITY POLE
- UTILITY POLE W/SECURITY LIGHT
- UTILITY POLE W/TRANSFORMER
- GUY WIRE AND ANCHOR
- OE — OVERHEAD ELECTRICAL LINE
- O(E/C) — OVERHEAD ELECTRICAL AND COMMUNICATION LINE
- UE — UNDERGROUND ELECTRICAL LINE
- UC — UNDERGROUND COMMUNICATION LINE
- A — AIR MONITOR
- M — ELECTRIC METER
- CULVERT
- CULVERT WITH HEADWALL
- MH — MANHOLE
- FIRE HYDRANT
- CAP
- W — POTABLE WATER LINE

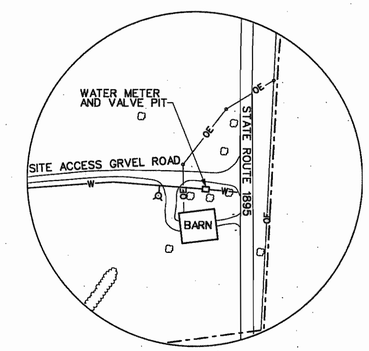

DETAIL

LOCATION AT INTERSECTION OF SITE ACCESS ROAD AND STATE ROUTE 1895

SCALE: 1"=100'-0"

1 / 1 — AB-9 — AB-9

SITE UTILITY PROVIDERS

POWER:
FLEMING-MASON ENERGY
P.O. BOX 328
FLEMINGSBURG, KY 41041

WATER:
FLEMING COUNTY WATER ASSOCIATION
P.O. BOX 327
FLEMINGSBURG, KY 41041

PHONE:
KENTUCKY ALLTEL
P.O. BOX 9001-908
LOUISVILLE, KY 40290

SCALE: 0 100 200 FEET — GRAPHIC SCALE

SECTION & DETAIL KEY: LETTER OR NUMBER OF SECTION OR DETAIL; DRAWING ON WHICH SECTION OR DETAIL IS TAKEN; DRAWING ON WHICH SECTION OR DETAIL IS SHOWN

SURVEYOR'S CERTIFICATION

I certify that this drawing depicts a topographical survey conducted by me or under my direction. See Civil General Note #2 of Sheet AB-3 for horizontal and vertical origins.

Richey B. Newton — 3674 KY PLS — 6/17/03 Date

STATE OF KENTUCKY — SAMUEL R. MAYES 22937 — LICENSED PROFESSIONAL ENGINEER — 6-17-03

STATE of KENTUCKY — R.B. NEWTON 3674 — LICENSED PROFESSIONAL LAND SURVEYOR

ENGINEER / SURVEYOR SEAL

NO	DATE	REVISION	ASBLT BY	DR BY	CHKD	ENGR	PROJ MGR	APPR
0	06/17/03	AS-BUILT	JW	JW	LS			

Shaw Environmental, Inc.

AS-BUILT BY: JW Watson — DRAWN BY: JW Watson
CHECKED BY: — DRAFTING CHECK BY: Brian Short
ENGINEER/SURVEYOR: RICHARD W. NEWTON — PROJECT MANAGER: Samuel R. Mayes / Richard Brown

CONFIDENTIAL PROPERTY OF SHAW ENVIRONMENTAL, INC.

THIS DRAWING AND ALL INFORMATION THEREON IS CONFIDENTIAL AND MUST NOT BE MADE PUBLIC OR COPIED UNLESS DULY AUTHORIZED, SHALL NOT BE USED EXCEPT FOR THE PURPOSE FOR WHICH IT WAS SUPPLIED, AND IS SUBJECT TO RETURN ON DEMAND. ALL RIGHTS OF INVENTION OR DESIGN ARE RESERVED.

MAXEY FLATS DISPOSAL SITE
FLEMING COUNTY, KENTUCKY

UTILITIES (AS-BUILT)

STARTING DATE	JOB NO.	DRAWING NO.	REV
4/08/03	838409	AB-9	0

NOTES:

1. FOR DRAWING INDEX SEE DRAWING AB-2.
2. FOR GENERAL NOTES, LEGEND AND ABBREVIATIONS SEE DRAWING AB-3.
3. FOR SUMP INFORMATION SEE DRAWING AB-13.
4. FOR NRC SUMP INFROMATION SEE DRAWING AB-13.

LEGEND:

- ABANDONED MONITORING WELL LOCATION
- ABANDONED SUMP LOCATION
- DORMANT SUMP LOCATION
- NRC ABANDONED SUMP LOCATION

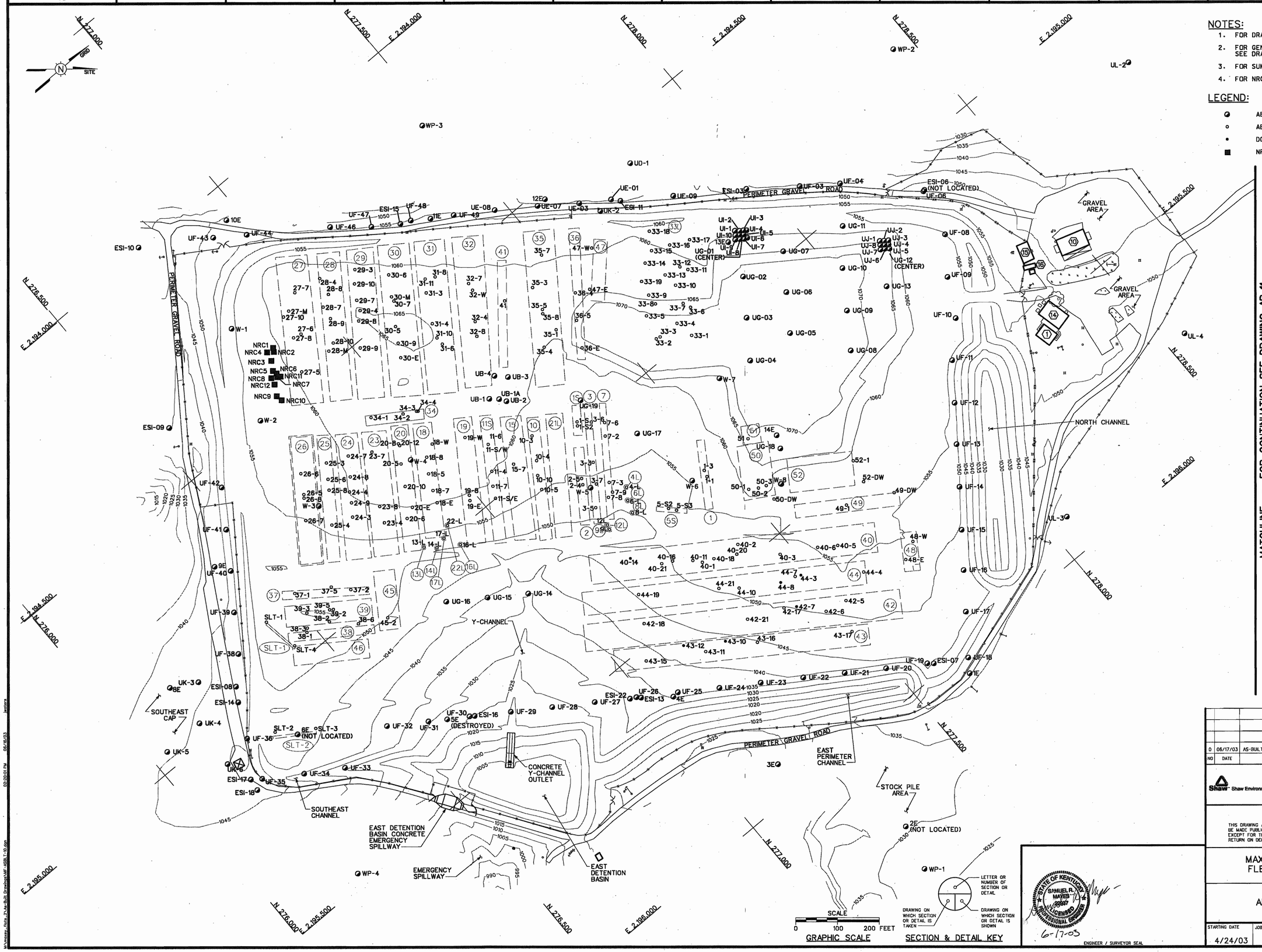

SCALE
0 100 200 FEET
GRAPHIC SCALE

LETTER OR NUMBER OF SECTION OR DETAIL
DRAWING ON WHICH SECTION OR DETAIL IS TAKEN
DRAWING ON WHICH SECTION OR DETAIL IS SHOWN
SECTION & DETAIL KEY

STATE OF KENTUCKY
SAMUEL R. MAYES
25267
LICENSED PROFESSIONAL ENGINEER
6-17-03
ENGINEER / SURVEYOR SEAL

NO	DATE	REVISION	ASBLT BY	DR BY	CHKD	ENGR	PROJ MGR	APPR
0	06/17/03	AS-BUILT	LS	LS				

Shaw Environmental, Inc.

AS-BUILT BY: Lisa Stout
DRAWN BY: Lisa Stout
CHECKED BY:
DRAFTING CHECK BY:
ENGINEER/SURVEYOR APPROVAL: Samuel R. Mayes
PROJECT MANAGER: Michael Lynn

CONFIDENTIAL PROPERTY OF SHAW ENVIRONMENTAL, INC.

THIS DRAWING AND ALL INFORMATION THEREON IS CONFIDENTIAL AND MUST NOT BE MADE PUBLIC OR COPIED UNLESS DULY AUTHORIZED, SHALL NOT BE USED EXCEPT FOR THE PURPOSE FOR WHICH IT WAS SUPPLIED, AND IS SUBJECT TO RETURN ON DEMAND. ALL RIGHTS OF INVENTION OR DESIGN ARE RESERVED.

MAXEY FLATS DISPOSAL SITE
FLEMING COUNTY, KENTUCKY

SUMP AND WELL ABANDONMENT LOCATIONS (AS-BUILT)

STARTING DATE	JOB NO.	DRAWING NO.	REV
4/24/03	838409	AB-10	0

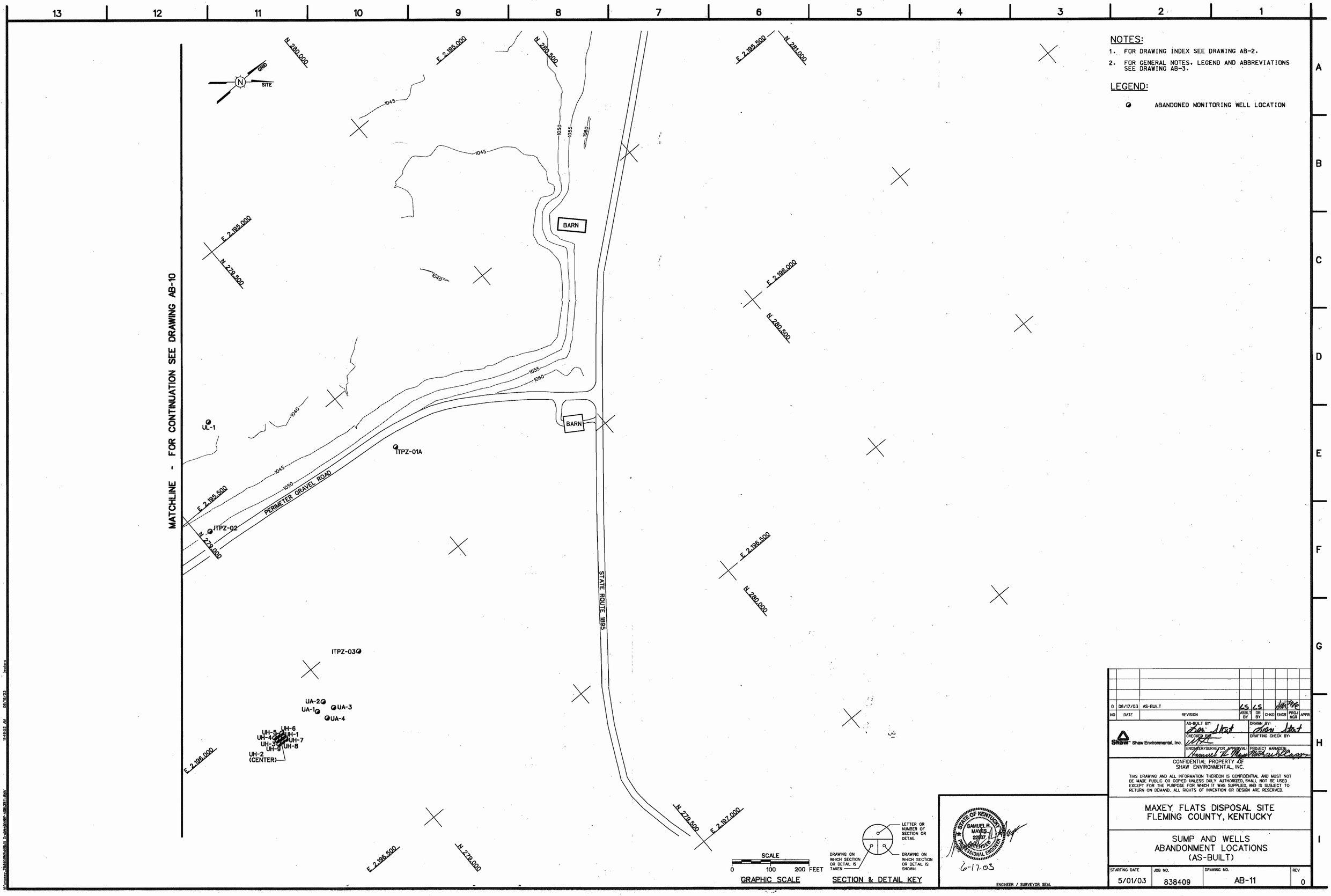

NOTES:

1. FOR DRAWING INDEX SEE DRAWING AB-2.
2. FOR GENERAL NOTES, LEGEND AND ABBREVIATIONS SEE DRAWING AB-3.

LEGEND:

ABANDONED MONITORING WELL LOCATION

SCALE

0 100 200 FEET

GRAPHIC SCALE

LETTER OR NUMBER OF SECTION OR DETAIL

DRAWING ON WHICH SECTION OR DETAIL IS TAKEN

DRAWING ON WHICH SECTION OR DETAIL IS SHOWN

SECTION & DETAIL KEY

STATE OF KENTUCKY
SAMUEL R. MAYES
22887
LICENSED
PROFESSIONAL ENGINEER

6-17-03

ENGINEER / SURVEYOR SEAL

NO	DATE	REVISION	ASBLT BY	DR BY	CHKD	ENGR	PROJ MGR	APPR
0	06/17/03	AS-BUILT	LS	LS				

Shaw Environmental, Inc.

AS-BUILT BY: Lori Stout
DRAWN BY: Lori Stout
CHECKED BY:
DRAFTING CHECK BY:
ENGINEER/SURVEYOR APPROVAL:
PROJECT MANAGER:

CONFIDENTIAL PROPERTY OF
SHAW ENVIRONMENTAL, INC.

THIS DRAWING AND ALL INFORMATION THEREON IS CONFIDENTIAL AND MUST NOT BE MADE PUBLIC OR COPIED UNLESS DULY AUTHORIZED, SHALL NOT BE USED EXCEPT FOR THE PURPOSE FOR WHICH IT WAS SUPPLIED, AND IS SUBJECT TO RETURN ON DEMAND. ALL RIGHTS OF INVENTION OR DESIGN ARE RESERVED.

MAXEY FLATS DISPOSAL SITE
FLEMING COUNTY, KENTUCKY

SUMP AND WELLS ABANDONMENT LOCATIONS (AS-BUILT)

STARTING DATE	JOB NO.	DRAWING NO.	REV
5/01/03	838409	AB-11	0

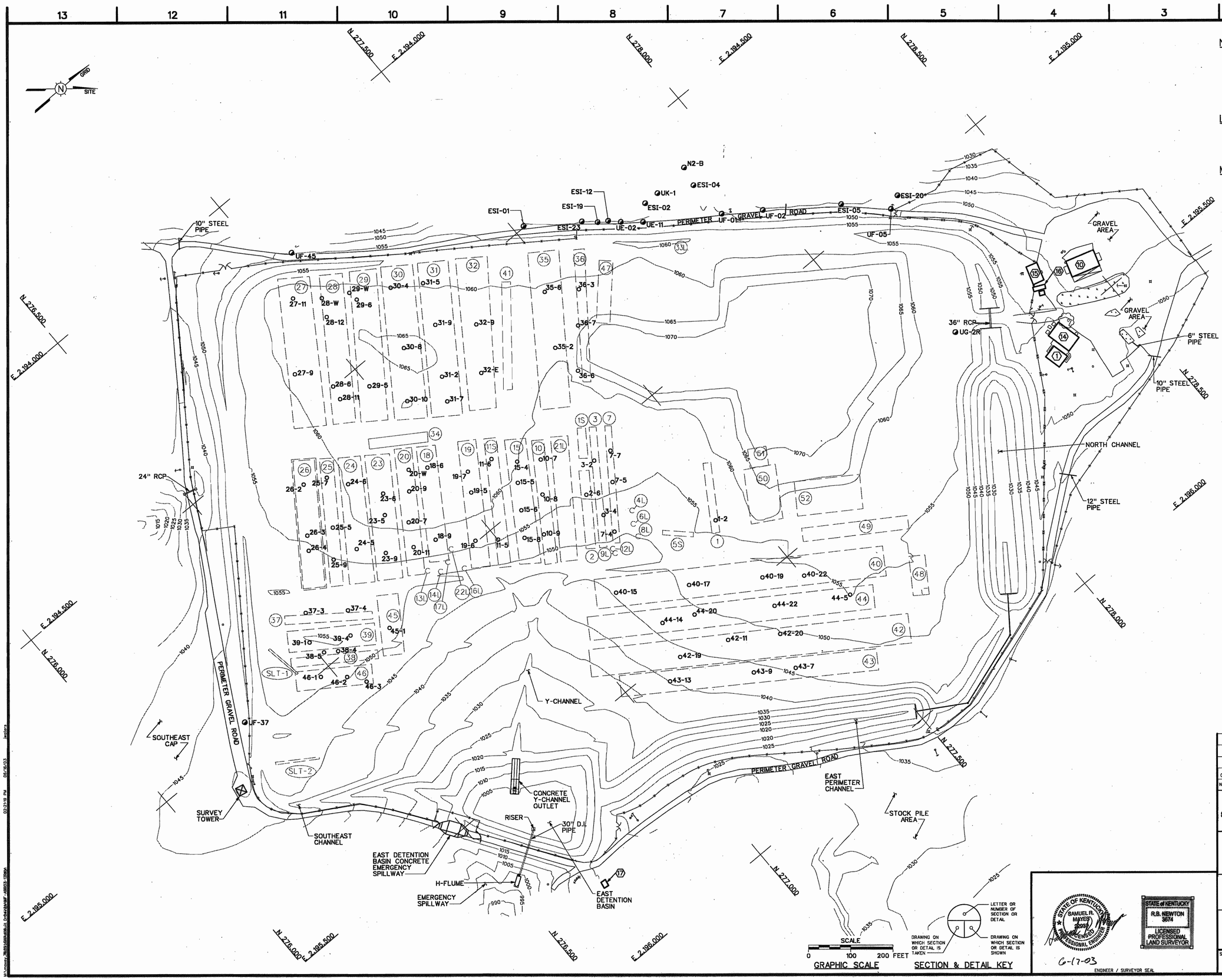

NOTES:

1. FOR DRAWING INDEX SEE DRAWING AB-2.
2. FOR GENERAL NOTES, LEGEND AND ABBREVIATIONS SEE DRAWING AB-3.
3. FOR SUMP INFORMATION SEE DRAWING AB-13.
4. FOR MONITORING WELL INFORMATION SEE TABLE BELOW.

LEGEND:

- EXISTING MONITORING WELL EXTENSION LOCATION
- EXISTING SUMP EXTENSION LOCATION

MONITORING WELL INFORMATION:

WELL NO.	NORTHING	EASTING	GROUND EL.
UF-45	277062.20	2194192.24	1054.2
ESI-01	277523.81	2194497.48	1050.7
ESI-23	277637.05	2194577.50	1050.0
ESI-19	277664.66	2194602.95	1050.0
ESI-12	277685.94	2194616.32	1049.6
UE-02	277707.12	2194637.73	1050.2
UE-11	277747.45	2194671.74	1051.3
ESI-02	277779.99	2194640.66	1047.5
UK-1	277817.85	2194641.25	1046.1
N2-B	277905.34	2194634.71	1044.5
ESI-04	277895.52	2194681.47	1048.0
UF-01	277903.29	2194776.61	1050.1
UF-02	277984.03	2194832.70	1046.0
ESI-05	278135.05	2194941.14	1045.1
UF-05	278218.11	2195025.49	1048.9
ESI-20	278250.62	2195010.72	1045.2
UG-2R	278148.00	2195346.63	1060.0
UF-37	276262.61	2194975.40	1048.2

SURVEYOR'S CERTIFICATION

I certify that this drawing depicts a topographical survey conducted by me or under my direction. See Civil General Note #2 at Sheet AB-3 for horizontal and vertical origins.

Richey B. Newton — KY PLS 3674 — Date 6/17/03

NO	DATE	REVISION	ASBL'T BY	DR BY	CHKD	ENGR	PROJ MGR	APPR
0	06/17/03	AS-BUILT	LS	LS				

Shaw Environmental, Inc.

AS-BUILT BY: Lori Stout
DRAWN BY: Lori Stout
CHECKED BY: RBN
DRAFTING CHECK BY: RBN
ENGINEER/SURVEYOR APPROVAL: Samuel R. Mayes
PROJECT MANAGER: Charles Rosson

CONFIDENTIAL PROPERTY OF SHAW ENVIRONMENTAL, INC.

THIS DRAWING AND ALL INFORMATION THEREON IS CONFIDENTIAL AND MUST NOT BE MADE PUBLIC OR COPIED UNLESS DULY AUTHORIZED, SHALL NOT BE USED EXCEPT FOR THE PURPOSE FOR WHICH IT WAS SUPPLIED, AND IS SUBJECT TO RETURN ON DEMAND. ALL RIGHTS OF INVENTION OR DESIGN ARE RESERVED.

STATE OF KENTUCKY — SAMUEL R. MAYES — LICENSED PROFESSIONAL ENGINEER

6-17-03

ENGINEER / SURVEYOR SEAL

STATE of KENTUCKY — R.B. NEWTON 3674 — LICENSED PROFESSIONAL LAND SURVEYOR

MAXEY FLATS DISPOSAL SITE
FLEMING COUNTY, KENTUCKY

EXISTING SUMP AND WELL EXTENSION LOCATIONS (AS-BUILT)

STARTING DATE	JOB NO.	DRAWING NO.	REV
4/24/03	838409	AB-12	0

SUMP ID	COORDINATES		INSIDE CASING DIAMETER (IN)	TOP OF SUMP ELEV BEFORE RW (FT MSL)	AS-BUILT TOP OF SUMP ELEV.[1] (FT MSL)	AS-BUILT GRADE ELEV. AT SUMP (FT MSL)	ACTION TAKEN
	NORTHING	EASTING					
1-1	277453	2195284	*N/A	1054.8	-	-	Abandon
1-2	277426	2195325	12.0	1053.1	1056.17	1055.30	Pull - Keep and Monitor
1-3	277458	2195269	10.0	1054.6	-	-	Drop - Abandon
1-S	277298	2194984	*N/A	1057.1	-	-	Drop - Abandon
1-S2	277293	2194992	12.0	1056.0	-	-	Drop - Abandon
2-4	277212	2195108	12.0	1051.2	-	-	Abandon
2-5	277220	2195095	12.0	1051.4	-	-	Abandon
2-6	277230	2195081	12.0	1052.5	1057.51	1055.59	Pull - Keep and Monitor
3-2	277296	2195031	14.0	1057.9	1059.45	1057.83	Pull - Keep and Monitor
3-3	277266	2195083	10.0	1055.8	-	-	Drop - Abandon
3-4	277230	2195144	12.0	1052.8	1054.33	1052.99	Pull - Keep and Monitor
3-5	277201	2195170	10.0	1050.6	-	-	Drop - Abandon
3-6	277324	2195006	*N/A	1057.6	-	-	Abandon
3-7	277238	2195128	*N/A	1053.8	-	-	Abandon
4-L	277289	2195180	*N/A	1051.9	-	-	Pull - Abandon
5-S2	277334	2195283	12.0	1053.2	-	-	Drop - Abandon
5-S3	277346	2195299	*N/A	1053.6	-	-	Abandon
6-L	277271	2195206	*N/A	1051.4	-	-	Abandon
7-2	277328	2195053	*N/A	1055.9	-	-	Drop - Abandon
7-3	277264	2195145	7.5	1053.4	-	-	Drop - Abandon
7-4	277225	2195191	12.0	1050.8	1052.42	1051.00	Pull - Keep and Monitor
7-5	277296	2195098	10.0	1054.9	1057.95	1055.68	Pull - Keep and Monitor
7-6	277348	2195028	*N/A	1056.3	-	-	Drop - Abandon
7-7	277340	2195038	10.0	1056.0	1059.01	1057.91	Pull - Keep and Monitor
7-8	277240	2195170	10.0	1051.9	-	-	Drop - Abandon
7-9	277256	2195167	*N/A	1051.7	-	-	Drop - Abandon
8-L	277261	2195236	*N/A	1050.9	-	-	Pull - Abandon
9-L	277193	2195231	6.0	1048.0	-	-	Drop - Abandon
10-3	277194	2194941	12.0	1059.1	-	-	Drop - Abandon
10-4	277164	2194993	*N/A	1057.8	-	-	Drop - Abandon
10-5	277130	2195054	10.0	1055.8	-	-	Drop - Abandon
10-7	277200	2194948	10.0	1058.7	1060.34	1058.53	Pull - Keep and Monitor
10-8	277150	2195014	10.0	1057.1	1058.78	1057.18	Pull - Keep and Monitor
10-9	277092	2195089	10.0	1053.3	1054.92	1052.70	Pull - Keep and Monitor
10-10	277143	2195022	*N/A	1056.9	-	-	Abandon
11-S/W	277100	2194889	12.0	1061.2	-	-	Drop - Abandon
11-S/E	277031	2194999	12.0	1057.8	-	-	Drop - Abandon
11-4	277066	2194944	10.0	1060.3	-	-	Drop - Abandon
11-5	277001	2195029	10.0	1055.4	1057.08	1055.42	Pull - Keep and Monitor
11-6	277111	2194872	10.0	1061.5	1063.22	1061.82	Pull - Keep and Monitor
11-7	277045	2194973	10.0	1059.2	-	-	Abandon
12-L	277196	2195220	*N/A	1048.6	-	-	Abandon
13-L	276825	2194978	*N/A	1052.2	-	-	Abandon
14-L	276848	2195000	*N/A	1051.7	-	-	Pull - Abandon
15-4	277154	2194916	10.0	1060.4	1062.04	1060.30	Pull - Keep and Monitor
15-5	277123	2194955	10.0	1059.5	1061.21	1059.77	Pull - Keep and Monitor
15-6	277087	2195011	10.0	1057.8	1059.46	1057.63	Pull - Keep and Monitor
15-7	277117	2194964	*N/A	1059.4	-	-	Drop - Abandon
15-8	277051	2195066	10.0	1054.2	1055.85	1053.67	Pull - Keep and Monitor
16-L	276896	2195030	*N/A	1050.5	-	-	Abandon
17-L	276876	2194993	*N/A	1053.1	-	-	Drop - Abandon
18-E	276917	2194917	7.5	1059.6	-	-	Drop - Abandon
18-W	276998	2194802	*N/A	1063.6	-	-	Abandon
18-5	276945	2194851	10.0	1062.8	-	-	Drop - Abandon
18-6	276982	2194790	10.0	1063.8	1065.42	1064.01	Pull - Keep and Monitor
18-7	276928	2194889	10.0	1061.3	-	-	Drop - Abandon
18-8	276968	2194818	10.0	1063.4	-	-	Drop - Abandon
18-9	276887	2194934	10.0	1057.9	1059.54	1058.20	Monitor
19-W	277068	2194841	*N/A	1062.7	-	-	Abandon
19-E	276980	2194964	7.5	1058.6	-	-	Drop - Abandon
19-5	277023	2194902	10.0	1061.5	1063.23	1061.77	Pull - Keep and Monitor
19-6	276957	2194996	10.0	1056.2	1058.71	1056.39	Pull - Keep and Monitor
19-7	277049	2194859	10.0	1062.6	1064.26	1062.46	Pull - Keep and Monitor
19-8	276987	2194953	*N/A	1059.2	-	-	Drop - Abandon
20-E	276864	2194888	12.0	1059.9	-	-	Abandon
20-W	276944	2194765	12.0	1064.0	1065.49	1063.70	Pull - Keep and Monitor
20-5	276910	2194791	10.0	1063.6	-	-	Drop - Abandon
20-6	276838	2194900	*N/A	1058.4	-	-	Abandon
20-7	276864	2194861	10.0	1061.1	1063.29	1061.45	Pull - Keep and Monitor
20-8	276936	2194750	*N/A	1063.2	-	-	Abandon
20-9	276912	2194805	10.0	1063.2	1065.36	1063.28	Pull - Keep and Monitor
20-10	276883	2194839	10.0	1062.1	-	-	Abandon
20-11	276836	2194914	10.0	1057.4	1059.06	1057.32	Pull - Keep and Monitor
20-12	276936	2194755	10.0	1063.5	-	-	Abandon
22-L	276901	2194975	*N/A	1056.6	-	-	Abandon
23-4	276790	2194873	10.0	1057.8	-	-	Drop - Abandon
23-5	276832	2194811	10.0	1061.4	1063.61	1061.48	Pull - Keep and Monitor
23-6	276862	2194770	10.0	1062.6	1064.28	1062.25	Pull - Keep and Monitor
23-7	276875	2194724	10.0	1061.9	-	-	Drop - Abandon
23-8	276806	2194836	*N/A	1059.7	-	-	Abandon
23-9	276776	2194882	10.0	1056.8	1059.08	1056.61	Pull - Keep and Monitor
24-3	276740	2194814	7.5	1057.7	-	-	Drop - Abandon
24-4	276773	2194763	10.0	1060.2	-	-	Drop - Abandon
24-5	276729	2194830	10.0	1057.2	1058.86	1056.85	Pull - Keep and Monitor
24-6	276813	2194700	10.0	1060.2	1062.47	1060.40	Pull - Keep and Monitor
24-7	276826	2194695	10.0	1060.0	-	-	Drop - Abandon
24-8	276797	2194736	*N/A	1060.3	-	-	Abandon
24-9	276760	2194786	10.3	1059.2	-	-	Drop - Abandon
25-3	276775	2194674	12.0	1059.0	-	-	Drop - Abandon
25-4	276690	2194796	10.0	1056.5	-	-	Drop - Abandon
25-5	276719	2194755	10.0	1058.2	1059.82	1058.05	Pull - Keep and Monitor
25-6	276753	2194707	10.0	1058.8	-	-	Drop - Abandon
25-7	276784	2194655	10.0	1058.6	1060.71	1059.21	Pull - Keep and Monitor
25-8	276738	2194728	*N/A	1058.4	-	-	Drop - Abandon
25-9	276672	2194814	10.0	1054.9	1057.05	1054.89	Pull - Keep and Monitor
26-2	276731	2194632	12.0	1056.1	1059.31	1057.38	Pull - Keep and Monitor
26-3	276660	2194731	12.0	1054.9	1058.38	1055.48	Pull - Keep and Monitor
26-4	276640	2194760	12.0	1054.8	1056.44	1054.39	Pull - Keep and Monitor
26-5	276685	2194698	*N/A	1055.7	-	-	Drop - Abandon
26-6	276712	2194655	10.0	1055.7	-	-	Drop - Abandon
26-7	276649	2194748	10.0	1054.8	-	-	Drop - Abandon
26-8	276680	2194705	10.0	1055.3	-	-	Drop - Abandon
27-M	276939	2194337	*N/A	1061.3	-	-	Abandon
27-5	276870	2194469	10.0	1059.0	-	-	Drop - Abandon
27-6	276927	2194398	*N/A	1061.5	-	-	Abandon

[1] REFERENCED TO TOP OF SUMP FLANGE. NOT TOP OF SUMP COVER.

SUMP ID	COORDINATES		INSIDE CASING DIAMETER (IN)	TOP OF SUMP ELEV BEFORE RW (FT MSL)	AS-BUILT TOP OF SUMP ELEV.[1] (FT MSL)	AS-BUILT GRADE ELEV. AT SUMP (FT MSL)	ACTION TAKEN
	NORTHING	EASTING					
27-7	276978	2194313	10.0	1062.5	-	-	Abandon
27-8	276907	2194394	*N/A	1060.7	-	-	Abandon
27-9	276883	2194418	10.0	1059.7	1062.84	1060.74	Pull - Keep and Monitor
27-10	276920	2194340	10.0	1061.2	-	-	Abandon
27-11	276996	2194277	10.0	1061.6	1064.78	1062.45	Monitor
28-W	277049	2194320	12.0	1062.6	1064.15	1061.44	Pull - Keep and Monitor
28-M	276951	2194472	12.0	1063.0	-	-	Abandon
28-4	277046	2194325	*N/A	1062.7	-	-	Abandon
28-6	276934	2194498	10.0	1061.4	1064.58	1062.16	Pull - Keep and Monitor
28-7	277008	2194383	10.0	1063.7	-	-	Drop - Abandon
28-8	277037	2194368	*N/A	1063.4	-	-	Abandon
28-9	277004	2194415	*N/A	1064.2	-	-	Abandon
28-10	276972	2194464	*N/A	1062.8	-	-	Abandon
28-11	276928	2194532	10.0	1060.6	1063.79	1062.02	Monitor
28-12	277028	2194362	12.0	1063.3	1065.48	1064.02	Monitor
29-W	277106	2194352	12.0	1061.9	1063.52	1061.65	Pull - Keep and Monitor
29-3	277124	2194363	*N/A	1061.3	-	-	Abandon
29-4	277071	2194446	10.0	1064.4	-	-	Abandon
29-5	277001	2194553	10.0	1063.3	1066.43	1063.89	Monitor
29-6	277110	2194376	10.0	1062.6	1064.24	1062.19	Pull - Keep and Monitor
29-7	277080	2194422	*N/A	1064.4	-	-	Abandon
29-8	277052	2194463	10.1	1065.0	-	-	Abandon
29-9	277014	2194515	10.1	1064.0	-	-	Abandon
29-10	277102	2194388	*N/A	1063.0	-	-	Abandon
30-E	277073	2194595	12.0	1064.6	-	-	Abandon
30-M	277149	2194469	*N/A	1063.1	-	-	Abandon
30-4	277189	2194406	10.0	1060.1	1062.29	1059.98	Monitor
30-5	277111	2194530	10.0	1065.1	-	-	Drop - Abandon
30-6	277178	2194424	*N/A	1061.3	-	-	Abandon
30-7	277147	2194481	*N/A	1064.0	-	-	Abandon
30-8	277121	2194536	10.0	1065.1	1067.21	1066.26	Pull - Keep and Monitor
30-9	277091	2194564	10.0	1064.9	-	-	Abandon
30-10	277046	2194638	10.0	1063.0	1066.15	1064.35	Monitor
31-2	277147	2194646	10.0	1063.7	1065.86	1064.54	Pull - Keep and Monitor
31-3	277219	2194515	11.3	1063.0	-	-	Drop - Abandon
31-4	277183	2194581	10.0	1064.1	-	-	Drop - Abandon
31-5	277255	2194447	10.0	1059.9	1062.13	1059.67	Pull - Keep and Monitor
31-6	277170	2194634	*N/A	1064.1	-	-	Drop - Abandon
31-7	277119	2194699	10.0	1062.2	1065.30	1063.74	Monitor
31-8	277260	2194500	*N/A	1061.2	-	-	Abandon
31-9	277214	2194542	10.0	1063.3	1066.46	1064.05	Pull - Keep and Monitor
31-10	277170	2194614	10.0	1064.1	-	-	Drop - Abandon
31-11	277238	2194488	10.0	1061.3	-	-	Drop - Abandon
32-E	277224	2194700	12.0	1062.6	1064.75	1063.46	Monitor
32-W	277308	2194582	11.8	1062.8	-	-	Abandon
32-4	277265	2194643	10.0	1063.2	-	-	Drop - Abandon
32-7	277311	2194563	9.0	1062.0	-	-	Abandon
32-8	277245	2194673	*N/A	1062.8	-	-	Abandon
32-9	277289	2194603	10.0	1063.1	1065.27	1063.84	Pull - Keep and Monitor
33-1	277642	2195001	*N/A	1058.8	-	-	Pull - Abandon
33-2	277571	2194953	*N/A	1060.5	-	-	Abandon
33-3	277581	2194955	*N/A	1060.4	-	-	Pull - Abandon
33-4	277633	2194956	*N/A	1060.2	-	-	Pull - Abandon
33-5	277589	2194896	*N/A	1061.6	-	-	Pull - Abandon
33-6	277683	2194948	*N/A	1058.2	-	-	Pull - Abandon
33-7	277675	2194929	*N/A	1059.4	-	-	Pull - Abandon
33-8	277624	2194888	*N/A	1060.3	-	-	Pull - Abandon
33-9	277625	2194861	*N/A	1060.1	-	-	Drop - Abandon
33-10	277689	2194884	*N/A	1059.2	-	-	Pull - Abandon
33-11	277736	2194874	*N/A	1057.3	-	-	Pull - Abandon
33-12	277725	2194857	*N/A	1057.8	-	-	Pull - Abandon
33-13	277686	2194849	*N/A	1058.9	-	-	Pull - Abandon
33-14	277667	2194797	2.0	1058.4	-	-	Drop - Abandon
33-15	277698	2194784	*N/A	1057.2	-	-	Abandon
33-16	277740	2194801	2.0	1056.3	-	-	Pull - Abandon
33-17	277785	2194822	*N/A	1055.1	-	-	Pull - Abandon
33-18	277724	2194745	*N/A	1055.1	-	-	Drop - Abandon
33-19	277632	2194825	*N/A	1058.9	-	-	Abandon
34-1	276927	2194659	*N/A	1060.2	-	-	Abandon
34-2	276991	2194702	*N/A	1062.2	-	-	Abandon
34-3	277020	2194718	*N/A	1062.5	-	-	Abandon
34-4	277023	2194720	*N/A	1062.7	-	-	Abandon
35-1	277401	2194783	*N/A	1059.9	-	-	Abandon
35-2	277397	2194766	12.0	1059.9	1064.08	1061.00	Pull - Keep and Monitor
35-3	277423	2194669	11.5	1061.9	-	-	Drop - Abandon
35-4	277352	2194796	10.0	1059.2	-	-	Abandon
35-5	277407	2194724	10.0	1061.3	-	-	Drop - Abandon
35-6	277463	2194648	10.0	1060.7	1063.00	1060.81	Pull - Keep and Monitor
35-7	277489	2194623	10.0	1059.2	-	-	Abandon
35-8	277401	2194733	9.0	1061.1	-	-	Drop - Abandon
36-E	277421	2194855	4.0	1060.8	-	-	Pull - Abandon Small Dia.
36-3	277529	2194695	10.0	1061.0	1062.52	1061.14	Pull - Keep and Monitor
36-4	277493	2194744	10.0	1062.3	-	-	Drop - Abandon
36-5	277453	2194797	*N/A	1060.0	-	-	Drop - Abandon
36-6	277403	2194843	10.0	1059.1	1066.55	1063.06	Pull - Keep and Monitor
36-7	277472	2194760	10.0	1061.5	1064.64	1062.18	Pull - Keep and Monitor
37-1	276517	2194866	4.0	1053.0	-	-	Pull - Abandon Small Dia.
37-2	276626	2194944	*N/A	1054.8	-	-	Abandon
37-3	276540	2194869	10.0	1053.6	1055.27	1053.45	Pull - Keep and Monitor
37-4	276620	2194928	10.0	1054.1	1055.86	1053.60	Monitor
37-5	276594	2194910	10.0	1053.6	-	-	Drop - Abandon
38-1	276479	2194956	4.0	1053.2	-	-	Drop - Abandon
38-2	276537	2194971	7.5	1054.5	-	-	Drop - Abandon
38-3	276486	2194949	10.0	1054.5	-	-	Drop - Abandon
38-4	276541	2194987	10.0	1054.1	1055.75	1053.10	Pull - Keep and Monitor
38-5	276513	2194968	10.0	1054.0	1055.53	1053.33	Pull - Keep and Monitor
38-6	276587	2195019	10.0	1052.6	-	-	Drop - Abandon
39-1	276502	2194928	4.0	1054.9	1056.84	1053.99	Pull - Keep and Monitor Small Dia.
39-2	276563	2194954	7.5	1056.0	-	-	Drop - Abandon
39-3	276509	2194920	10.0	1055.1	1056.93	-	Drop - Abandon
39-4	276587	2194978	10.0	1055.2	-	1054.36	Monitor
39-5	276555	2194949	10.0	1055.4	-	-	Drop - Abandon
40-1	277313	2195434	11.6	1051.3	-	-	Drop - Abandon
40-2	277406	2195456	8.0	1052.3	-	-	Drop - Abandon

[1] REFERENCED TO TOP OF SUMP FLANGE. NOT TOP OF SUMP COVER.

SUMP ID	COORDINATES		INSIDE CASING DIAMETER (IN)	TOP OF SUMP ELEV BEFORE RW (FT MSL)	AS-BUILT TOP OF SUMP ELEV.[1] SEE NOTE 1 (FT MSL)	AS-BUILT GRADE ELEV. AT SUMP (FT MSL)	ACTION TAKEN
	NORTHING	EASTING					
40-3	277468	2195540	12.0	1053.5		-	Drop - Abandon
40-5	277588	2195612	*N/A	1053.6	-	-	Abandon
40-6	277548	2195585	11.0	1053.7	-	-	Drop - Abandon
40-11	277298	2195417	11.0	1051.3	-	-	Drop - Abandon
40-14	277187	2195317	10.0	1047.7	-	-	Keep Under Liner
40-15	277134	2195304	10.0	1045.7	1047.28	1045.71	Pull - Keep and Monitor
40-16	277260	2195387	10.0	1050.3	-	-	Drop - Abandon
40-17	277279	2195402	10.0	1052.9	1052.66	1051.00	Pull - Keep and Monitor
40-18	277340	2195446	10.0	1051.9	-	-	Drop - Abandon
40-19	277424	2195500	10.0	1051.0	1054.59	1053.12	Pull - Keep and Monitor
40-20	277389	2195473	10.0	1052.9	-	-	Drop - Abandon
40-21	277236	2195375	10.0	1049.5	-	-	Drop - Abandon
40-22	277502	2195560	10.0	1053.9	1056.95	1054.82	Pull - Keep and Monitor
41	277351	2194651	*N/A	1064.4	-	-	Abandon
42-5	277518	2195726	*N/A	1052.2	-	-	Abandon
42-6	277465	2195715	*N/A	1050.8	-	-	Abandon
42-7	277418	2195661	10.0	1051.0	-	-	Pull - Keep Under Liner
42-11	277267	2195561	10.0	1047.8	1049.49	1048.09	Pull - Keep and Monitor
42-17	277393	2195644	*N/A	1050.4	-	-	Abandon
42-18	277112	2195458	*N/A	1043.3	-	-	Abandon
42-19	277154	2195519	10.0	1043.9	1046.99	1043.88	Pull - Keep and Monitor
42-20	277371	2195630	10.0	1050.0	1052.04	1049.86	Pull - Keep and Monitor
42-21	277309	2195609	10.0	1047.8	-	-	Drop - Abandon
43-7	277347	2195715	10.0	1045.1	1047.17	1045.88	Pull - Keep and Monitor
43-9	277264	2195660	10.0	1043.6	1045.19	1043.76	Pull - Keep and Monitor
43-10	277234	2195615	10.0	1044.0	-	-	Pull - Keep Under Liner
43-11	277182	2195604	*N/A	1041.5	-	-	Abandon
43-12	277151	2195559	10.0	1042.0	-	-	Pull - Keep Under Liner
43-13	277098	2195548	10.0	1039.4	1041.02	1040.29	Pull - Keep and Monitor
43-15	277059	2195530	*N/A	1037.3	-	-	Abandon
43-16	277292	2195667	10.0	1044.8	-	-	Abandon
43-17	277482	2195792	*N/A	1048.7	-	-	Abandon
44-3	277475	2195610	12.0	1054.1	-	-	Pull - Keep Under Liner
44-4	277595	2195700	10.0	1053.9	-	-	Abandon
44-5	277557	2195665	10.0	1054.3	1057.33	1055.17	Pull - Keep and Monitor
44-7	277462	2195604	10.0	1053.6	-	-	Drop - Abandon
44-8	277426	2195592	10.0	1052.8	-	-	Keep Under Liner
44-10	277342	2195539	10.0	1051.4	-	-	Drop - Abandon
44-14	277173	2195430	10.0	1046.8	1048.42	1046.62	Monitor
44-19	277146	2195396	10.0	1045.9	-	-	Abandon
44-20	277244	2195464	10.0	1049.2	1052.25	1049.58	Pull - Keep and Monitor
44-21	277304	2195508	10.0	1050.6	-	-	Abandon
44-22	277403	2195570	10.0	1052.8	1055.02	1053.09	Pull - Keep and Monitor
45-1	276669	2195024	7.0	1052.9	1054.78	1052.02	Pull - Keep and Monitor Small Dia.
45-2	276650	2195053	10.0	1051.2	-	-	Drop - Abandon
46-1.	276470	2195008	30.0	1052.5	1054.17	1051.54	Pull - Keep and Monitor
46-2	276518	2195048	30.0	1051.2	1052.89	1050.37	Pull - Keep and Monitor
46-3	276546	2195086	7.0	1050.5	1052.27	1048.09	Pull - Keep and Monitor Small Dia.
47-E	277525	2194760	7.5	1062.1	-	-	Drop - Abandon
47-W	277592	2194687	7.5	1059.1	-	-	Abandon
48-E	277691	2195742	12.0	1053.0	-	-	Drop - Abandon
48-W	277732	2195720	12.0	1053.6	-	-	Drop - Abandon
49-1	277666	2195551	7.5	1053.9	-	-	Drop - Abandon
49-DW	277772	2195601	10	1055.4	-	-	Drop - Abandon
50-1	277510	2195372	6.0	1062.4	-	-	Abandon
50-2	277530	2195385	6.0	1063.8	-	-	Abandon
50-3	277548	2195392	6.0	1063.3	-	-	Abandon
50-DW	277542	2195429	34	1059.5	-	-	Abandon
51	277587	2195218	7.5	1059.6	-	-	Drop - Abandon
52-1	277746	2195480	7.0	1058.6	-	-	Drop - Abandon
52-DW	277733	2195534	7.8	1058.5	-	-	Abandon
SLT-1	276420	2194875	6.0	1053.3	-	-	Pull - Abandon Small Dia.
SLT-2	276268	2195090	6.0	1048.3	-	-	Pull - Abandon Small Dia.
SLT-3	276349	2195145	6.0	1047.7	-	-	Pull - Abandon Small Dia.
SLT-4	276436	2194962	6.0	1054.6	-	-	Pull - Abandon Small Dia.

[1] REFERENCED TO TOP OF SUMP FLANGE. NOT TOP OF SUMP COVER.

NRC SUMP TABLE			
SUMP ID	COORDINATES		AS-BUILT TOP OF SUMP ELEV (FT MSL)
	NORTHING	EASTING	
NRC1	276854	2194381	1059.07
NRC2	276849	2194389	1058.87
NRC3	276831	2194402	1058.36
NRC4	276836	2194380	1058.98
NRC5	276818	2194423	1057.80
NRC6	276821	2194433	1057.90
NRC7	276817	2194441	1057.42
NRC8	276804	2194433	1057.19
NRC9	276787	2194475	1056.20
NRC10	276789	2194490	1055.89
NRC11	276824	2194445	1057.17
NRC12	276800	2194450	1056.79

SURVEYOR'S CERTIFICATION

I certify that this drawing depicts details of a topographical survey conducted by me or under my direction. This certification pertains to planimetric and vertical locations only. See Civil General Note #2 at Sheet AB-3 for horizontal and vertical origins.

Richey B. Newton — 3674 KY PLS — 6/17/03 Date

NO	DATE	REVISION	ASBLT BY	DR BY	CHKD	ENGR	PROJ MGR	APPR
0	06/17/03	AS-BUILT	JW	JW	LS			

Shaw Environmental, Inc.

AS-BUILT BY: JW; CHECKED BY: LS; DRAWN BY: JW; DRAFTING CHECK BY: Brian Stark; ENGINEER/SURVEYOR APPROVAL: Richard B. Newton; PROJECT MANAGER: Michael R. Crapps

CONFIDENTIAL PROPERTY OF SHAW ENVIRONMENTAL, INC.

THIS DRAWING AND ALL INFORMATION THEREON IS CONFIDENTIAL AND MUST NOT BE MADE PUBLIC OR COPIED UNLESS DULY AUTHORIZED, SHALL NOT BE USED EXCEPT FOR THE PURPOSE FOR WHICH IT WAS SUPPLIED, AND IS SUBJECT TO RETURN ON DEMAND. ALL RIGHTS OF INVENTION OR DESIGN ARE RESERVED.

STATE OF KENTUCKY — RICHARD B. NEWTON — LICENSED PROFESSIONAL ENGINEER — 6-17-03

STATE of KENTUCKY — R.B. NEWTON 3674 — LICENSED PROFESSIONAL LAND SURVEYOR

ENGINEER / SURVEYOR SEAL

MAXEY FLATS DISPOSAL SITE
FLEMING COUNTY, KENTUCKY

SUMP TABLES (AS-BUILT)

STARTING DATE	JOB NO.	DRAWING NO.	REV
5/28/03	838409	AB-13	0

\\Lexington_fiels_2\As-Built Drawings\MF-AB38_1-13.dgn 12:01:32 PM 06/16/03 lestters

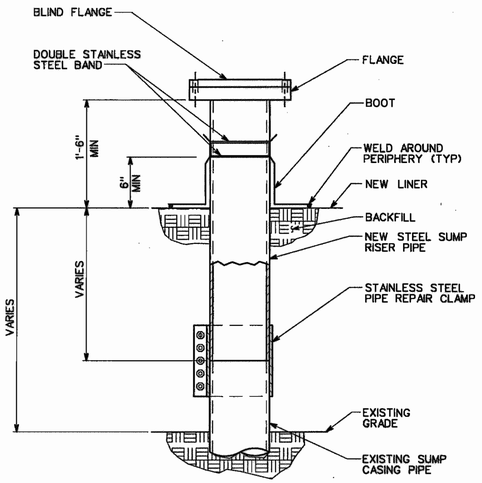

DETAIL TYPICAL SUMP EXTENSION (1) AB-14 AB-14
SCALE: NTS

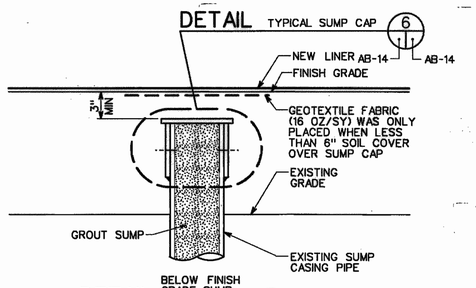

DETAIL TYPICAL SUMP CAP (6) AB-14 AB-14

DETAIL BELOW FINISH GRADE SUMP ABANDONMENT (2) AB-14 AB-14
SCALE: NTS

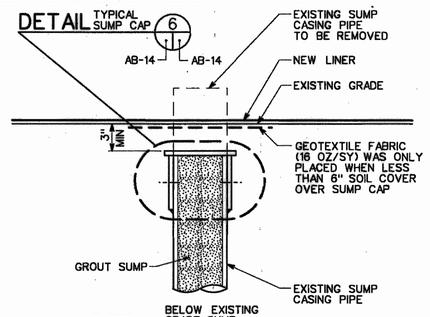

DETAIL TYPICAL SUMP CAP (6) AB-14 AB-14

DETAIL BELOW EXISTING GRADE SUMP ABANDONMENT (3) AB-14 AB-14
SCALE: NTS

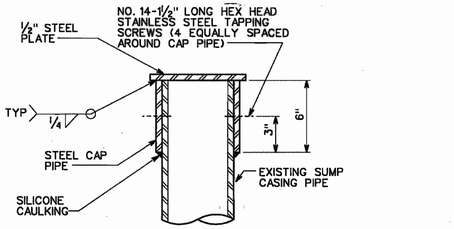

DETAIL TYPICAL SUMP CAP (6) AB-14 AB-14
SCALE: NTS

NOTES:

1. PURSUANT TO AGREEMENT WITH COMMONWEALTH OF KENTUCKY AND APPROVED BY EPA, COMMONWEALTH OF KENTUCKY WILL REMOVE AND DISPOSE OF ALL 36 GLOBAL WATER LEVEL SUMP INSTRUMENTATION AND INSTALL WATER LOG INSTRUMENTATION WITH PROTECTIVE ENCLOSURES (SUPPLIED BY SPP's). SEE SECTION 2.3.3 IRP CAP CONSTRUCTION TABLE 2.8 FINAL SUMP DISPOSITION AND MONITORING DEVICES OF THE IRP RA CONSTRUCTION REPORT FOR LOCATIONS OF SPECIFIC MONITORING INSTRUMENTATION.

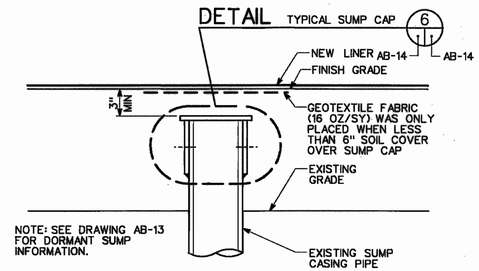

DETAIL TYPICAL SUMP CAP (6) AB-14 AB-14

DETAIL BELOW FINISH GRADE DORMANT SUMP (4) AB-14 AB-14
SCALE: NTS

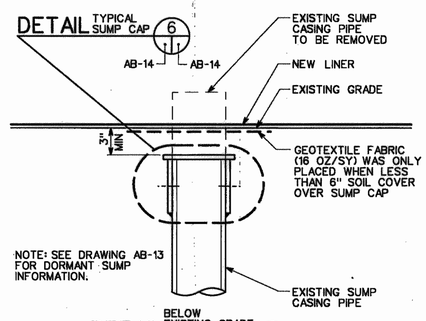

DETAIL TYPICAL SUMP CAP (6) AB-14 AB-14

DETAIL BELOW EXISTING GRADE DORMANT SUMP (5) AB-14 AB-14
SCALE: NTS

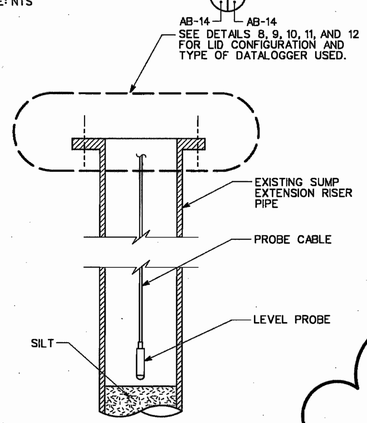

DETAIL SUMP EXTENSION WITH LEACHATE LEVEL MONITOR (7) AB-14 AB-14
SCALE: NTS

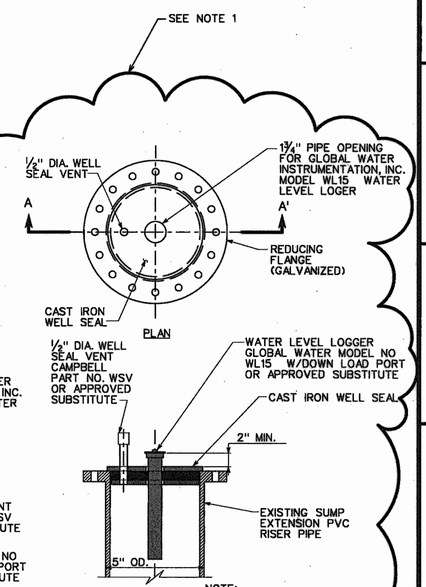

NOTE:
1. DETAIL FOR SUMP 39-1.

SECTION A-A'

DETAIL COMMITTEE WATER LEVEL DATA LOGGER SUMP CAP (12) AB-14 AB-14
SCALE: NTS

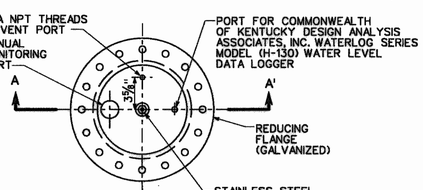

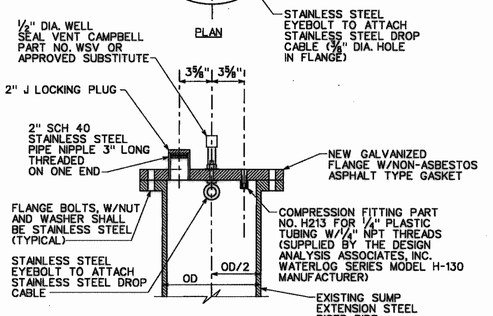

SECTION A-A'

NOTE:
1. TYPICAL SUMP CAP DETAIL FOR DESIGN ANALYSIS ASSOCIATES, INC. WATERLOG SERIES MODEL (H-130) WATER LEVEL DATA LOGGER, PROVIDED BY THE COMMONWEAL OF KENTUCKY.

DETAIL COMMONWEALTH OF KENTUCKY WATER LEVEL DATA LOGGER SUMP CAP (8) AB-14 AB-14
SCALE: NTS

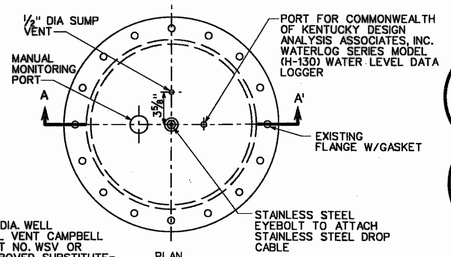

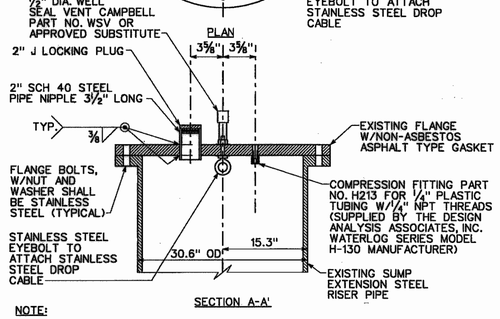

SECTION A-A'

NOTE:
1. DETAIL FOR SUMP 46-1 AND 46-2.
2. SUMP CAP DETAIL FOR DESIGN ANALYSIS ASSOCIATES, INC. WATERLOG SERIES MODEL (H-130) WATER LEVEL DATA LOGGER, PROVIDED BY THE COMMONWEAL OF KENTUCKY.

DETAIL COMMONWEALTH OF KENTUCKY WATER LEVEL DATA LOGGER SUMP CAP (9) AB-14 AB-14
SCALE: NTS

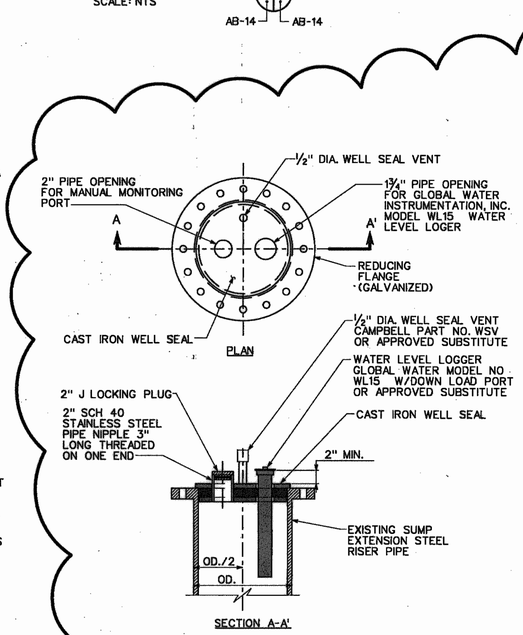

SECTION A-A'

DETAIL COMMITTEE WATER LEVEL DATA LOGGER SUMP CAP (10) AB-14 AB-14
SCALE: NTS

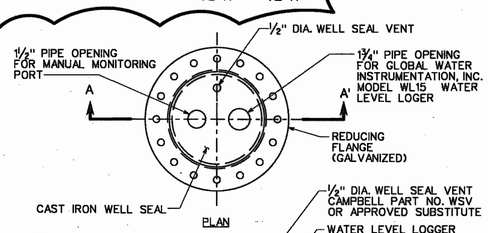

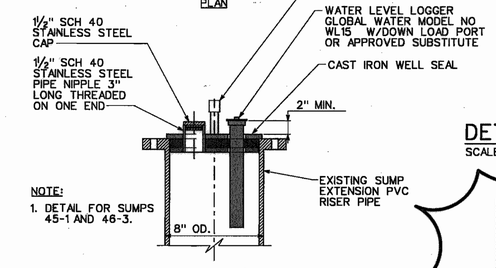

NOTE:
1. DETAIL FOR SUMPS 45-1 AND 46-3.

SECTION A-A'

DETAIL COMMITTEE WATER LEVEL DATA LOGGER SUMP CAP (11) AB-14 AB-14
SCALE: NTS

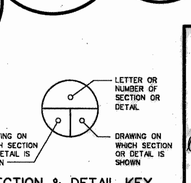

SECTION & DETAIL KEY

STATE OF KENTUCKY SAMUEL R. MAXEY 25591 LICENSED PROFESSIONAL ENGINEER
6-17-03
ENGINEER / SURVEYOR SEAL

NO	DATE	REVISION	ASBLT BY	DR BY	CHKD	ENGR	PROJ MGR	APPR
0	06/17/03	AS-BUILT	JW	JW		CS		

AS-BUILT BY: JW Wade
CHECKED BY:
DRAWN BY: JW Wade
DRAFTING CHECK BY:
ENGINEER/SURVEYOR APPROVAL: Samuel R. Maxey
PROJECT MANAGER: Michael Clapp

Shaw Shaw Environmental, Inc.

CONFIDENTIAL PROPERTY OF SHAW ENVIRONMENTAL, INC.

THIS DRAWING AND ALL INFORMATION THEREON IS CONFIDENTIAL AND MUST NOT BE MADE PUBLIC OR COPIED UNLESS DULY AUTHORIZED, SHALL NOT BE USED EXCEPT FOR THE PURPOSE FOR WHICH IT WAS SUPPLIED, AND IS SUBJECT TO RETURN ON DEMAND. ALL RIGHTS OF INVENTION OR DESIGN ARE RESERVED.

MAXEY FLATS DISPOSAL SITE
FLEMING COUNTY, KENTUCKY

SUMP MODIFICATION DETAILS
(AS-BUILT)

STARTING DATE	JOB NO.	DRAWING NO.	REV
4/04/03	838409	AB-14	0

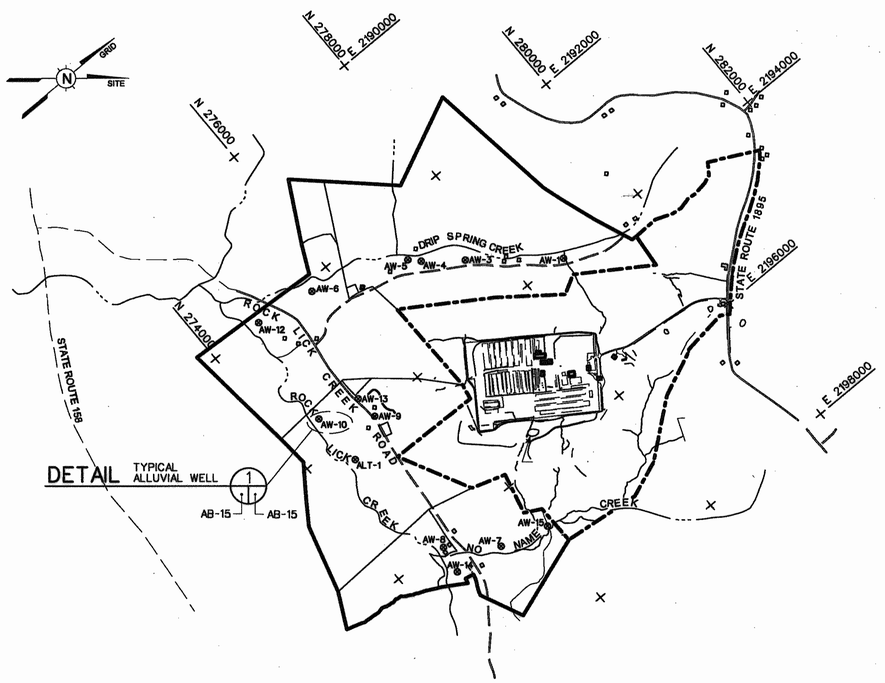

ALLUVIAL WELL LOCATIONS

SCALE:1"=1000'-0"

ALLUVIAL WELL TABLE

Well ID	Coordinates		TOC Elevation	Ground Elevation	Top Screen	Bottom Screen	Casing Diameter	Borehole Diameter	Date Installed
	Northing	Easting	(ft, msl)	(ft, msl)	(ft bgs)	(ft bgs)	(in)	(in)	
AW-1	278628.385	2194030.732	764.78	762.26	19	24	2	6	10/3/01
AW-3	277559.9866	2193170.79	731.42	729.00	12.5	17.5	2	6	10/3/01
AW-4	277077.0517	2192790.706	712.64	709.79	8.5	13.5	2	6	10/4/01
AW-5	276945.7271	2192655.569	705.63	703.14	9.5	10.5	2	6	10/4/01
AW-6	275635.3797	2192137.572	682.70	680.28	11.5	16.5	2	6	10/5/01
AW-7	275393.1288	2196562.157	718.01	715.61	12.5	17.5	2	6	10/5/01
AW-8	274764.9418	2196059.08	701.30	698.56	12.5	17.5	2	6	10/2/01
AW-9	275193.6367	2194040.024	720.45	718.17	9	14	2	6	10/1/01
AW-10	274569.3774	2193570.358	679.09	676.49	11	16	2	6	10/2/01
AW-12	274782.8129	2191996.923	668.51	665.66	10	15	2	6	10/2/01
AW-13	275173.2262	2193703.106	730.73	728.27	14	19	2	6	10/1/01
AW-14	274693.0987	2196445.909	706.07	703.25	12.5	17.5	2	6	10/2/01
AW-15	276069.209	2196761.604	735.50	725.60	14.5	19.5	2	6	10/2/01
ALT-1	274596.6748	2194332.996	686.57	684.27	12.5	17.5	2	6	10/4/01

SEE NOTE 2

NOTES:

1. BOLLARDS WERE INSTALLED AT THE FOLLOWING ALLUVIAL WELLS AW-1, AW-3, AW-4, AW-5, AW-6, AW-7, AW-8, AW-9, AW-10, AW-12, AW-13, AW-14, AND ALT-1.
2. NORTHING, EASTING, AND ELEVATIONS WERE SURVEYED BY CURD SURVEYING, ENGINEERING & LAND CONSULTING, INC.

LEGEND

- BUILDING
- ROADS
- CURRENT SITE PROPERTY BOUNDARY (SEE GENERAL NOTE 2 ON DRAWING AB-3)
- LICENSED SITE BOUNDARY (SEE GENERAL NOTE 2 ON DRAWING AB-3)
- CREEK
- AW-1 ALLUVIAL WELL LOCATIONS

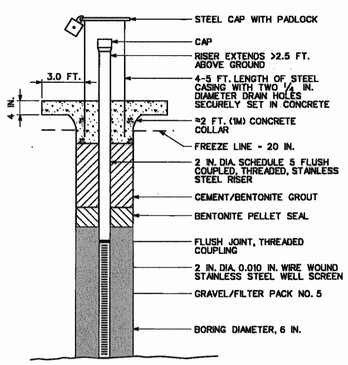

DETAIL TYPICAL ALLUVIAL WELL 1
NOT TO SCALE
AB-15 AB-15

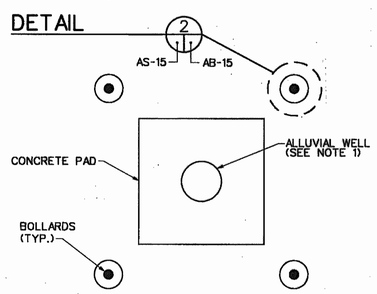

DETAIL TYPICAL BOLLARDS LAYOUT
NOT TO SCALE

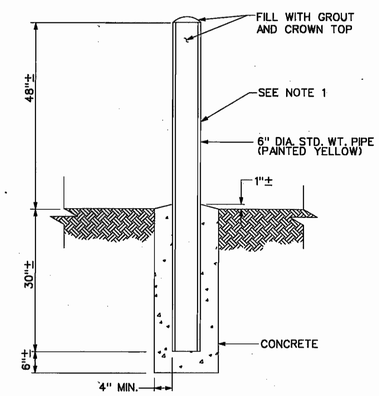

DETAIL 2
SCALE: NTS
AB-15 AB-15

SCALE: 1"=1000'
0 1000 2000 FEET
GRAPHIC SCALE

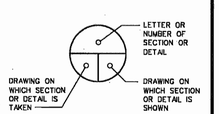

SECTION & DETAIL KEY

STATE OF KENTUCKY SAMUEL R. MAYES 22291 LICENSED PROFESSIONAL ENGINEER
6-17-03
ENGINEER / SURVEYOR SEAL

NO	DATE	REVISION	ASBLT BY	DR BY	CHKD	ENGR	PROJ MGR	APPR
0	06/17/03	AS-BUILT	JW	JW	LS			

Shaw Environmental, Inc.

AS-BUILT BY: DRAWN BY:
CHECKED BY: DRAFTING CHECK BY:
ENGINEER/SURVEYOR APPROVAL: PROJECT MANAGER:

CONFIDENTIAL PROPERTY OF SHAW ENVIRONMENTAL, INC.

THIS DRAWING AND ALL INFORMATION THEREON IS CONFIDENTIAL AND MUST NOT BE MADE PUBLIC OR COPIED UNLESS DULY AUTHORIZED, SHALL NOT BE USED EXCEPT FOR THE PURPOSE FOR WHICH IT WAS SUPPLIED, AND IS SUBJECT TO RETURN ON DEMAND. ALL RIGHTS OF INVENTION OR DESIGN ARE RESERVED.

MAXEY FLATS DISPOSAL SITE
FLEMING COUNTY, KENTUCKY

ALLUVIAL WELL LOCATIONS, DETAIL, AND TABLE (AS-BUILT)

STARTING DATE	JOB NO.	DRAWING NO.	REV
4/02/03	838409	AB-15	0

NOTES:

1. FOR DRAWING INDEX SEE DRAWING AB-2.
2. FOR GENERAL NOTES, LEGEND AND ABBREVIATIONS SEE DRAWING AB-3.
3. PANEL NUMBERS SHOWN ON DRAWING ARE LAYOUT NUMBERS.
4. SEE APPENDIX I OF THE EPA APPROVED REMEDIAL ACTION CONSTRUCTION REPORT FOR GEOMEMBRANE LINER TABLE DETAILING THE LINER PANEL LAYOUT NUMBER, THE FIELD PANEL LAYOUT NUMBER, AND DATE OF INSTALLATION.

SCALE
0 100 200 FEET
GRAPHIC SCALE

SECTION & DETAIL KEY
LETTER OR NUMBER OF SECTION OR DETAIL
DRAWING ON WHICH SECTION OR DETAIL IS TAKEN
DRAWING ON WHICH SECTION OR DETAIL IS SHOWN

SURVEYOR'S CERTIFICATION

I certify that this drawing depicts a topographical survey conducted by me or under my direction. See Civil General Note #2 at Sheet AB-3 for horizontal and vertical origins.

Archey B. Newton — 3674 KY PLS — 6/17/03 Date

STATE OF KENTUCKY — SAMUEL R. MAYER — 12537 — LICENSED PROFESSIONAL ENGINEER
6-17-03
ENGINEER / SURVEYOR SEAL

STATE of KENTUCKY — R.B. NEWTON — 3674 — LICENSED PROFESSIONAL LAND SURVEYOR

NO	DATE	REVISION	AS-BUILT BY	DR BY	CHKD	ENGR	PROJ MGR	APPR
0	06/17/03	AS-BUILT	CS	CS				

Shaw® Shaw Environmental, Inc.

AS-BUILT BY: Glen Stout — DRAWN BY: Glen Stout
CHECKED BY: — DRAFTING CHECK BY:
ENGINEER/SURVEYOR APPROVAL: — PROJECT MANAGER:

CONFIDENTIAL PROPERTY OF SHAW ENVIRONMENTAL, INC.

THIS DRAWING AND ALL INFORMATION THEREON IS CONFIDENTIAL AND MUST NOT BE MADE PUBLIC OR COPIED UNLESS DULY AUTHORIZED, SHALL NOT BE USED EXCEPT FOR THE PURPOSE FOR WHICH IT WAS SUPPLIED, AND IS SUBJECT TO RETURN ON DEMAND. ALL RIGHTS OF INVENTION OR DESIGN ARE RESERVED.

MAXEY FLATS DISPOSAL SITE
FLEMING COUNTY, KENTUCKY

GEOMEMBRANE LINER PANEL LAYOUT (AS-BUILT)

STARTING DATE	JOB NO.	DRAWING NO.	REV
5/19/03	838409	AB-16	0

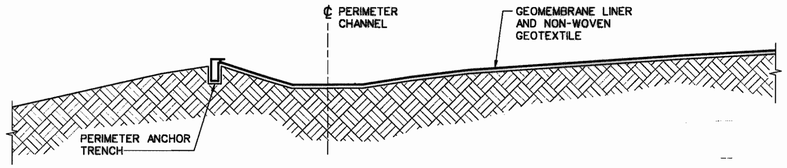

SECTION A
SCALE: 1"=10'-0"
AB-5 AB-17

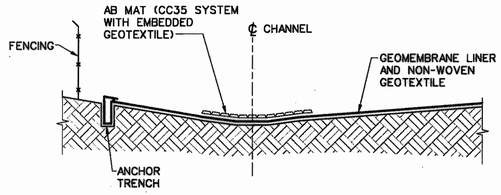

SECTION B
SCALE: 1"=10'-0"
AB-7 AB-17

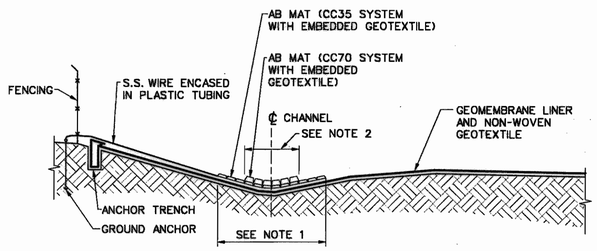

SECTION C
SCALE: 1"=10'-0"
AB-7 AB-17

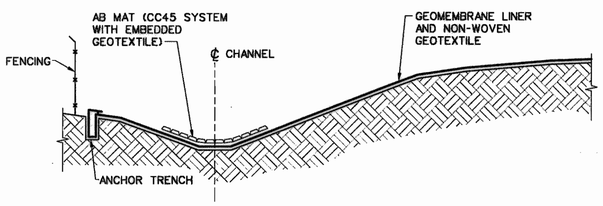

SECTION D
SCALE: 1"=10'-0"
AB-7 AB-17

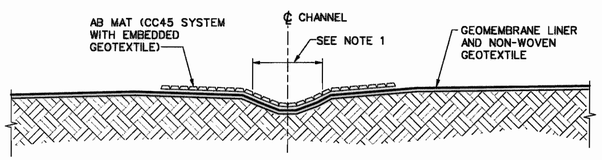

SECTION E
SCALE: 1"=10'-0"
AB-7 AB-17

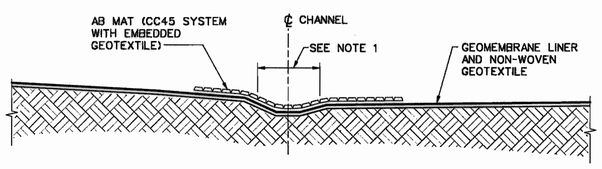

SECTION F
SCALE: 1"=10'-0"
AB-7 AB-17

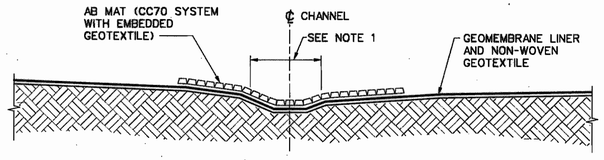

SECTION G
SCALE: 1"=10'-0"
AB-7 AB-17

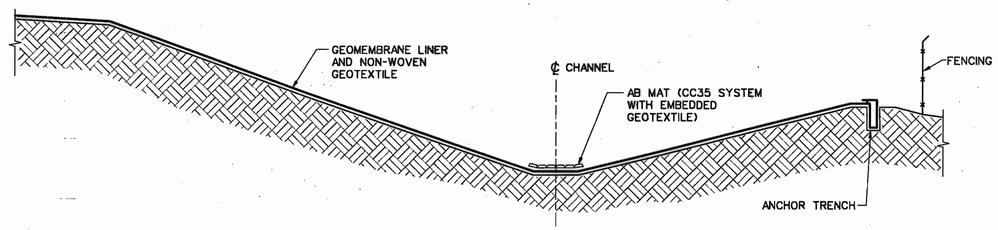

SECTION I
SCALE: 1"=10'-0"
AB-8 AB-17

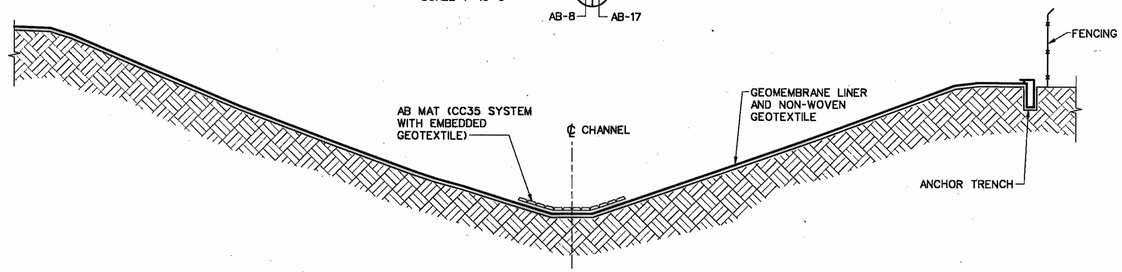

SECTION J
SCALE: 1"=10'-0"
AB-8 AB-17

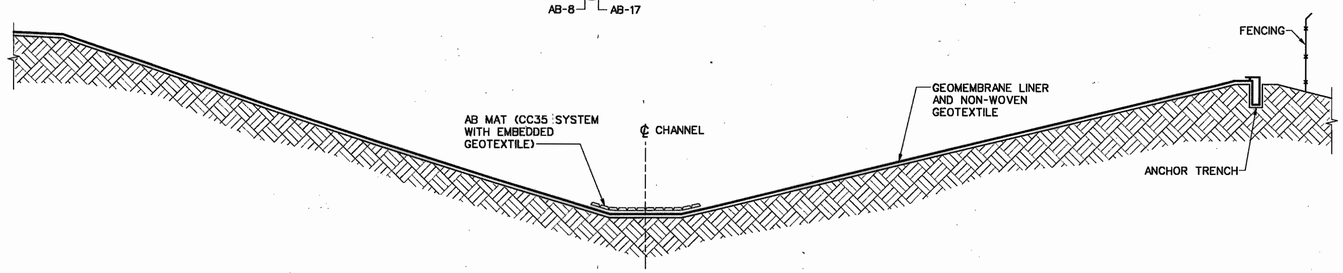

SECTION K
SCALE: 1"=10'-0"
AB-8 AB-17

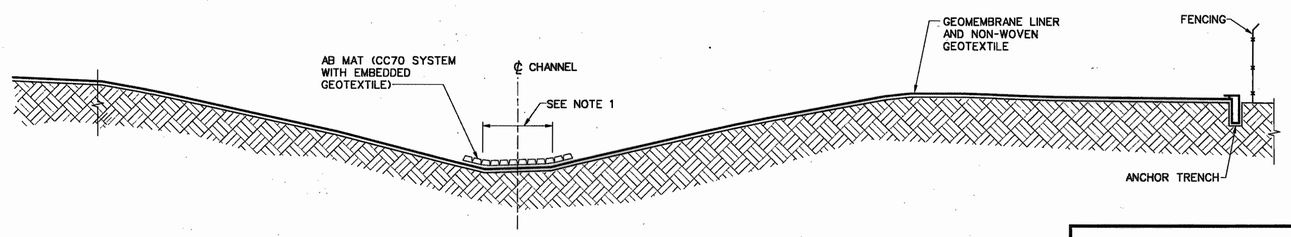

SECTION L
SCALE: 1"=10'-0"
AB-6 AB-17

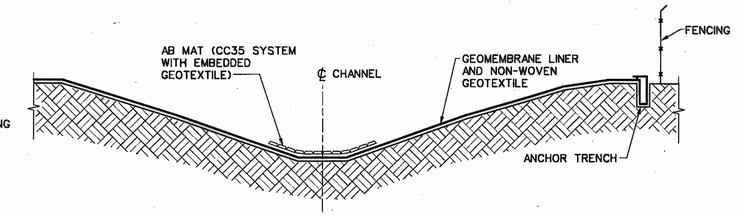

SECTION H
SCALE: 1"=10'-0"
AB-7 AB-17

NOTES:

1. VOID SPACES BETWEEN THE AB MAT BLOCKS WERE GROUTED WITH CEMENTITIOUS FILL MATERIAL.
2. VOID SPACES BETWEEN THE AB MATS WERE GROUTED WITH CEMENTITIOUS FILL MATERIAL.

TYPICAL ARTICULATING CONCRETE BLOCK DIMENSIONS

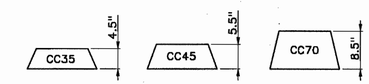

PROFILE

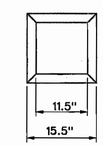

PLAN VIEW

SURVEYOR'S CERTIFICATION

I certify that this drawing depicts details of a topographical survey conducted by me or under my direction. This certification pertains to planimetric and vertical locations only. See Civil General Note #2 at Sheet AB-3 for horizontal and vertical origins.

Richey B. Newton — 3674 KY PLS — 06/17/03 Date

NO	DATE	REVISION	AS-BLT BY	DR BY	CHKD	ENGR	PROJ MGR	APPR
0	06/17/03	AS-BUILT	LS	LS	JW			

Shaw Environmental, Inc.

AS-BUILT BY: Robin Stout
DRAWN BY: Robin Stout
CHECKED BY:
DWG TYD CHECK BY:
ENGINEER/SURVEYOR APPROVAL: Samuel R. Mayes
PROJECT MANAGER: M.M. CARDS

CONFIDENTIAL PROPERTY OF SHAW ENVIRONMENTAL, INC.

THIS DRAWING AND ALL INFORMATION THEREON IS CONFIDENTIAL AND MUST NOT BE MADE PUBLIC OR COPIED UNLESS DULY AUTHORIZED, SHALL NOT BE USED EXCEPT FOR THE PURPOSE FOR WHICH IT WAS SUPPLIED, AND IS SUBJECT TO RETURN ON DEMAND. ALL RIGHTS OF INVENTION OR DESIGN ARE RESERVED.

MAXEY FLATS DISPOSAL SITE
FLEMING COUNTY, KENTUCKY

GEOMEMBRANE LINER AND CHANNEL TREATMENT SECTIONS (AS-BUILT)

STARTING DATE	JOB NO.	DRAWING NO.	REV
04/25/03	838409	AB-17	0

STATE OF KENTUCKY — SAMUEL R. MAYES — 12287 — LICENSED PROFESSIONAL ENGINEER
6-17-03

STATE of KENTUCKY — R.B. NEWTON 3674 — LICENSED PROFESSIONAL LAND SURVEYOR

ENGINEER / SURVEYOR SEAL

SCALE: 1"=10'
0 10 20 FEET
GRAPHIC SCALE

LETTER OR NUMBER OF SECTION OR DETAIL
DRAWING ON WHICH SECTION OR DETAIL IS TAKEN
DRAWING ON WHICH SECTION OR DETAIL IS SHOWN
SECTION & DETAIL KEY

W:\maxey_flats_2\As-Built Drawings\MF-AB16_1-17.dgn 01:02:54 PM 06/16/03 jesters

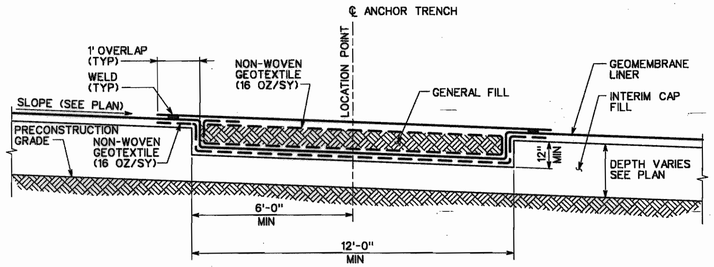

SECTION TYPICAL GEOMEMBRANE INTERIOR ANCHOR TRENCH (A) — AB-5, AB-6, AB-7, AB-8 / AB-18
NOT TO SCALE

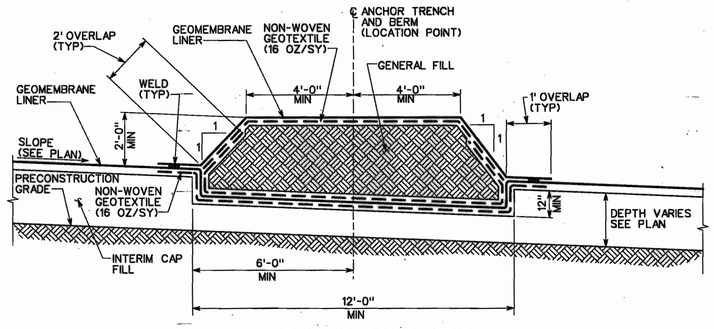

SECTION TYPICAL GEOMEMBRANE INTERIOR ANCHOR TRENCH AND BERM (B) — AB-7 / AB-18
NOT TO SCALE

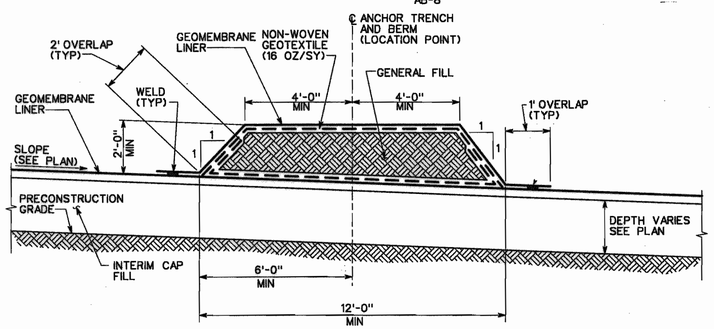

SECTION TYPICAL GEOMEMBRANE INTERIOR BERM (C) — AB-7, AB-8 / AB-18
NOT TO SCALE

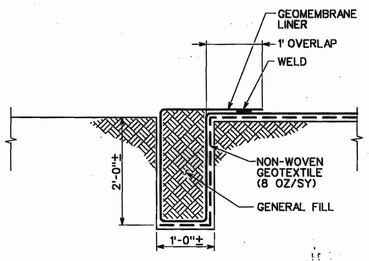

WITH GEOTEXTILE

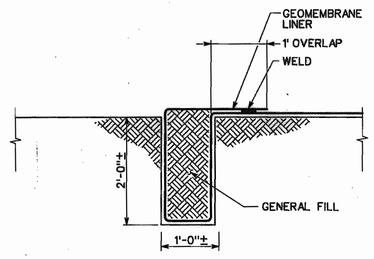

WITHOUT GEOTEXTILE

DETAIL TYPICAL GEOMEMBRANE PERIMETER ANCHOR TRENCH (1) — AB-4, AB-5, AB-6, AB-7, AB-8 / AB-18
NOT TO SCALE

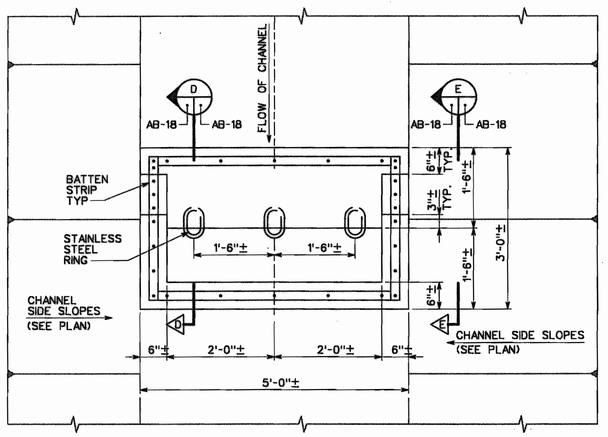

DETAIL TYP. AB MAT CONCRETE DEAD-MAN (2) — AB-7, AB-18 / AB-18
SCALE: NTS

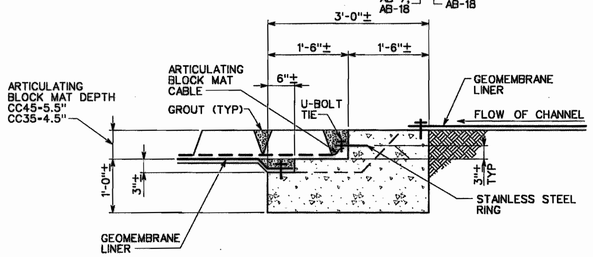

SECTION (D) — AB-18 / AB-18
SCALE: NTS

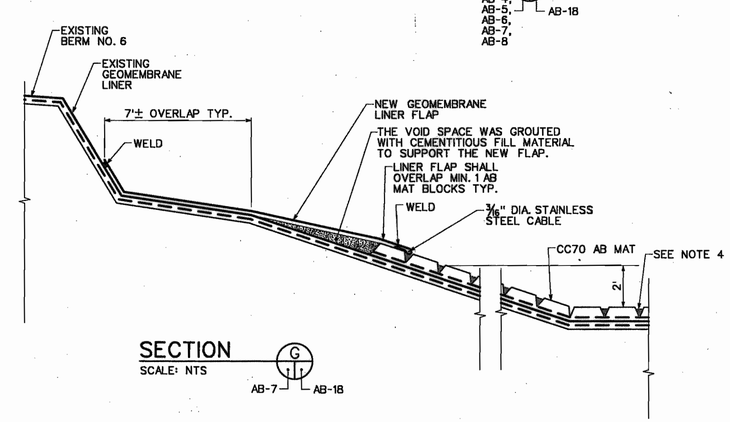

SECTION (G) — AB-7 / AB-18
SCALE: NTS

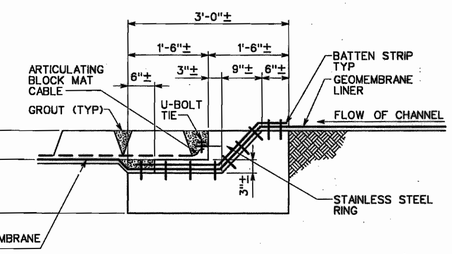

SECTION (E) — AB-18 / AB-18
SCALE: NTS

NOTES:

1. FOR DRAWING INDEX SEE DRAWING AB-2.
2. FOR GENERAL NOTES, LEGEND AND ABBREVIATIONS SEE DRAWING AB-3.
3. VOID SPACE BETWEEN THE AB MAT AND THE DEAD-MAN STRUCTURE, WAS GROUTED WITH CEMENTITIOUS FILL MATERIAL.
4. VOID SPACES BETWEEN THE INDIVIDUAL AB MAT BLOCKS WERE FILLED WITH CEMENTITIOUS FILL MATERIAL TO A DEPTH OF APPROXIMATELY 0.5-INCHES FROM TOP OF THE BLOCK.

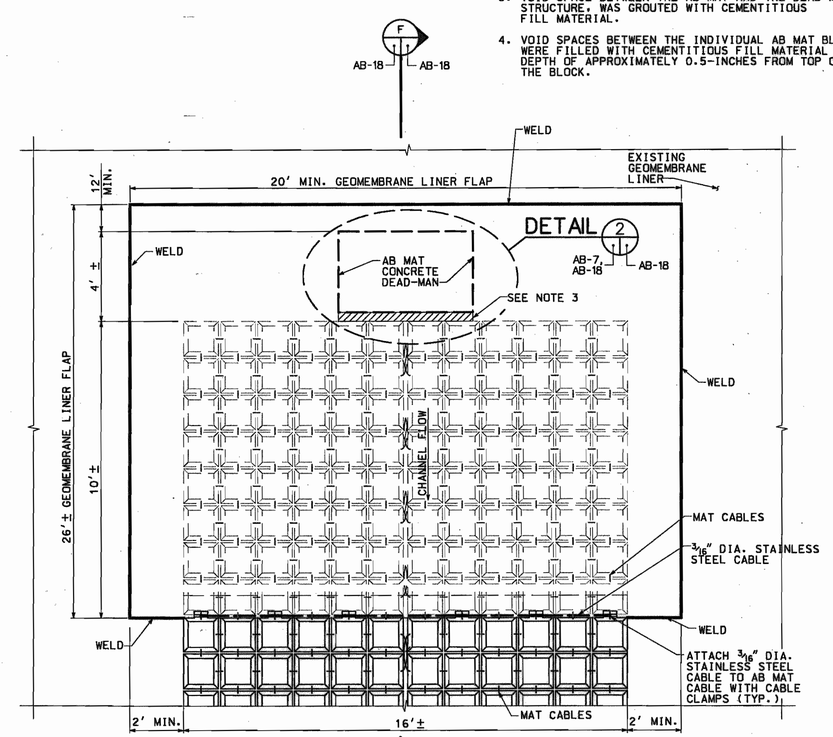

DETAIL Y-CHANNEL AB MAT DEAD-MAN GOEMEMBRANE LINER FLAP (3) — AB-7 / AB-18
SCALE: NTS

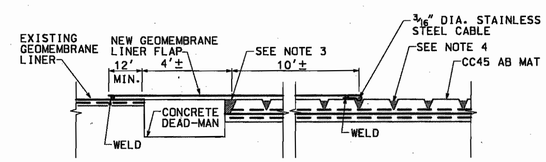

SECTION (F) — AB-18 / AB-18
SCALE: NTS

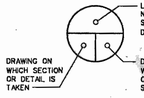

SECTION & DETAIL KEY

STATE OF KENTUCKY — SAMUEL R. MAYES — LICENSED PROFESSIONAL ENGINEER
6-17-03
ENGINEER / SURVEYOR SEAL

NO	DATE	REVISION	AS-BUILT BY	DR BY	CHKD	ENGR	PROJ MGR	APPR
0	06/17/03	AS-BUILT	CS	CS	TW			

Shaw Environmental, Inc.
AS-BUILT BY: Chris Stout — DRAWN BY: Chris Stout
CHECKED BY: — DRAFTING CHECK BY:
ENGINEER/SURVEYOR APPROVAL: Samuel R. Mayes — PROJECT MANAGER: Terrance W. Capps

CONFIDENTIAL PROPERTY OF SHAW ENVIRONMENTAL, INC.

THIS DRAWING AND ALL INFORMATION THEREON IS CONFIDENTIAL AND MUST NOT BE MADE PUBLIC OR COPIED UNLESS DULY AUTHORIZED, SHALL NOT BE USED EXCEPT FOR THE PURPOSE FOR WHICH IT WAS SUPPLIED, AND IS SUBJECT TO RETURN ON DEMAND. ALL RIGHTS OF INVENTION OR DESIGN ARE RESERVED.

MAXEY FLATS DISPOSAL SITE
FLEMING COUNTY, KENTUCKY

GEOMEMBRANE LINER AND CHANNEL TREATMENT SECTIONS AND DETAILS (AS-BUILT)

STARTING DATE	JOB NO.	DRAWING NO.	REV
04/28/03	838409	AB-18	0

M:\maxey_flats_2\As-Built Drawings\AF-ASBL1-18.dgn 06/18/03 02:37:47 PM jestera

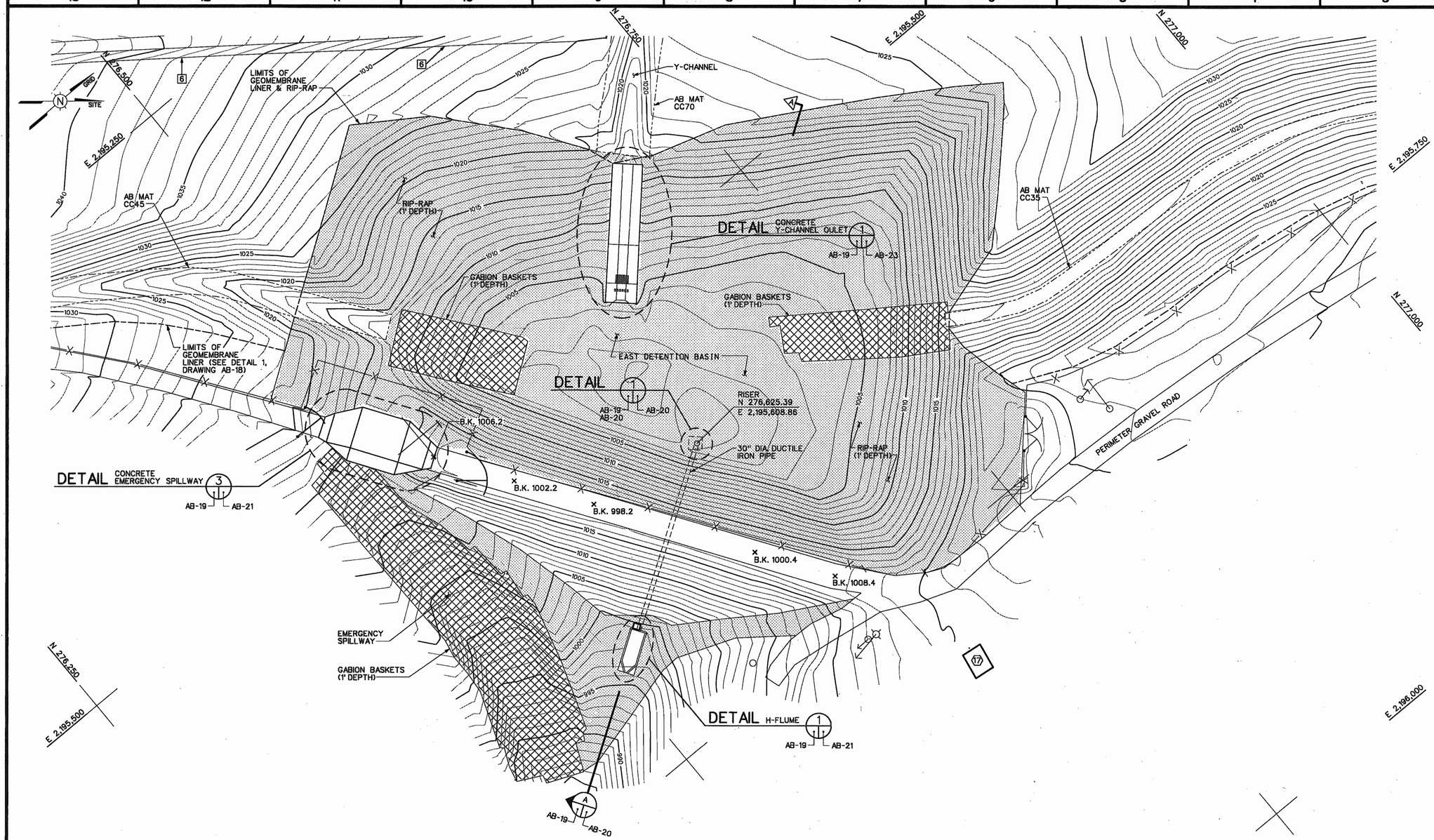

NOTES:

1. FOR DRAWING INDEX SEE DRAWING AB-2.
2. FOR GENERAL NOTES, LEGEND AND ABBREVIATIONS SEE DRAWING AB-3.

SPOT ELEVATION KEY:

× B.K. 1008.4 — BOTTOM OF BASIN EMBANKMENT KEYWAY ELEVATION

SURVEYOR'S CERTIFICATION

I certify that this drawing depicts a topographical survey conducted by me or under my direction. See Civil General Note #2 at Sheet AB-3 for horizontal and vertical origins.

Rodney B. Newton — 3674 KY PLS — 6/17/03 Date

NO	DATE	REVISION	ASBLT BY	DR BY	CHKD	ENGR	PROJ MGR	APPR
D	06/17/03	AS-BUILT	JW	JW	LS			

Shaw Shaw Environmental, Inc.

AS-BUILT BY: JW — DRAWN BY: JW
CHECKED BY: — DRAFTING CHECK BY: Dev. Street
ENGINEER/SURVEYOR APPROVAL: Samuel R. Mayes — PROJECT MANAGER: Michael Rapps

CONFIDENTIAL PROPERTY OF SHAW ENVIRONMENTAL, INC.

THIS DRAWING AND ALL INFORMATION THEREON IS CONFIDENTIAL AND MUST NOT BE MADE PUBLIC OR COPIED UNLESS DULY AUTHORIZED, SHALL NOT BE USED EXCEPT FOR THE PURPOSE FOR WHICH IT WAS SUPPLIED, AND IS SUBJECT TO RETURN ON DEMAND. ALL RIGHTS OF INVENTION OR DESIGN ARE RESERVED.

SCALE: 0 30 60 FEET — GRAPHIC SCALE

LETTER OR NUMBER OF SECTION OR DETAIL — DRAWING ON WHICH SECTION OR DETAIL IS TAKEN — DRAWING ON WHICH SECTION OR DETAIL IS SHOWN — SECTION & DETAIL KEY

STATE OF KENTUCKY SAMUEL R. MAYES 3697 LICENSED PROFESSIONAL ENGINEER — 6-17-03

STATE of KENTUCKY R.B. NEWTON 3674 LICENSED PROFESSIONAL LAND SURVEYOR

ENGINEER / SURVEYOR SEAL

MAXEY FLATS DISPOSAL SITE
FLEMING COUNTY, KENTUCKY

EAST DETENION BASIN TOPO (AS-BUILT)

STARTING DATE	JOB NO.	DRAWING NO.	REV
4/18/03	838409	AB-19	0

U:\Maxey Flats 2\As-Built Drawings\AF-ASBL1-19.dgn 02/24/03 PM 06/16/03 lwilliams

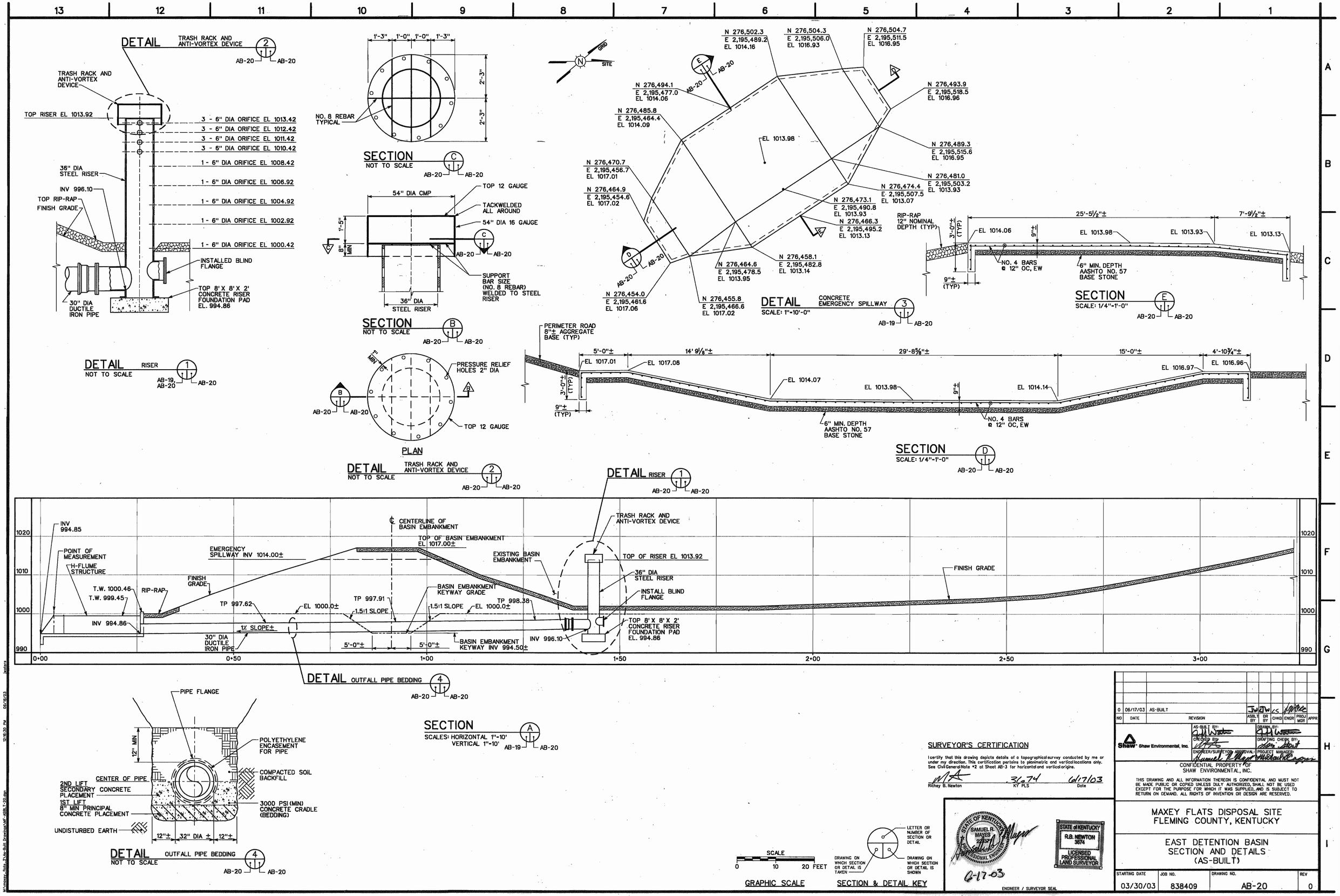
DETAIL TRASH RACK AND ANTI-VORTEX DEVICE
TRASH RACK AND ANTI-VORTEX DEVICE
TOP RISER EL 1013.92
3 - 6" DIA ORIFICE EL 1013.42
3 - 6" DIA ORIFICE EL 1012.42
3 - 6" DIA ORIFICE EL 1011.42
3 - 6" DIA ORIFICE EL 1010.42
1 - 6" DIA ORIFICE EL 1008.42
1 - 6" DIA ORIFICE EL 1006.92
1 - 6" DIA ORIFICE EL 1004.92
1 - 6" DIA ORIFICE EL 1002.92
1 - 6" DIA ORIFICE EL 1000.42
36" DIA STEEL RISER
INV 996.10
TOP RIP-RAP
FINISH GRADE
INSTALLED BLIND FLANGE
TOP 8' X 8' X 2' CONCRETE RISER FOUNDATION PAD EL. 994.86
30" DIA DUCTILE IRON PIPE
DETAIL RISER NOT TO SCALE
NO. 8 REBAR TYPICAL
SECTION NOT TO SCALE
54" DIA CMP
TOP 12 GAUGE
TACKWELDED ALL AROUND
54" DIA 16 GAUGE
SUPPORT BAR SIZE (NO. 8 REBAR) WELDED TO STEEL RISER
36" DIA STEEL RISER
SECTION NOT TO SCALE
PRESSURE RELIEF HOLES 2" DIA
TOP 12 GAUGE
PLAN
DETAIL TRASH RACK AND ANTI-VORTEX DEVICE NOT TO SCALE
GRID
SITE
N 276,502.3 E 2,195,489.2 EL 1014.16
N 276,504.3 E 2,195,506.0 EL 1016.93
N 276,504.7 E 2,195,511.5 EL 1016.95
N 276,494.1 E 2,195,477.0 EL 1014.06
N 276,493.9 E 2,195,518.5 EL 1016.96
N 276,485.8 E 2,195,464.4 EL 1014.09
EL 1013.98
N 276,489.3 E 2,195,515.6 EL 1016.95
N 276,470.7 E 2,195,456.7 EL 1017.01
N 276,481.0 E 2,195,503.2 EL 1013.93
N 276,464.9 E 2,195,454.6 EL 1017.02
N 276,474.4 E 2,195,507.5 EL 1013.07
N 276,473.1 E 2,195,490.8 EL 1013.93
N 276,466.3 E 2,195,495.2 EL 1013.13
N 276,464.6 E 2,195,478.5 EL 1013.95
N 276,458.1 E 2,195,482.8 EL 1013.14
N 276,454.0 E 2,195,461.6 EL 1017.06
N 276,455.8 E 2,195,466.6 EL 1017.02
DETAIL CONCRETE EMERGENCY SPILLWAY SCALE: 1"=10'-0"
RIP-RAP 12" NOMINAL DEPTH (TYP)
25'-5½"± 7'-9½"±
EL 1014.06 EL 1013.98 EL 1013.93 EL 1013.13
NO. 4 BARS @ 12" OC, EW
6" MIN. DEPTH AASHTO NO. 57 BASE STONE
SECTION SCALE: 1/4"=1'-0"
PERIMETER ROAD 8"± AGGREGATE BASE (TYP)
5'-0"± 14' 9⅛"± 29'-8⅝"± 15'-0"± 4'-10¾"±
EL 1017.01 EL 1017.06 EL 1014.07 EL 1013.98 EL 1014.14 EL 1016.97 EL 1016.96
6" MIN. DEPTH AASHTO NO. 57 BASE STONE
NO. 4 BARS @ 12" OC, EW
SECTION SCALE: 1/4"=1'-0"
INV 994.85
POINT OF MEASUREMENT
H-FLUME STRUCTURE
T.W. 1000.46
T.W. 999.45
RIP-RAP
FINISH GRADE
EMERGENCY SPILLWAY INV 1014.00±
℄ CENTERLINE OF BASIN EMBANKMENT
TOP OF BASIN EMBANKMENT EL 1017.00±
EXISTING BASIN EMBANKMENT
TRASH RACK AND ANTI-VORTEX DEVICE
TOP OF RISER EL 1013.92
36" DIA STEEL RISER
INSTALL BLIND FLANGE
FINISH GRADE
BASIN EMBANKMENT KEYWAY GRADE
TP 997.62
TP 997.91
TP 998.38
EL 1000.0±
1.5:1 SLOPE
1.5:1 SLOPE
EL 1000.0±
INV 994.86
1% SLOPE±
30" DIA DUCTILE IRON PIPE
5'-0"± 5'-0"±
BASIN EMBANKMENT KEYWAY INV 994.50±
INV 996.10
TOP 8' X 8' X 2' CONCRETE RISER FOUNDATION PAD EL. 994.86
1020 1010 1000 990
0+00 0+50 1+00 1+50 2+00 2+50 3+00
DETAIL OUTFALL PIPE BEDDING
PIPE FLANGE
12" MIN
POLYETHYLENE ENCASEMENT FOR PIPE
COMPACTED SOIL BACKFILL
CENTER OF PIPE
2ND LIFT SECONDARY CONCRETE PLACEMENT
1ST LIFT 8" MIN PRINCIPAL CONCRETE PLACEMENT
3000 PSI (MIN) CONCRETE CRADLE (BEDDING)
UNDISTURBED EARTH
12"± 32" DIA ± 12"±
DETAIL OUTFALL PIPE BEDDING NOT TO SCALE
SECTION SCALES: HORIZONTAL 1"=10' VERTICAL 1"=10'
SURVEYOR'S CERTIFICATION
I certify that this drawing depicts details of a topographical survey conducted by me or under my direction. This certification pertains to planimetric and vertical locations only. See Civil General Note #2 at Sheet AB-3 for horizontal and vertical origins.
Richey B. Newton
3674 KY PLS
6/17/03 Date
STATE OF KENTUCKY SAMUEL R. MAYES 3674 LICENSED PROFESSIONAL ENGINEER
6-17-03
STATE of KENTUCKY R.B. NEWTON 3674 LICENSED PROFESSIONAL LAND SURVEYOR
ENGINEER / SURVEYOR SEAL
SCALE 0 10 20 FEET
GRAPHIC SCALE
LETTER OR NUMBER OF SECTION OR DETAIL
DRAWING ON WHICH SECTION OR DETAIL IS TAKEN
DRAWING ON WHICH SECTION OR DETAIL IS SHOWN
SECTION & DETAIL KEY
0 06/17/03 AS-BUILT
NO DATE REVISION ASBLT BY DR BY CHKD ENGR PROJ MGR APPR
Shaw Shaw Environmental, Inc.
AS-BUILT BY: CHECKED BY: ENGINEER/SURVEYOR APPROVAL:
DRAWN BY: DRAFTING CHECK BY: PROJECT MANAGER:
CONFIDENTIAL PROPERTY OF SHAW ENVIRONMENTAL, INC.
THIS DRAWING AND ALL INFORMATION THEREON IS CONFIDENTIAL AND MUST NOT BE MADE PUBLIC OR COPIED UNLESS DULY AUTHORIZED, SHALL NOT BE USED EXCEPT FOR THE PURPOSE FOR WHICH IT WAS SUPPLIED, AND IS SUBJECT TO RETURN ON DEMAND. ALL RIGHTS OF INVENTION OR DESIGN ARE RESERVED.
MAXEY FLATS DISPOSAL SITE
FLEMING COUNTY, KENTUCKY
EAST DETENTION BASIN SECTION AND DETAILS (AS-BUILT)
STARTING DATE 03/30/03
JOB NO. 838409
DRAWING NO. AB-20
REV 0

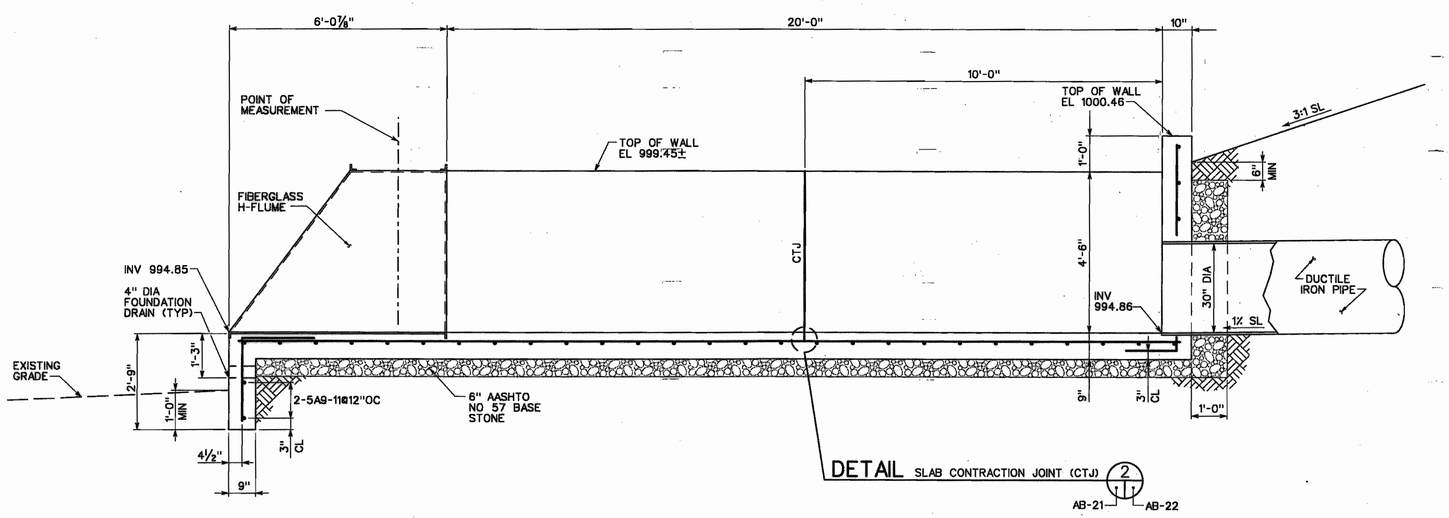

SECTION A
SCALE: NTS
AB-21 AB-21

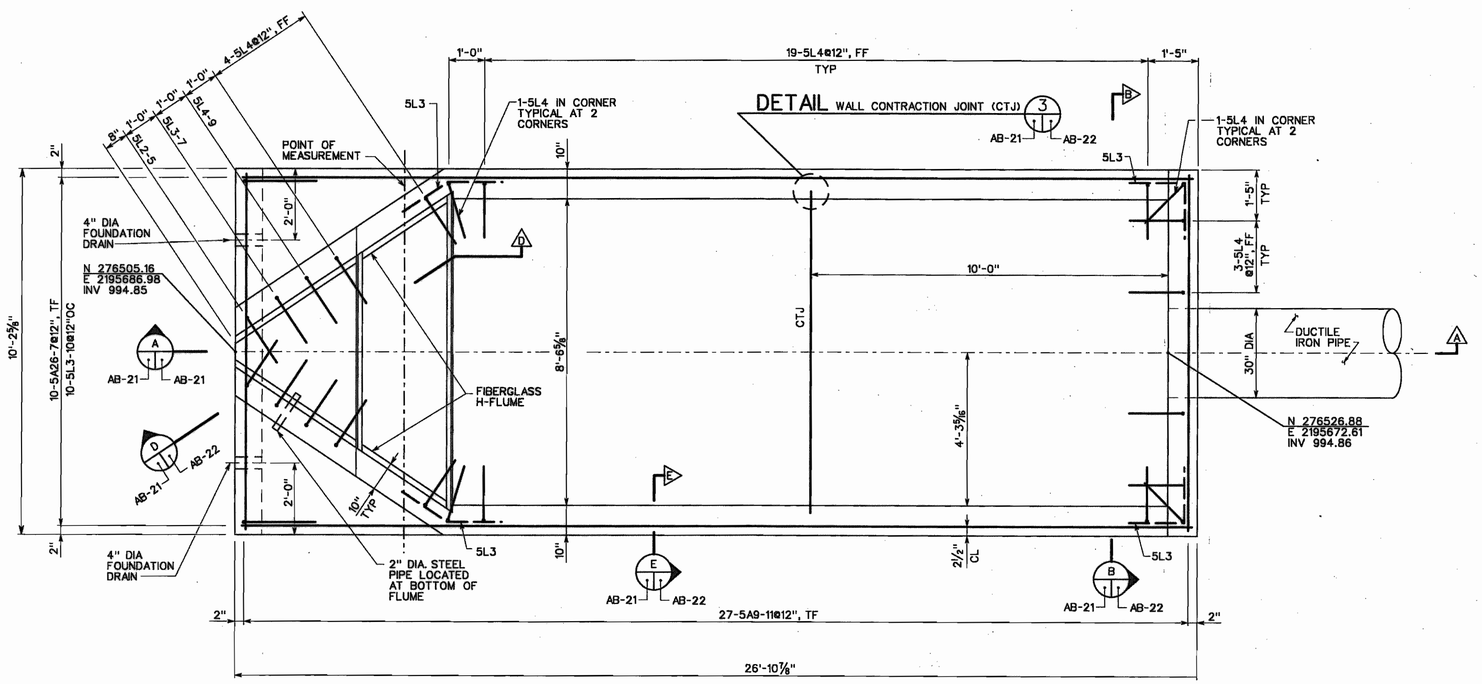

DETAIL H-FLUME STRUCTURE 1
SCALE: NTS
AB-19 AB-21

NOTES:

1. TYPICAL BAR DESIGNATION:
   10-4A20-9
   - BAR LENGTH
   - BAR TYPE:
     - A = STRAIGHT BAR
     - L = BENT BAR
   - BAR SIZE
   - NUMBER OF BARS REQUIRED

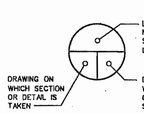

SECTION & DETAIL KEY

STATE OF KENTUCKY SAMUEL R. MAXEY 6-17-03 LICENSED PROFESSIONAL ENGINEER

STATE OF KENTUCKY R.B. NEWTON 3674 LICENSED PROFESSIONAL LAND SURVEYOR

ENGINEER / SURVEYOR SEAL

SURVEYOR'S CERTIFICATION

I certify that this drawing depicts details of a topographical survey conducted by me or under my direction. This certification pertains to planimetric and vertical locations only. See Civil General Note #2 at Sheet AB-3 for horizontal and vertical origins.

Richey B. Newton — 3674 KY PLS — 6/17/03 Date

NO	DATE	REVISION	ASBLT BY	DR BY	CHKD	ENGR	PROJ MGR	APPR
0	08/17/03	AS-BUILT	JW	JW	LS			

Shaw® Shaw Environmental, Inc.

AS-BUILT BY: J.H. Watts — DRAWING BY: J.H. Watts
CHECKED BY: — DRAFTING CHECK BY: Sara Stout
ENGINEER/SURVEYOR APPROVAL: Samuel R. Maxey — PROJECT MANAGER: Michael Rippon

CONFIDENTIAL PROPERTY OF SHAW ENVIRONMENTAL, INC.

THIS DRAWING AND ALL INFORMATION THEREON IS CONFIDENTIAL AND MUST NOT BE MADE PUBLIC OR COPIED UNLESS DULY AUTHORIZED, SHALL NOT BE USED EXCEPT FOR THE PURPOSE FOR WHICH IT WAS SUPPLIED, AND IS SUBJECT TO RETURN ON DEMAND. ALL RIGHTS OF INVENTION OR DESIGN ARE RESERVED.

MAXEY FLATS DISPOSAL SITE
FLEMING COUNTY, KENTUCKY

EAST DETENTION BASIN
H-FLUME SECTION AND DETAIL
(AS-BUILT)

STARTING DATE	JOB NO.	DRAWING NO.	REV
4/1/03	838409	AB-21	0

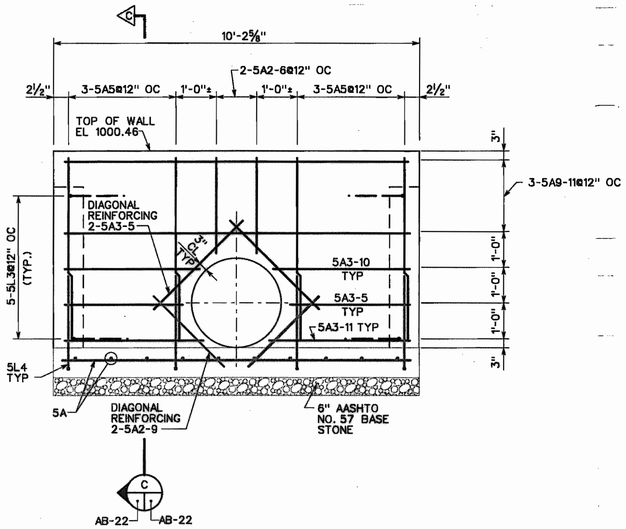

SECTION
SCALE: NTS
B
AB-21 AB-22

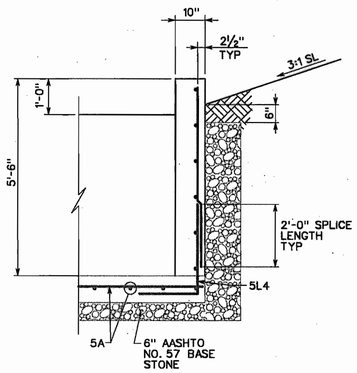

SECTION
SCALE: NTS
C
AB-22 AB-22

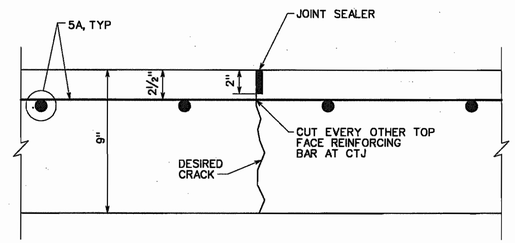

DETAIL SLAB CONTRACTION JOINT (CTJ)
SCALE: NTS
2
AB-21 AB-21

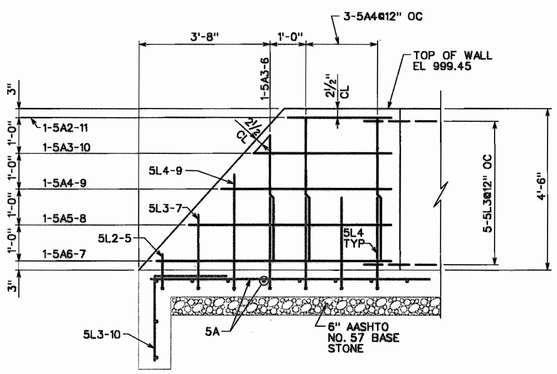

SECTION
SCALE: NTS
D
AB-21 AB-22

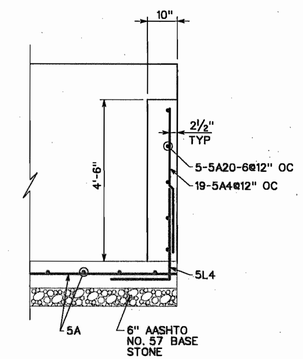

SECTION
SCALE: NTS
E
AB-21 AB-22

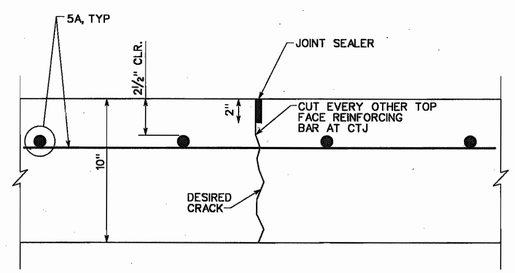

DETAIL WALL CONTRACTION JOINT (CTJ)
SCALE: NTS
3
AB-21 AB-22

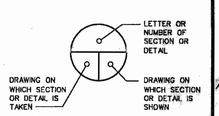

SECTION & DETAIL KEY

STATE OF KENTUCKY
SAMUEL R. MAYES
LICENSED
PROFESSIONAL ENGINEER
6-17-03

ENGINEER / SURVEYOR SEAL

NO	DATE	REVISION	ASBLT BY	DR BY	CHKD	ENGR	PROJ MGR	APPR
0	06/17/03	AS-BUILT	JWJW					

Shaw Shaw Environmental, Inc.

AS-BUILT BY: JWJW
DRAWN BY:
CHECKED BY:
DRAFTING CHECK BY:
ENGINEER/SURVEYOR APPROVAL:
PROJECT MANAGER:

CONFIDENTIAL PROPERTY OF
SHAW ENVIRONMENTAL, INC.

THIS DRAWING AND ALL INFORMATION THEREON IS CONFIDENTIAL AND MUST NOT BE MADE PUBLIC OR COPIED UNLESS DULY AUTHORIZED, SHALL NOT BE USED EXCEPT FOR THE PURPOSE FOR WHICH IT WAS SUPPLIED, AND IS SUBJECT TO RETURN ON DEMAND. ALL RIGHTS OF INVENTION OR DESIGN ARE RESERVED.

MAXEY FLATS DISPOSAL SITE
FLEMING COUNTY, KENTUCKY

EAST DETENTION BASIN
H-FLUME SECTIONS AND DETAILS
(AS-BUILT)

STARTING DATE	JOB NO.	DRAWING NO.	REV
4/01/03	838409	AB-22	0

NOTES:

1. VOID SPACES BETWEEN THE INDIVIDUAL AB MAT BLOCKS WERE FILLED WITH CEMENTITIOUS FILL MATERIAL TO A DEPTH OF APPROXIMATELY 0.5-INCHES FROM TOP OF THE BLOCK.

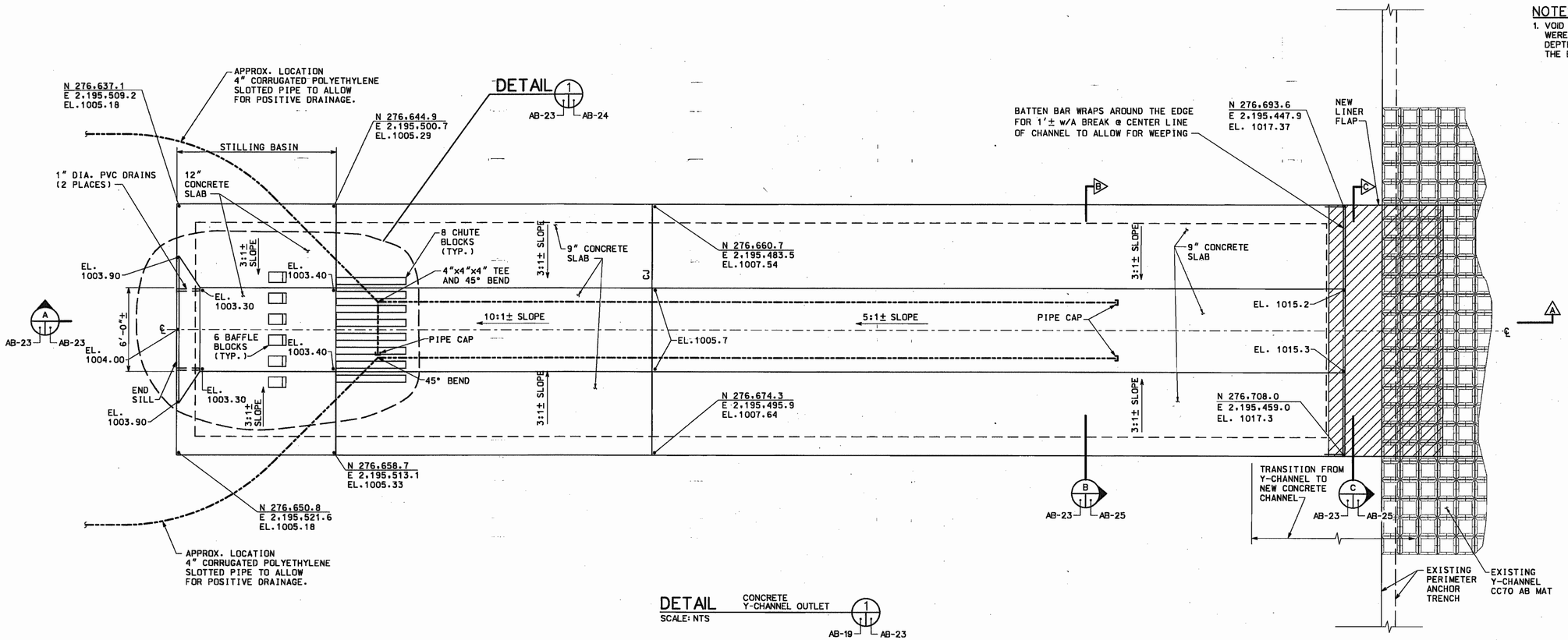

DETAIL 1 — CONCRETE Y-CHANNEL OUTLET
SCALE: NTS
AB-19 AB-23

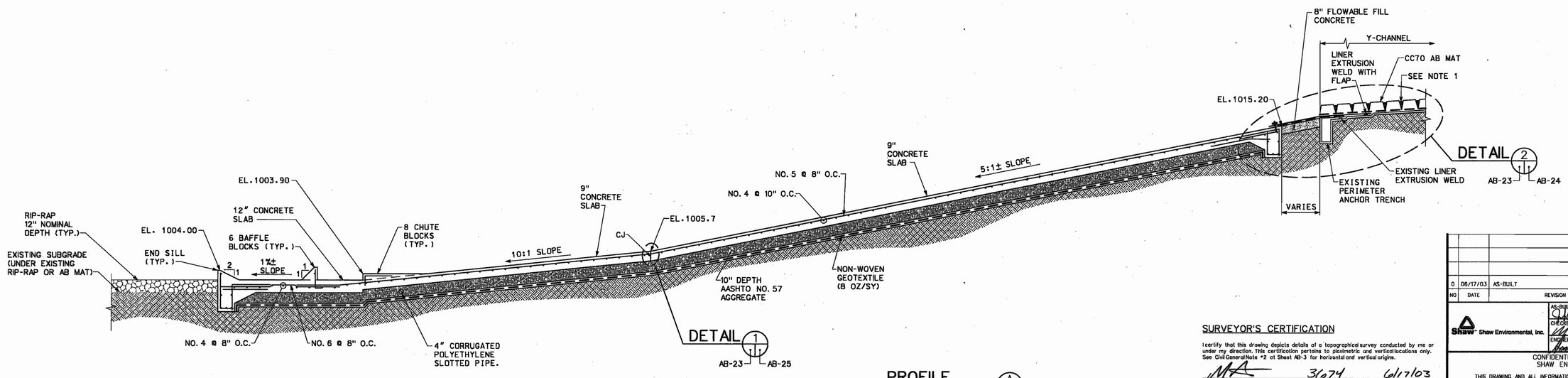

PROFILE
NOT TO SCALE
AB-23 AB-23

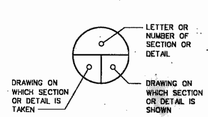

SECTION & DETAIL KEY

SURVEYOR'S CERTIFICATION

I certify that this drawing depicts details of a topographical survey conducted by me or under my direction. This certification pertains to planimetric and vertical locations only. See Civil General Note #2 at Sheet AB-3 for horizontal and vertical origins.

Rickey B. Newton — 3674 KY PLS — 6/17/03 Date

STATE OF KENTUCKY — SAMUEL R. MAYES — LICENSED PROFESSIONAL ENGINEER
6-17-03
ENGINEER / SURVEYOR SEAL

STATE of KENTUCKY — R.B. NEWTON 3674 — LICENSED PROFESSIONAL LAND SURVEYOR

NO	DATE	REVISION	ASBLT BY	DR BY	CHKD	ENGR	PROJ MGR	APPR
0	06/17/03	AS-BUILT	JW	JW	LS			

Shaw Shaw Environmental, Inc.
AS-BUILT BY: JW Watts
CHECKED BY:
ENGINEER/SURVEYOR APPROVAL:
DRAWN BY: JW Watts
DRAFTING CHECK BY:
PROJECT MANAGER:

CONFIDENTIAL PROPERTY OF SHAW ENVIRONMENTAL, INC.

THIS DRAWING AND ALL INFORMATION THEREON IS CONFIDENTIAL AND MUST NOT BE MADE PUBLIC OR COPIED UNLESS DULY AUTHORIZED, SHALL NOT BE USED EXCEPT FOR THE PURPOSE FOR WHICH IT WAS SUPPLIED, AND IS SUBJECT TO RETURN ON DEMAND. ALL RIGHTS OF INVENTION OR DESIGN ARE RESERVED.

MAXEY FLATS DISPOSAL SITE
FLEMING COUNTY, KENTUCKY

EDB Y-CHANNEL OUTLET DETAIL AND PROFILE (AS-BUILT)

STARTING DATE	JOB NO.	DRAWING NO.	REV
4/01/03	838409	AB-23	0

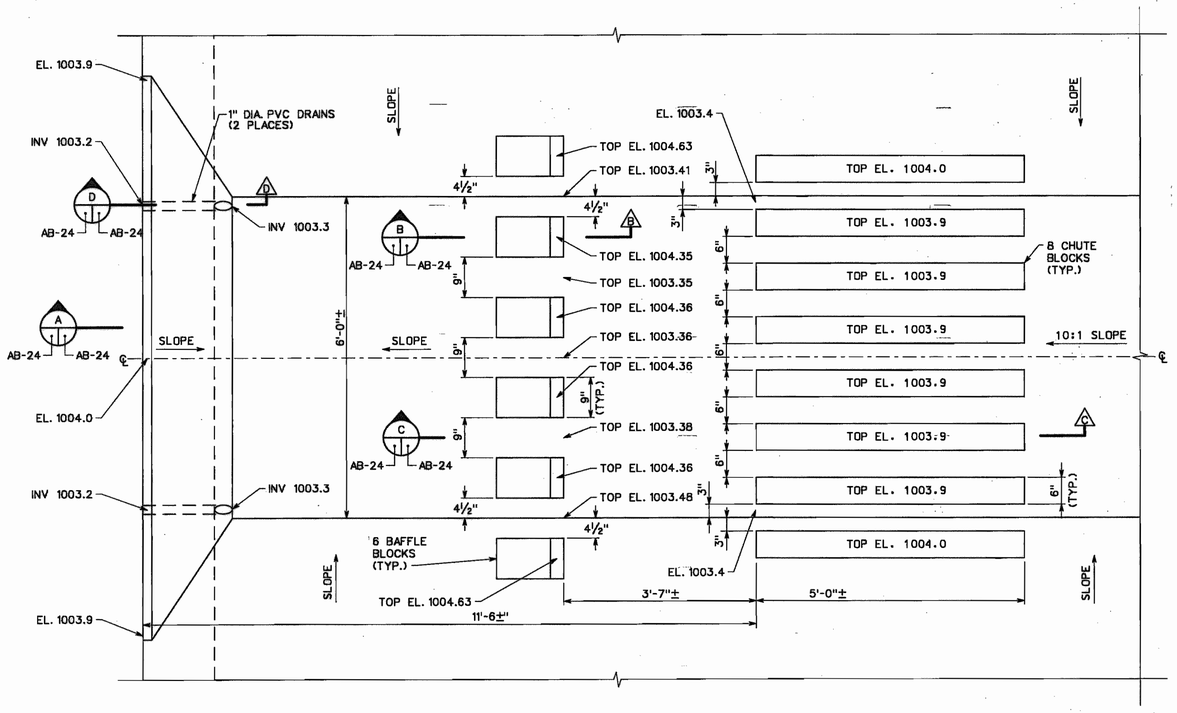

DETAIL STILLING BASIN (1)
NOT TO SCALE
AB-23 — AB-24

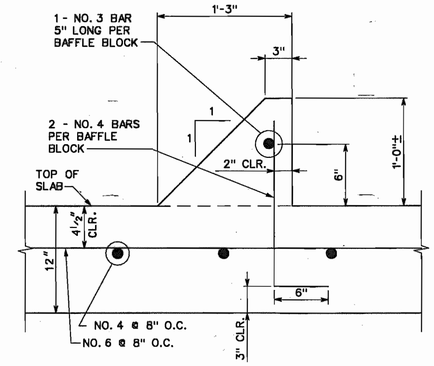

SECTION BAFFLE BLOCK (B)
NOT TO SCALE
AB-24 — AB-24

NOTES:
1. VOID SPACES BETWEEN THE INDIVIDUAL AB MAT BLOCKS WERE FILLED WITH CEMENTITIOUS FILL MATERIAL TO A DEPTH OF APPROXIMATELY 0.5-INCHES FROM TOP OF THE BLOCK.

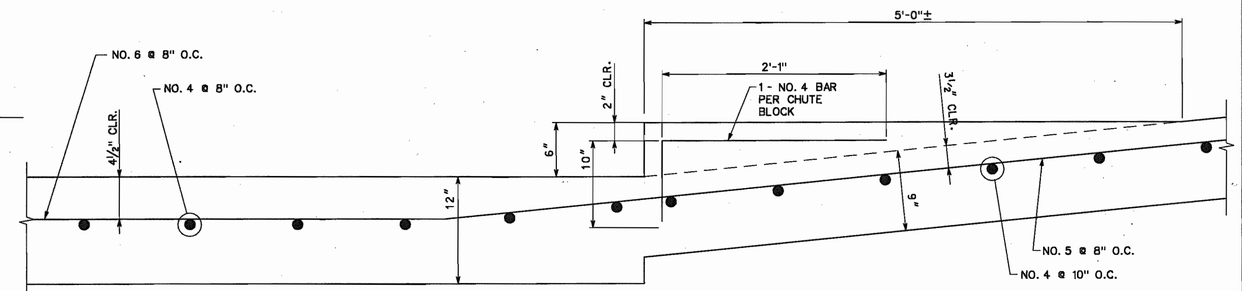

SECTION CHUTE BLOCK (C)
NOT TO SCALE
AB-24 — AB-24

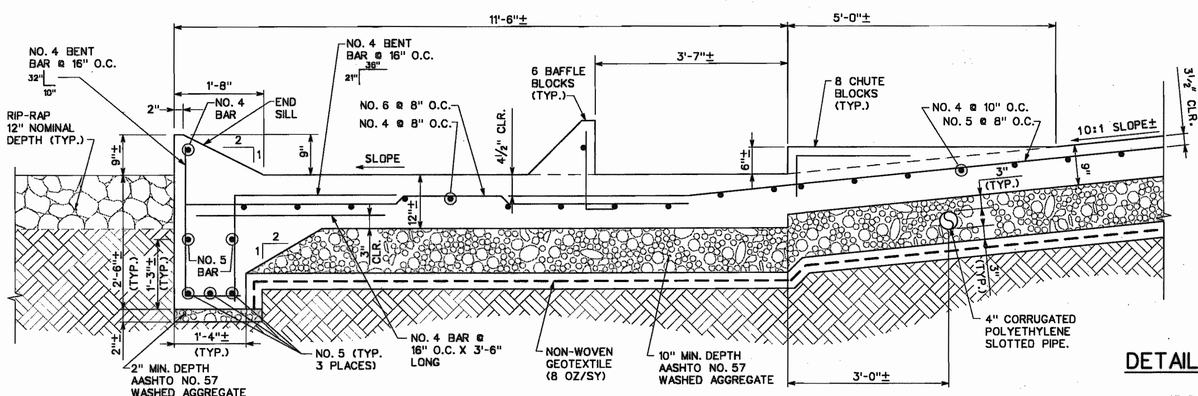

SECTION STILLING BASIN (A)
NOT TO SCALE
AB-24 — AB-24

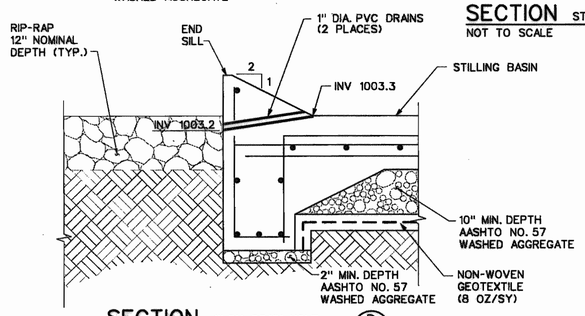

SECTION 1" DIA. DRAIN HOLE (D)
NOT TO SCALE
AB-24 — AB-24

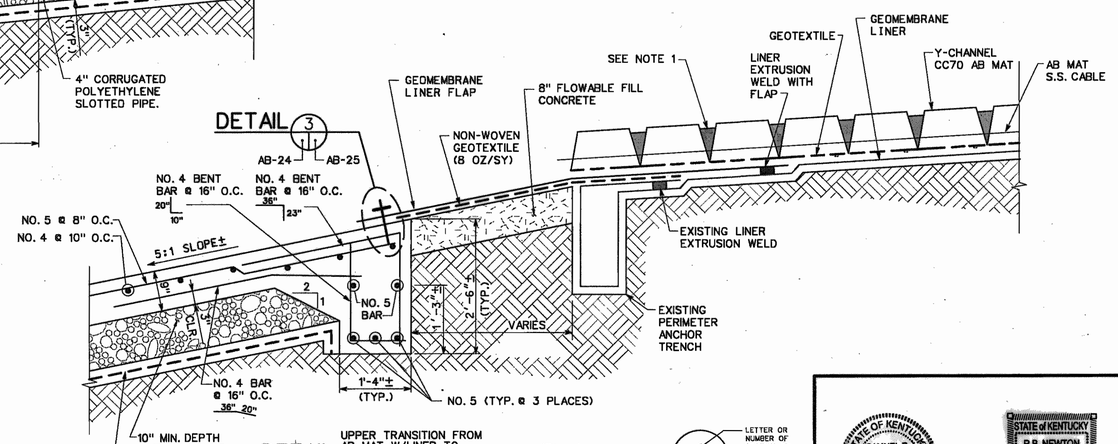

DETAIL UPPER TRANSITION FROM AB MAT W/LINER TO REINFORCED CONCRETE CHANNEL (2)
NOT TO SCALE
AB-23 — AB-24

DETAIL (3)
AB-24 — AB-25

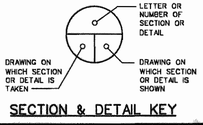

SECTION & DETAIL KEY

SURVEYOR'S CERTIFICATION

I certify that this drawing depicts details of a topographical survey conducted by me or under my direction. This certification pertains to planimetric and vertical locations only. See Civil General Note #2 at Sheet AB-3 for horizontal and vertical origins.

Richey B. Newton — 3674 KY PLS — 6/17/03 Date

NO	DATE	REVISION	ASBLT BY	DR BY	CHKD	ENGR	PROJ MGR	APPR
0	06/17/03	AS-BUILT	JW	JW	J.S.			

Shaw Environmental, Inc.

AS-BUILT BY: JW Watts — DRAWN BY: JW Watts
CHECKED BY: — DRAFTING CHECK BY:
ENGINEER/SURVEYOR APPROVAL: — PROJECT MANAGER:

CONFIDENTIAL PROPERTY OF SHAW ENVIRONMENTAL, INC.

THIS DRAWING AND ALL INFORMATION THEREON IS CONFIDENTIAL AND MUST NOT BE MADE PUBLIC OR COPIED UNLESS DULY AUTHORIZED, SHALL NOT BE USED EXCEPT FOR THE PURPOSE FOR WHICH IT WAS SUPPLIED, AND IS SUBJECT TO RETURN ON DEMAND. ALL RIGHTS OF INVENTION OR DESIGN ARE RESERVED.

STATE OF KENTUCKY — SAMUEL R. MAXEY — LICENSED PROFESSIONAL ENGINEER
6-17-03
ENGINEER / SURVEYOR SEAL

STATE of KENTUCKY — R.B. NEWTON 3674 — LICENSED PROFESSIONAL LAND SURVEYOR

MAXEY FLATS DISPOSAL SITE
FLEMING COUNTY, KENTUCKY

EDB Y-CHANNEL OUTLET SECTIONS AND DETAILS (AS-BUILT)

STARTING DATE	JOB NO.	DRAWING NO.	REV
4/01/03	838409	AB-24	0

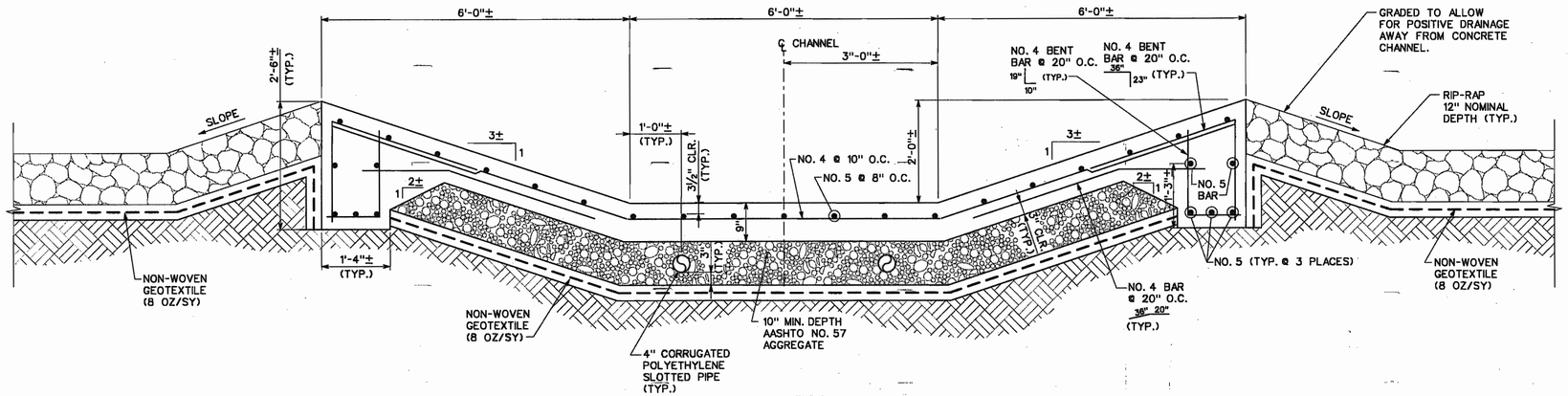

SECTION TYPICAL CONCRETE CHANNEL (B) — AB-23 / AB-25
NOT TO SCALE

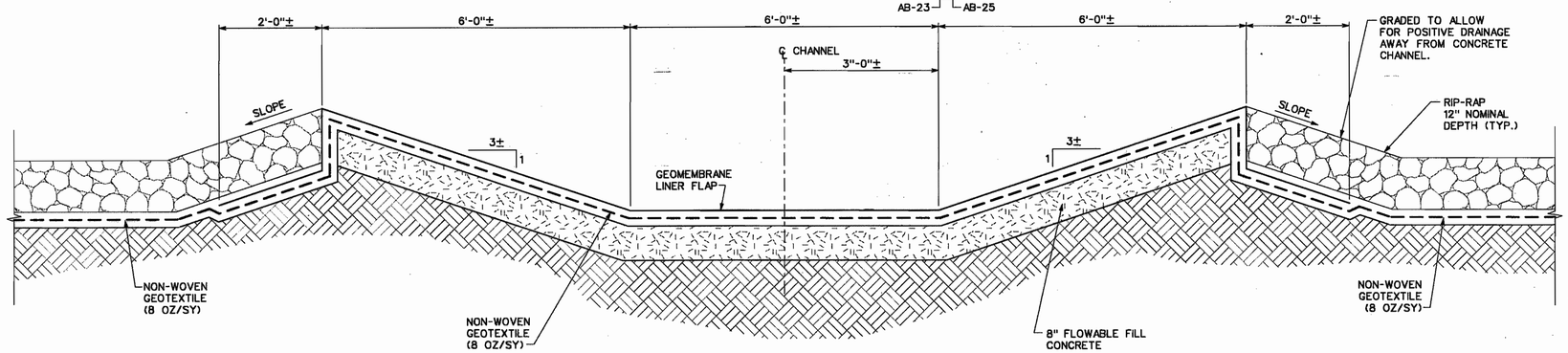

SECTION TYPICAL CONCRETE CHANNEL (C) — AB-23 / AB-25
NOT TO SCALE

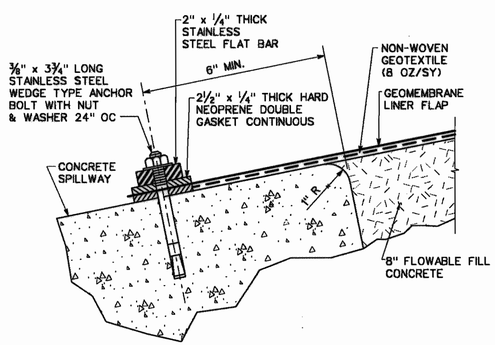

DETAIL LINER BATTEN STRIP ANCHOR (3) — AB-24 / AB-25
NOT TO SCALE

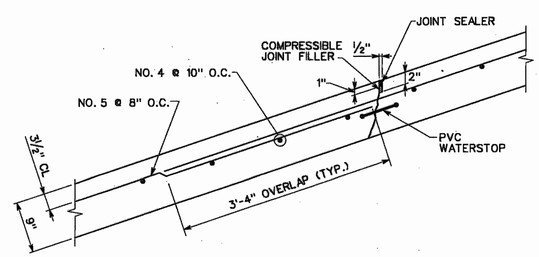

DETAIL CONSTRUCTION JOINT (CJ) (1) — AB-23 / AB-25
NOT TO SCALE

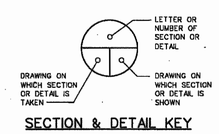

SECTION & DETAIL KEY

STATE OF KENTUCKY — SAMUEL P. MAYER 12237 — LICENSED PROFESSIONAL ENGINEER
6-17-03
ENGINEER / SURVEYOR SEAL

NO	DATE	REVISION	ASBLT BY	DR BY	CHKD	ENGR	PROJ MGR	APPR
0	06/17/03	AS-BUILT						

Shaw® Shaw Environmental, Inc.

AS-BUILT BY: / DRAWN BY:
CHECKED BY: / DRAWING CHECK BY:
ENGINEER/SURVEYOR APPROVAL: / PROJECT MANAGER:

CONFIDENTIAL PROPERTY OF SHAW ENVIRONMENTAL, INC.

THIS DRAWING AND ALL INFORMATION THEREON IS CONFIDENTIAL AND MUST NOT BE MADE PUBLIC OR COPIED UNLESS DULY AUTHORIZED, SHALL NOT BE USED EXCEPT FOR THE PURPOSE FOR WHICH IT WAS SUPPLIED, AND IS SUBJECT TO RETURN ON DEMAND. ALL RIGHTS OF INVENTION OR DESIGN ARE RESERVED.

MAXEY FLATS DISPOSAL SITE
FLEMING COUNTY, KENTUCKY

EDB Y-CHANNEL OUTLET
SECTIONS AND DETAILS
(AS-BUILT)

STARTING DATE	JOB NO.	DRAWING NO.	REV
4/01/03	838409	AB-25	0

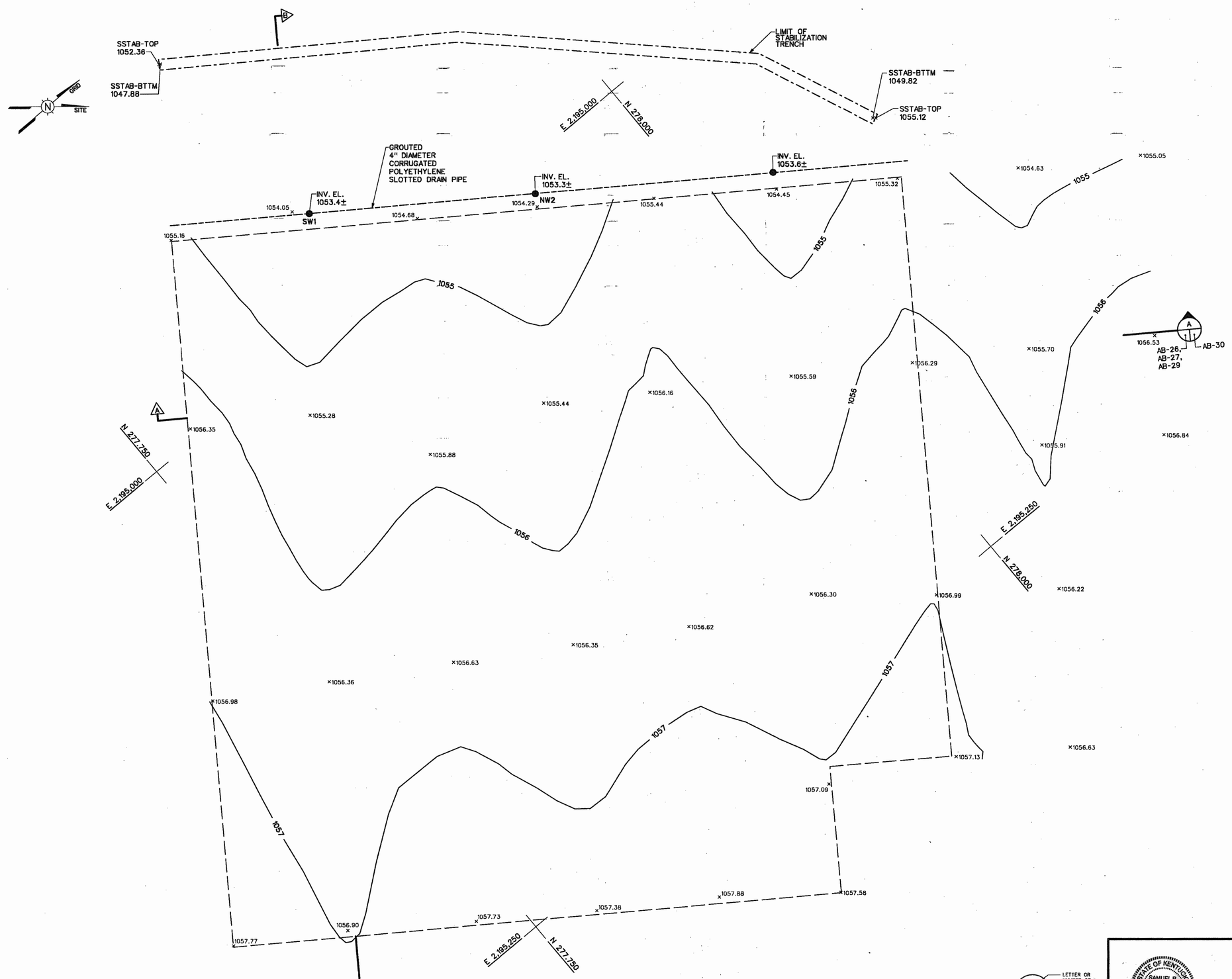

EMC BUNKER TOP OF SUBGRADE AS-BUILT
SCALE: 1"=20'-0"

SCALE: 1"=20'
0 20 40 FEET
GRAPHIC SCALE

LETTER OR NUMBER OF SECTION OR DETAIL
DRAWING ON WHICH SECTION OR DETAIL IS TAKEN
DRAWING ON WHICH SECTION OR DETAIL IS SHOWN
SECTION & DETAIL KEY

NOTES:

1. EMC BUNKER SUBGRADE AS-BUILT SURVEY WAS PERFORMED BY CURD SURVEYING, ENGINEERING & LAND CONSULTING, INC. ON AUGUST 29, 1997.

LEGEND

- EMC BUNKER FOOT PRINT
- ×1057.13 SPOT ELEVATION ON TOP OF SUBGRADE
- 1056 SUBGRADE CONTOURS
- CLEANOUT

SURVEYOR'S CERTIFICATION

I certify that this drawing depicts details of a topographical survey conducted by me or under my direction. This certification pertains to planimetric and vertical locations only. See Civil General Note #2 at Sheet AB-3 for horizontal and vertical origins.

Rickey B. Newton — 3674 KY PLS — 6/17/03 Date

NO	DATE	REVISION	AS-BUILT BY	DR BY	CHKD	ENGR	PROJ MGR	APPR
0	06/17/03	AS-BUILT	JW	JW	LG	MMW		

Shaw® Shaw Environmental, Inc.

AS-BUILT BY: JW
DRAWN BY: JW
CHECKED BY: RN
DRAWING CHECK BY: Jon Stat
ENGINEER/SURVEYOR APPROVAL: Samuel R. Mayes
PROJECT MANAGER: Michael W. Lamm

CONFIDENTIAL PROPERTY OF SHAW ENVIRONMENTAL, INC.

THIS DRAWING AND ALL INFORMATION THEREON IS CONFIDENTIAL AND MUST NOT BE MADE PUBLIC OR COPIED UNLESS DULY AUTHORIZED, SHALL NOT BE USED EXCEPT FOR THE PURPOSE FOR WHICH IT WAS SUPPLIED, AND IS SUBJECT TO RETURN ON DEMAND. ALL RIGHTS OF INVENTION OR DESIGN ARE RESERVED.

STATE OF KENTUCKY — SAMUEL R. MAYES — LICENSED PROFESSIONAL ENGINEER — 6-17-03

STATE of KENTUCKY — R.B. NEWTON 3674 — LICENSED PROFESSIONAL LAND SURVEYOR

ENGINEER / SURVEYOR SEAL

MAXEY FLATS DISPOSAL SITE
FLEMING COUNTY, KENTUCKY

EMC BUNKER TOP OF SUBGRADE, DRAIN PIPE, AND STABILIZATION TRENCH (AS-BUILT)

STARTING DATE	JOB NO.	DRAWING NO.	REV
03/06/03	838409	AB-26	0

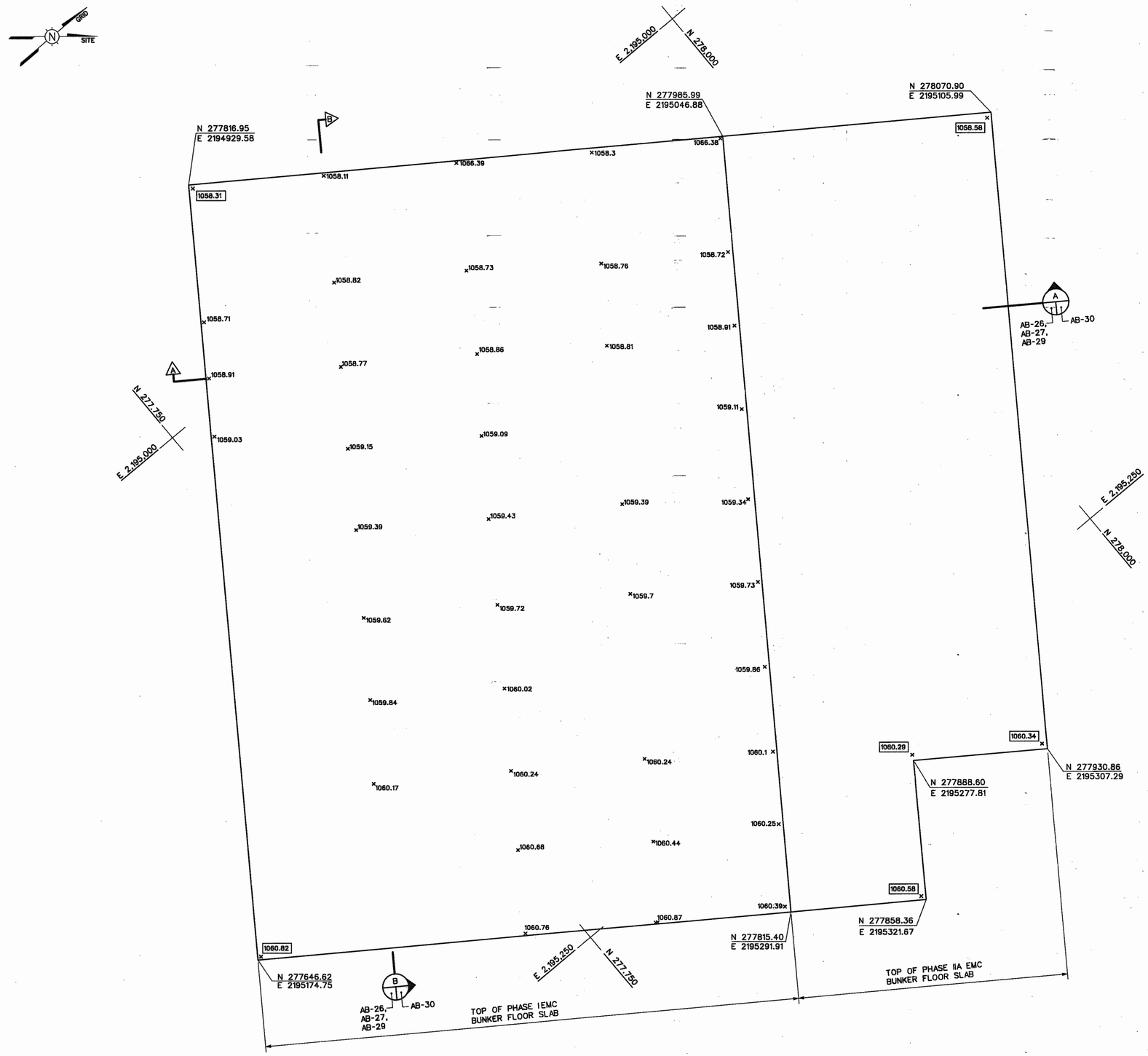

EMC BUNKER TOP OF
FLOOR SLAB AS-BUILT
SCALE: 1"=20'-0"

SCALE: 1"=20'
0 20 40 FEET
GRAPHIC SCALE

LETTER OR NUMBER OF SECTION OR DETAIL
DRAWING ON WHICH SECTION OR DETAIL IS TAKEN
DRAWING ON WHICH SECTION OR DETAIL IS SHOWN
SECTION & DETAIL KEY

NOTES:

1. PHASE 1 EMC BUNKER TOP OF FLOOR SLAB AS-BUILT SURVEY WAS PERFORMED BY CURD SURVEYING, ENGINEERING & LAND CONSULTING, INC. ON APRIL 29, 1999.

LEGEND

———	EXTENT OF CONCRETE
× 1060.42	SPOT ELEVATION ON TOP OF SLAB (FIELD VERIFIED ELEVATIONS)
× 1060.58	SPOT ELEVATION ON TOP OF SLAB (CALCULATED FROM AS-BUILT ROOF ELEVATION BY CURD SURVEYING, ENGINEERING & LAND CONSULTING, INC. ON OCT. 25, 2000)

NO	DATE	REVISION	AS-BUILT BY	DR BY	CHKD	ENGR	PROJ MGR	APPR
0	06/17/03	AS-BUILT	JW	JW	LS	MPW		

Shaw Environmental, Inc.

AS-BUILT BY: Jeff Watts
DRAWN BY: Jeff Watts
CHECKED BY:
DRAWING CHECK BY: Gary Hart
ENGINEER/SURVEYOR APPROVAL: Samuel R. Mayes
PROJECT MANAGER: Marshall Rogers

CONFIDENTIAL PROPERTY OF
SHAW ENVIRONMENTAL, INC.

THIS DRAWING AND ALL INFORMATION THEREON IS CONFIDENTIAL AND MUST NOT BE MADE PUBLIC OR COPIED UNLESS DULY AUTHORIZED, SHALL NOT BE USED EXCEPT FOR THE PURPOSE FOR WHICH IT WAS SUPPLIED, AND IS SUBJECT TO RETURN ON DEMAND. ALL RIGHTS OF INVENTION OR DESIGN ARE RESERVED.

MAXEY FLATS DISPOSAL SITE
FLEMING COUNTY, KENTUCKY

EMC BUNKER TOP OF FLOOR SLAB (AS-BUILT)

STATE OF KENTUCKY
SAMUEL R. MAYES
22937
LICENSED
PROFESSIONAL ENGINEER

6-17-03

ENGINEER / SURVEYOR SEAL

STARTING DATE	JOB NO.	DRAWING NO.	REV
03/06/03	838409	AB-27	0

M:\maxey-flats_2\As-Built Drawings\AB-ASBLT-27.dgn 06/18/03 jwaters 12:27:52 PM

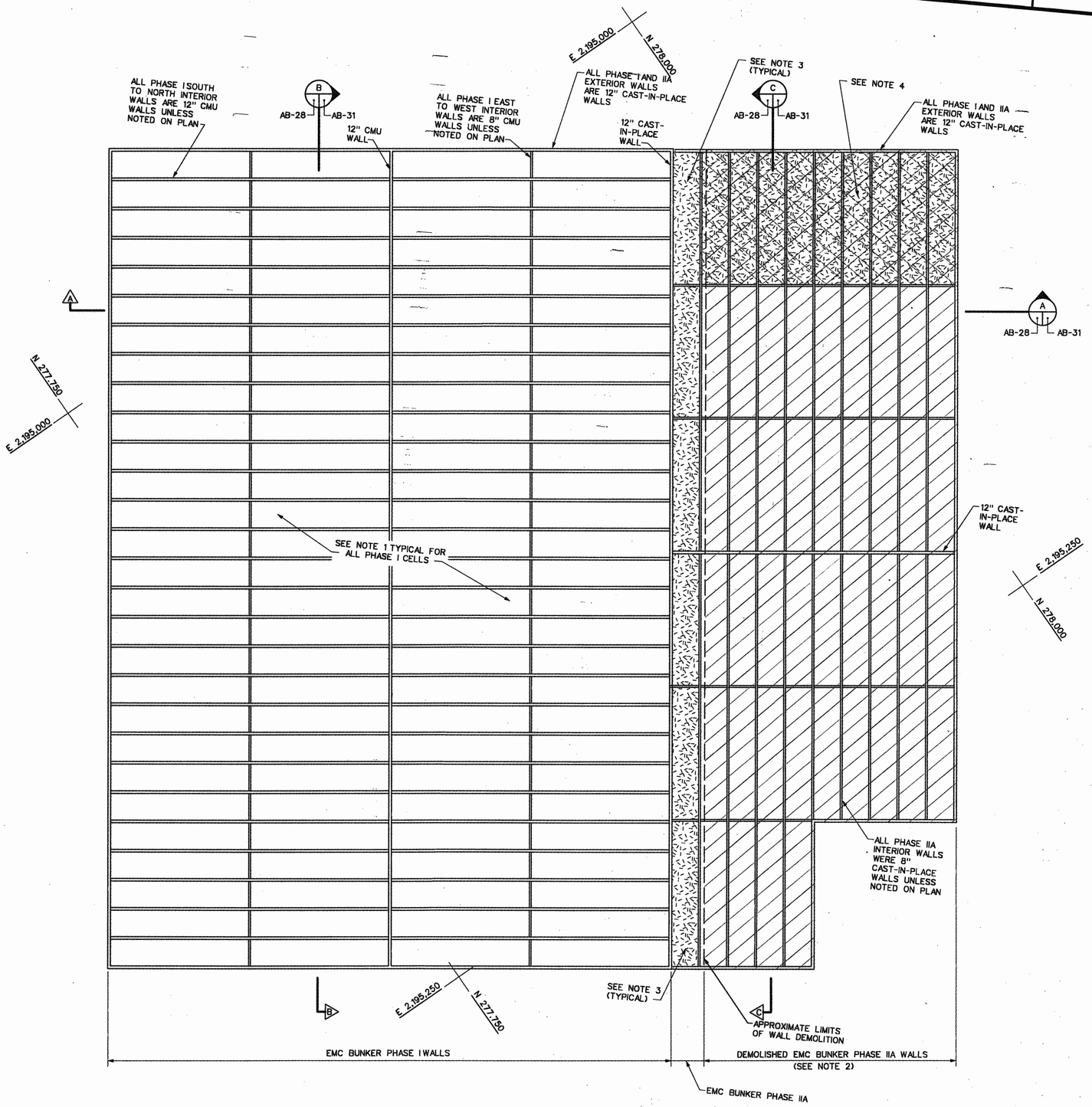

EMC BUNKER
WALL AS-BUILT
SCALE: 1"=20'-0"

NOTES:

1. REFER EPA APPROVED RA CONSTRUCTION REPORT. FOR DESCRIPTION OF WASTE PLACED IN PHASE I, EMC BUNKER CELLS.
2. PHASE IIA WALLS WERE DEMOLISHED DOWN TO 3'-0" ± FROM THE EMC BUNKER FLOOR.
3. CLOSED-OUT 6 PHASE IIA EMC BUNKER CELLS ADJACENT TO PHASE I EMC BUNKER WITH FLOWABLE FILL.
4. FILLED 9 PHASE IIA EMC BUNKER CELLS ALONG WESTERN WALL WITH 6" ± FLOWABLE FILL FROM THE EMC BUNKER FLOOR.

SCALE: 1"=20'
0 20 40 FEET
GRAPHIC SCALE

LETTER OR NUMBER OF SECTION OR DETAIL
DRAWING ON WHICH SECTION OR DETAIL IS TAKEN
DRAWING ON WHICH SECTION OR DETAIL IS SHOWN
SECTION & DETAIL KEY

STATE OF KENTUCKY
SAMUEL R. MAYES
22811
LICENSED
PROFESSIONAL ENGINEER
6-17-03

NO	DATE	REVISION	ASS. BY	DR BY	CHKD	ENGR	PROJ MGR	APPR
0	06/17/03	AS-BUILT						

Shaw Shaw Environmental, Inc.

AS-BUILT BY:
CHECKED BY:
DRAWN BY:
DRAFTING CHECK BY:
ENGINEER/SURVEYOR APPROVAL:
PROJECT MANAGER:

CONFIDENTIAL PROPERTY OF SHAW ENVIRONMENTAL, INC.
THIS DRAWING AND ALL INFORMATION THEREON IS CONFIDENTIAL AND MUST NOT BE MADE PUBLIC OR COPIED UNLESS DULY AUTHORIZED, SHALL NOT BE USED EXCEPT FOR THE PURPOSE FOR WHICH IT WAS SUPPLIED, AND IS SUBJECT TO RETURN ON DEMAND. ALL RIGHTS OF INVENTION OR DESIGN ARE RESERVED.

MAXEY FLATS DISPOSAL SITE
FLEMING COUNTY, KENTUCKY

EMC BUNKER WALLS
(AS-BUILT)

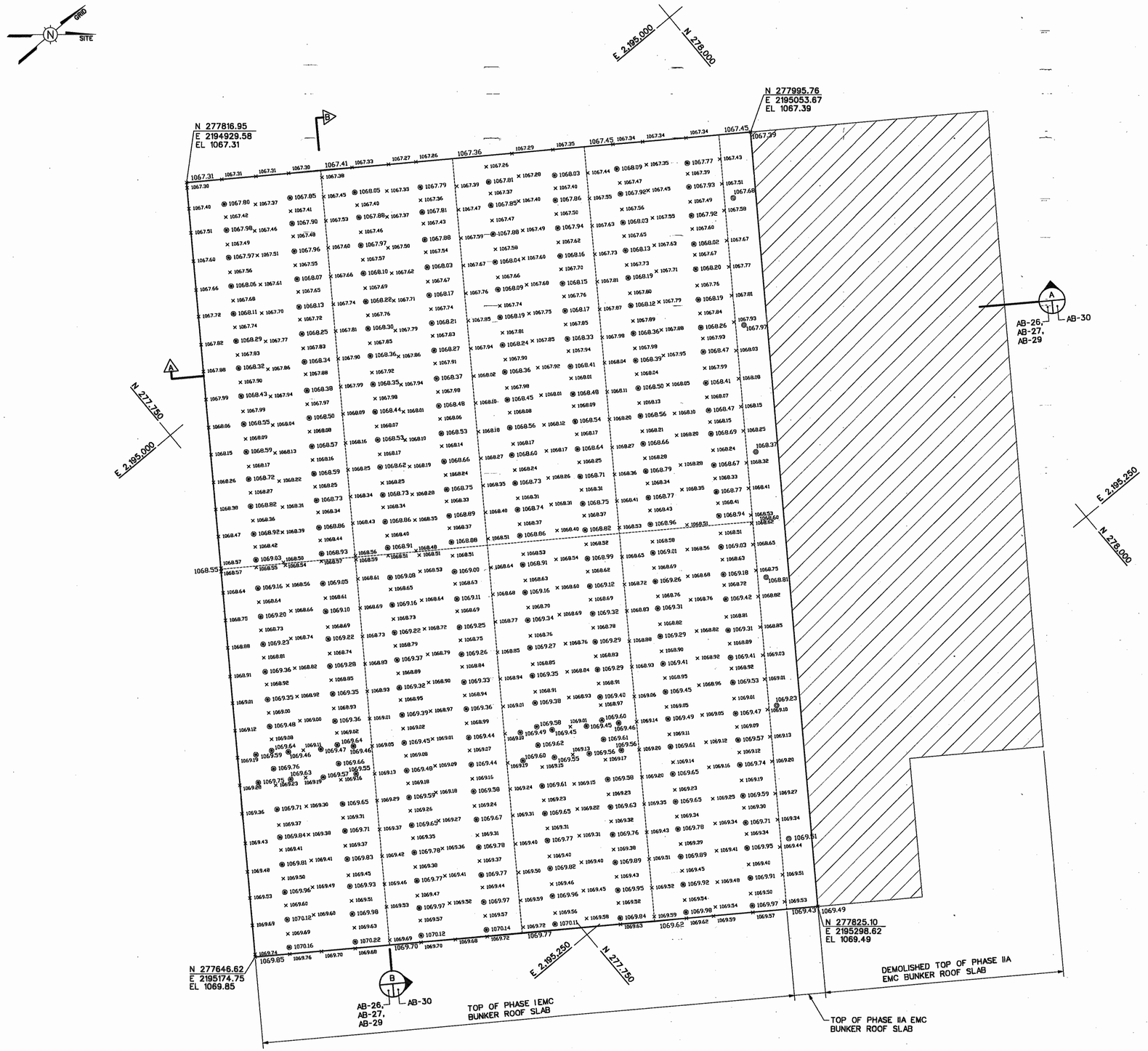

EMC BUNKER TOP OF
ROOF SLAB AS-BUILT
SCALE: 1"=20'-0"

NOTES:

1. PHASE 1 EMC BUNKER TOP OF ROOF SLAB AS-BUILT SURVEY WAS PERFORMED BY CURD SURVEYING, ENGINEERING & LAND CONSULTING, INC. ON JULY 1 AND JULY 8, 2002.
2. MANHOLE COVER WAS REMOVED. THE BUNKER PORT WAS FILLED WITH NON-SHRINK GROUT.

LEGEND

- EXTENT OF CONCRETE LIMITS
- JOINT LINE BETWEEN CONCRETE
- DOMED CONCRETE MANHOLES (SEE NOTE 2)
- STEEL MANHOLES (SEE NOTE 2)
- SPOT ELEVATION ON TOP OF SLAB
- DEMOLISHED TOP OF PHASE IIA EMC BUNKER ROOF SLAB

SCALE: 1"=20'
0 20 40 FEET
GRAPHIC SCALE

SECTION & DETAIL KEY
LETTER OR NUMBER OF SECTION OR DETAIL
DRAWING ON WHICH SECTION OR DETAIL IS TAKEN
DRAWING ON WHICH SECTION OR DETAIL IS SHOWN

STATE OF KENTUCKY
SAMUEL R. MAYES
22822
LICENSED PROFESSIONAL ENGINEER
6-17-03
ENGINEER / SURVEYOR SEAL

NO	DATE	REVISION	ASB'LT BY	DR BY	CHKD	ENGR	PROJ MGR	APPR
0	06/17/03	AS-BUILT	JW	JW	CS	SM	MPE	

Shaw Environmental, Inc.
AS-BUILT BY: JW
DRAWN BY: JW
CHECKED BY:
DRAFTING CHECK BY:
ENGINEER/SURVEYOR APPROVAL:
PROJECT MANAGER:

CONFIDENTIAL PROPERTY OF
SHAW ENVIRONMENTAL, INC.

THIS DRAWING AND ALL INFORMATION THEREON IS CONFIDENTIAL AND MUST NOT BE MADE PUBLIC OR COPIED UNLESS DULY AUTHORIZED, SHALL NOT BE USED EXCEPT FOR THE PURPOSE FOR WHICH IT WAS SUPPLIED, AND IS SUBJECT TO RETURN ON DEMAND. ALL RIGHTS OF INVENTION OR DESIGN ARE RESERVED.

MAXEY FLATS DISPOSAL SITE
FLEMING COUNTY, KENTUCKY

EMC BUNKER TOP OF ROOF SLAB (AS-BUILT)

STARTING DATE	JOB NO.	DRAWING NO.	REV
03/06/03	838409	AB-29	0

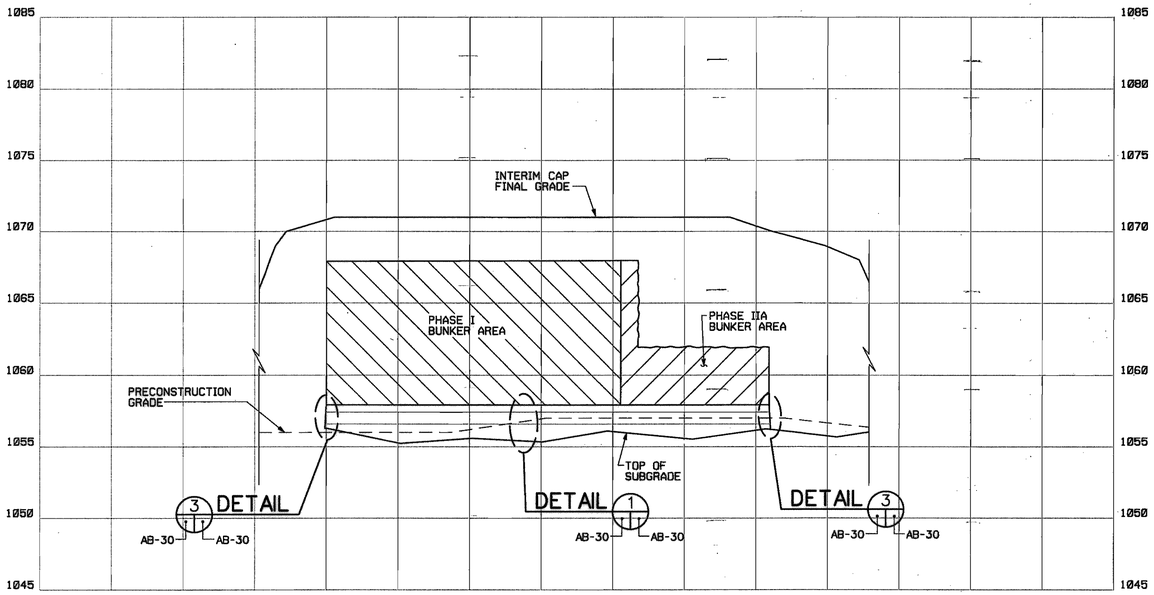

SECTION A

HORIZONTAL SCALE: 1"=50'
VERTICAL SCALE: 1"=5'
AB-26, AB-27, AB-29 — AB-30

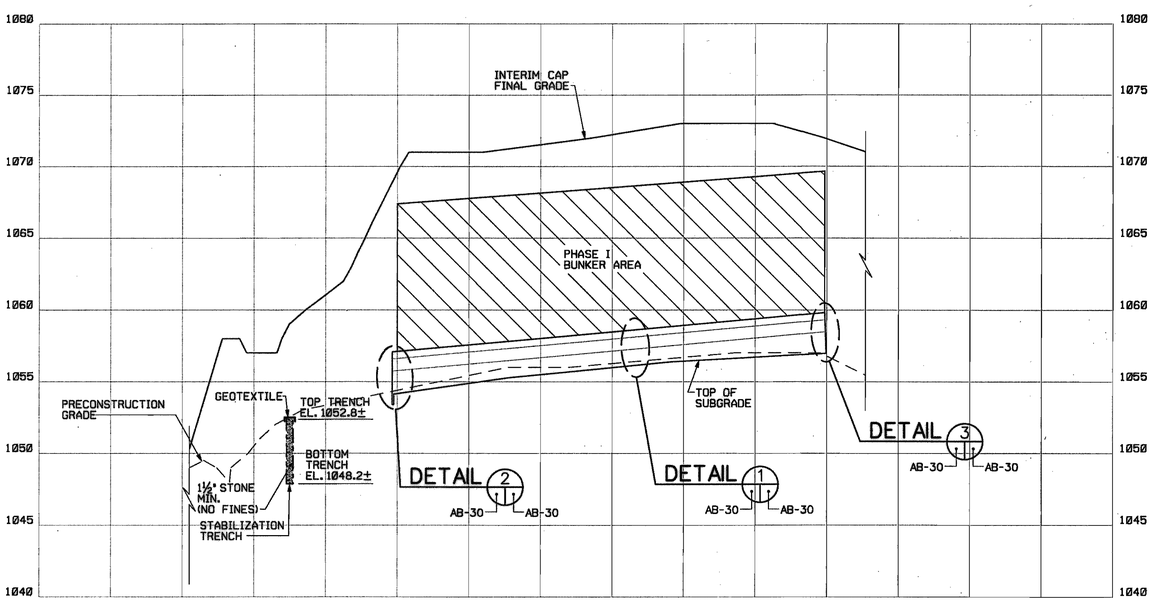

SECTION B

HORIZONTAL SCALE: 1"=50'
VERTICAL SCALE: 1"=5'
AB-26, AB-27, AB-29 — AB-30

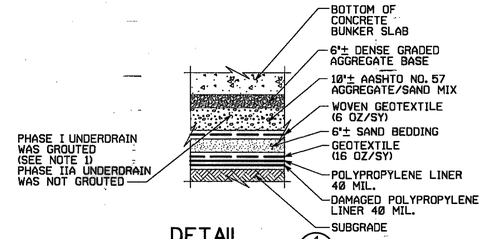

DETAIL 1

NOT TO SCALE
AB-30 — AB-30

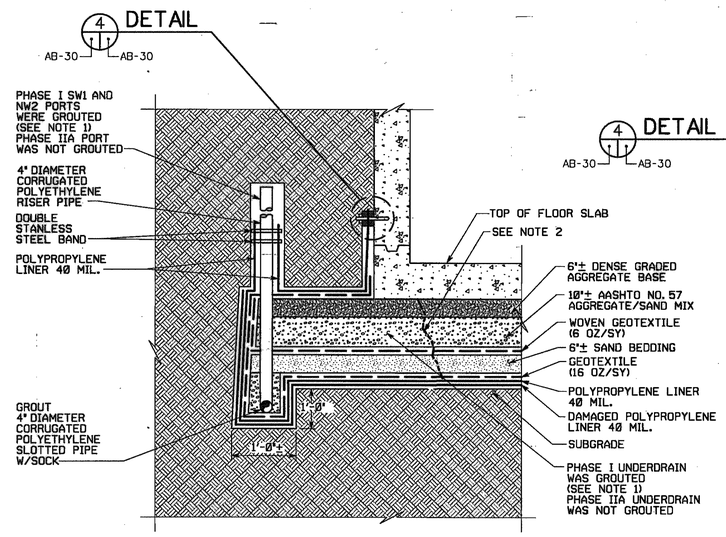

DETAIL 2

NOT TO SCALE
AB-30 — AB-30

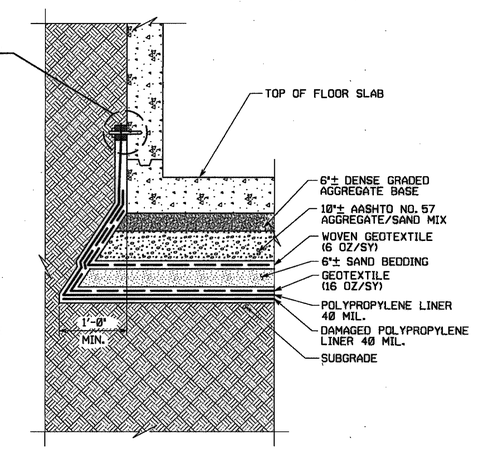

DETAIL 3

NOT TO SCALE
AB-30 — AB-30

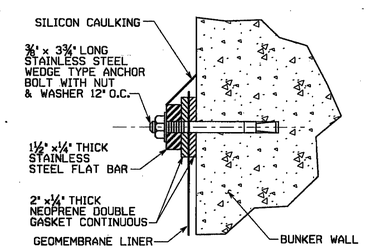

DETAIL (LINER ANCHOR) 4

NOT TO SCALE
AB-30 — AB-30

NOTES:

1. REFER TO TC-139 (PHASE I EMC BUNKER DECOMMISSIONING) FOR INFORMATION ON GROUTING UNDERDRAIN AND PIPING.
2. THE 4-INCH CORRUGATED PIPE AND PIPE TRENCH WERE GROUTED. THE LIMITS OF GROUT AS SHOWN ON THIS DRAWING ARE APPROXIMATE.

SURVEYOR'S CERTIFICATION

I certify that this drawing depicts details of a topographical survey conducted by me or under my direction. This certification pertains to planimetric and vertical locations only. See Civil General Note #2 at Sheet AB-3 for horizontal and vertical origins.

Ridley B. Newton — 3674 KY PLS — 6/17/03 Date

NO	DATE	REVISION	ASSL'D BY	DR BY	CHKD	ENGR	PROJ MGR	APPR
0	06/17/03	AS-BUILT	JW	JW	LS			

Shaw Environmental, Inc.

AS-BUILT BY: JW
DRAWN BY: JW
CHECKED BY:
DRAWING CHECK BY:
ENGINEER/SURVEYOR APPROVAL:
PROJECT MANAGER:

CONFIDENTIAL PROPERTY OF SHAW ENVIRONMENTAL, INC.

THIS DRAWING AND ALL INFORMATION THEREON IS CONFIDENTIAL AND MUST NOT BE MADE PUBLIC OR COPIED UNLESS DULY AUTHORIZED. SHALL NOT BE USED EXCEPT FOR THE PURPOSE FOR WHICH IT WAS SUPPLIED, AND IS SUBJECT TO RETURN ON DEMAND. ALL RIGHTS OF INVENTION OR DESIGN ARE RESERVED.

MAXEY FLATS DISPOSAL SITE
FLEMING COUNTY, KENTUCKY

EMC BUNKER FOUNDATION DRAIN SECTIONS AND DETAILS (AS-BUILT)

STARTING DATE	JOB NO.	DRAWING NO.	REV
3/24/03	838409	AB-30	0

HORIZONTAL SCALE: 0 — 50 — 100 FEET
GRAPHIC SCALE

VERTICAL SCALE: 0 — 5 — 10 FEET
GRAPHIC SCALE

SECTION & DETAIL KEY: LETTER OR NUMBER OF SECTION OR DETAIL; DRAWING ON WHICH SECTION OR DETAIL IS TAKEN; DRAWING ON WHICH SECTION OR DETAIL IS SHOWN

STATE OF KENTUCKY — SAMUEL R. MAYES 2863 — LICENSED PROFESSIONAL ENGINEER — 6-17-03

ENGINEER / SURVEYOR SEAL

NOTES:

1. CONCRETE FLOOR, WALLS, AND ROOF WERE CONSTRUCTED WITH REINFORCED CONCRETE UNLESS NOTED ON SECTIONS.
2. REFER TO EPA APPROVED RA CONSTRUCTION REPORT FOR DETAILS ON SOLIDIFIED LEACHATE, DRY ACTIVE WASTE AND PROCESS WATER PLACED IN PHASE I CELLS. THE REMAINING VOID SPACE WAS FILLED WITH FLOWABLE FILL TO WITHIN 6" OF THE BOTTOM OF THE BUNKER ROOF SLAB. THE REMAINING 6" WAS FILLED WITH A CLEAN LIFT OF FLOWABLE FILL. THE ACCESS MANHOLES WERE SEALED USING A NON-SHRINK GROUT.

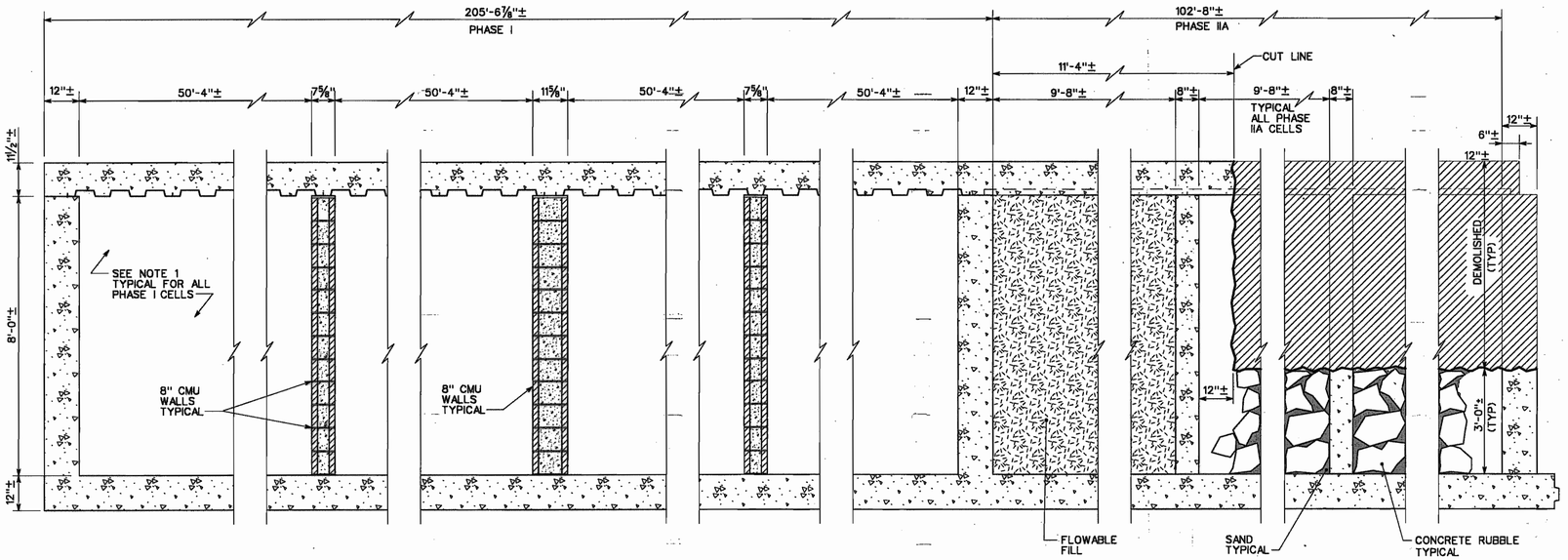

SECTION TYPICAL EMC BUNKER SECTION (A)
SCALE: ½"=1'
AB-28 AB-31

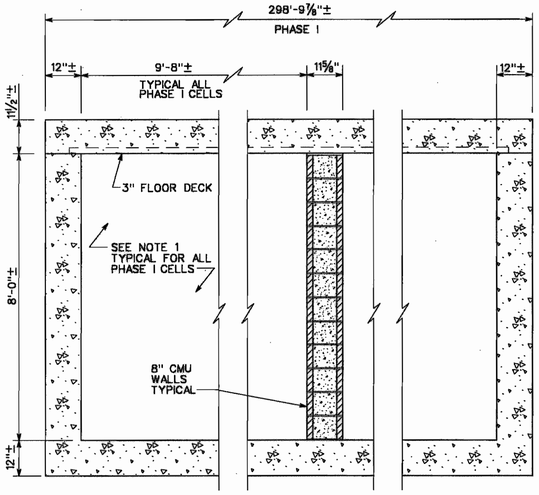

SECTION TYPICAL EMC BUNKER SECTION (B)
SCALE: ½"=1'
AB-28 AB-31

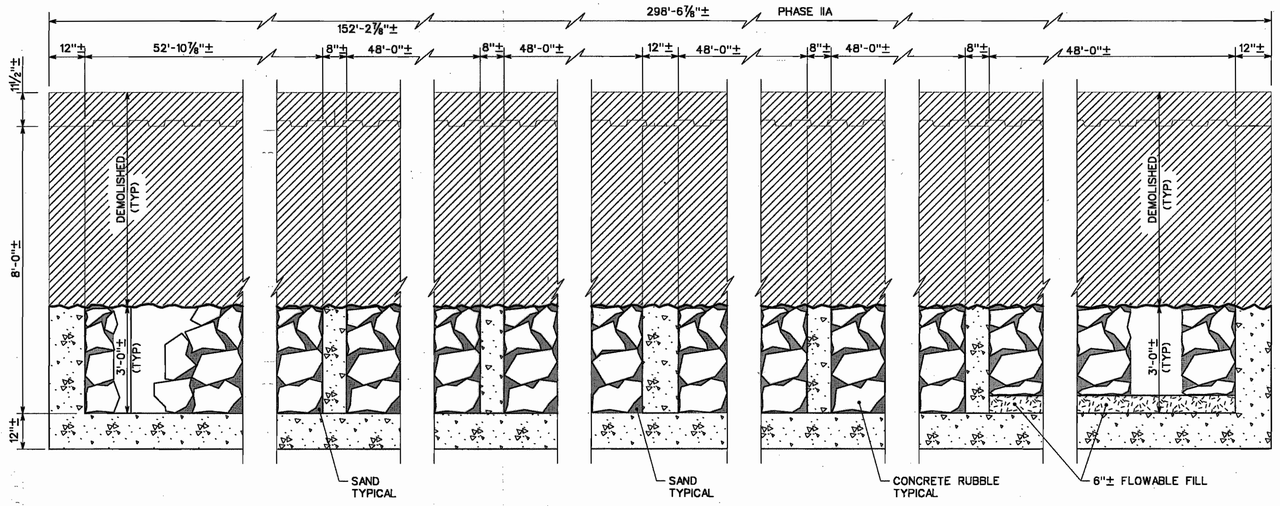

SECTION TYPICAL EMC BUNKER SECTION (C)
SCALE: ½"=1'
AB-28 AB-31

LETTER OR NUMBER OF SECTION OR DETAIL
DRAWING ON WHICH SECTION OR DETAIL IS TAKEN
DRAWING ON WHICH SECTION OR DETAIL IS SHOWN

SECTION & DETAIL KEY

STATE OF KENTUCKY SAMUEL R. MAYES 2362 LICENSED PROFESSIONAL ENGINEER
6-17-03
ENGINEER / SURVEYOR SEAL

NO	DATE	REVISION	ASBLT BY	DR BY	CHKD	ENGR	PROJ MGR	APPR
0	06/17/03	AS-BUILT	JWJW	LS				

Shaw Shaw Environmental, Inc.
AS-BUILT BY: J.H. Watts
DRAWN BY: J.H. Watts
CHECKED BY: M.R.
DRAFTING CHECK BY: Ben Stott
ENGINEER/SURVEYOR APPROVAL: Samuel R. Mayes
PROJECT MANAGER: Michael Clemmer

CONFIDENTIAL PROPERTY OF SHAW ENVIRONMENTAL, INC.

THIS DRAWING AND ALL INFORMATION THEREON IS CONFIDENTIAL AND MUST NOT BE MADE PUBLIC OR COPIED UNLESS DULY AUTHORIZED, SHALL NOT BE USED EXCEPT FOR THE PURPOSE FOR WHICH IT WAS SUPPLIED, AND IS SUBJECT TO RETURN ON DEMAND. ALL RIGHTS OF INVENTION OR DESIGN ARE RESERVED.

MAXEY FLATS DISPOSAL SITE
FLEMING COUNTY, KENTUCKY

EMC BUNKER
TYPICAL SECTIONS
(AS-BUILT)

STARTING DATE	JOB NO.	DRAWING NO.	REV
03/16/03	838409	AB-31	0

W:\maxey_flats_2\As-Built Drawings\MF-ASBL-T-31.dgn 03/19/03 3:31 PM 06/16/03 jwalters

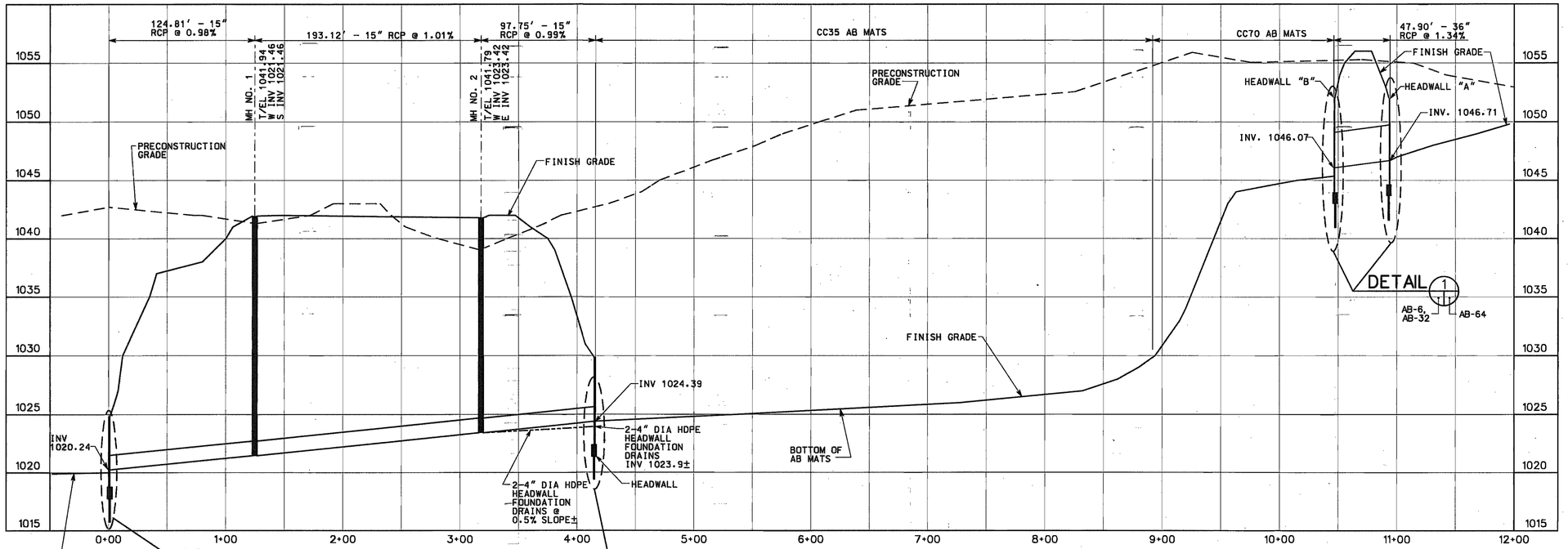

DETAIL 1 — AB-8, AB-32 — AB-33

DETAIL 1 — AB-8, AB-32 — AB-33

PROFILE — NORTH CHANNEL (A) — AB-4 — AB-32

HORIZONTAL SCALE: 1"=50'
VERTICAL SCALE: 1"=5'

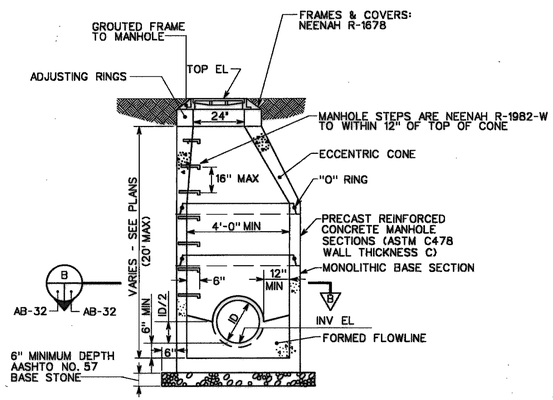

DETAIL — PRECAST CONCRETE MANHOLE (1) — AB-32 — AB-32

NOT TO SCALE

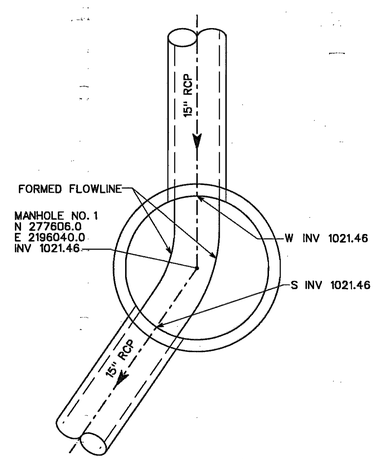

MANHOLE NO. 1

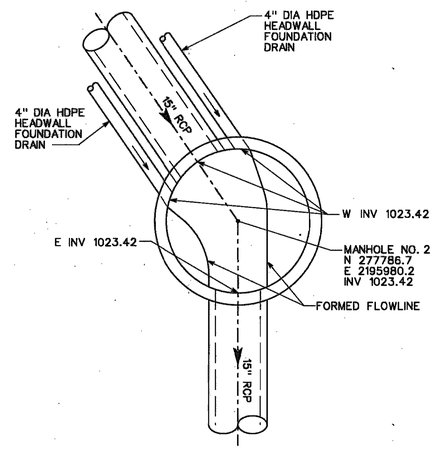

MANHOLE NO. 2

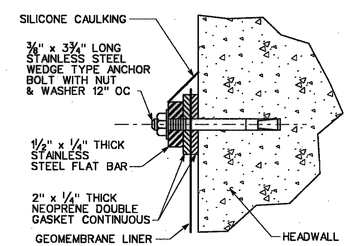

DETAIL (LINER ANCHOR) (2) — AB-34 — AB-33

NOT TO SCALE

SECTION (B) — AB-32 — AB-32

NOT TO SCALE

SCALE: 1"=5'
0 5 10 FEET
GRAPHIC SCALE

SCALE: 1"=50'
0 50 100 FEET
GRAPHIC SCALE

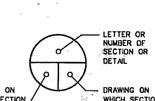

SECTION & DETAIL KEY

STATE OF KENTUCKY — SAMUEL R. MAYES 9937 — PROFESSIONAL ENGINEER
6-17-03

STATE of KENTUCKY — R.B. NEWTON 3674 — LICENSED PROFESSIONAL LAND SURVEYOR

ENGINEER / SURVEYOR SEAL

SURVEYOR'S CERTIFICATION

I certify that this drawing depicts details of a topographical survey conducted by me or under my direction. This certification pertains to planimetric and vertical locations only. See Civil General Note #2 at Sheet AB-3 for horizontal and vertical origins.

Richey B. Newton — 3674 KY PLS — 6/17/03 Date

NO	DATE	REVISION	ASBLT BY	DR BY	CHKD	ENGR	PROJ MGR	APPR
0	06/17/03	AS-BUILT						

Shaw Environmental, Inc.

AS-BUILT BY: — DRAWN BY:
CHECKED BY: — DRAFTING CHECK BY:
ENGINEER/SURVEYOR APPROVAL: — PROJECT MANAGER:

CONFIDENTIAL PROPERTY OF SHAW ENVIRONMENTAL, INC.

THIS DRAWING AND ALL INFORMATION THEREON IS CONFIDENTIAL AND MUST NOT BE MADE PUBLIC OR COPIED UNLESS DULY AUTHORIZED, SHALL NOT BE USED EXCEPT FOR THE PURPOSE FOR WHICH IT WAS SUPPLIED, AND IS SUBJECT TO RETURN ON DEMAND. ALL RIGHTS OF INVENTION OR DESIGN ARE RESERVED.

MAXEY FLATS DISPOSAL SITE
FLEMING COUNTY, KENTUCKY

NORTH CHANNEL PROFILE AND DETAILS (AS-BUILT)

STARTING DATE	JOB NO.	DRAWING NO.	REV
4/04/03	838409	AB-32	0

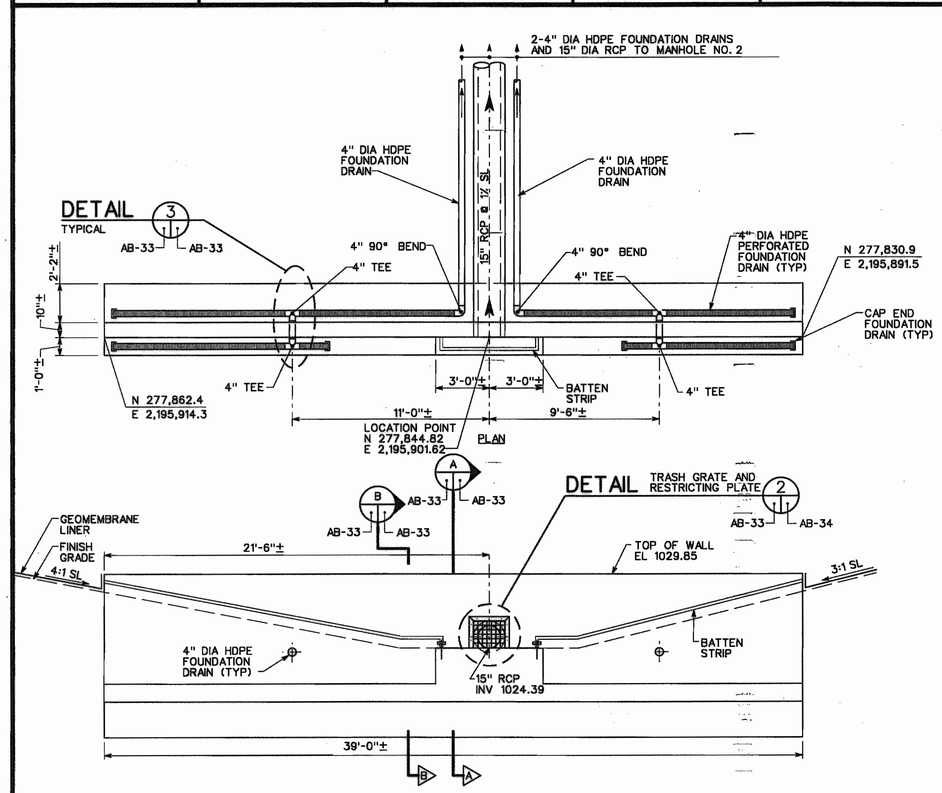

DETAIL 1 CONCRETE HEADWALL UPSTREAM
NOT TO SCALE
AB-8, AB-32 AB-33

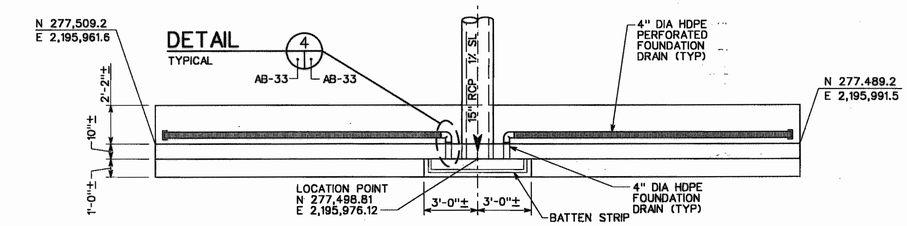

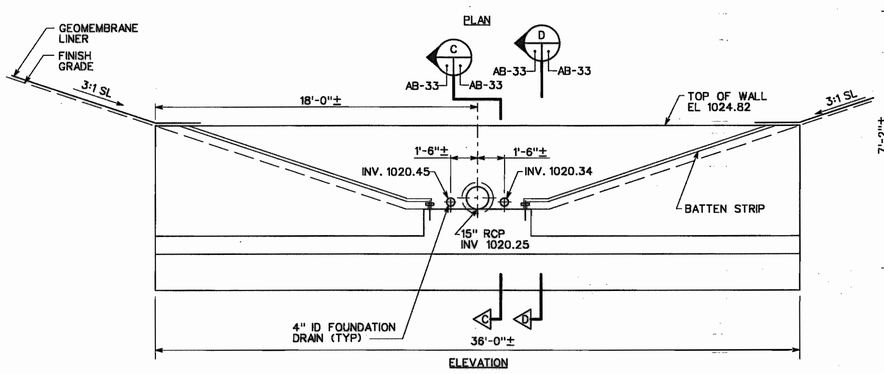

DETAIL 2 CONCRETE HEADWALL DOWNSTREAM
NOT TO SCALE
AB-8, AB-32 AB-33

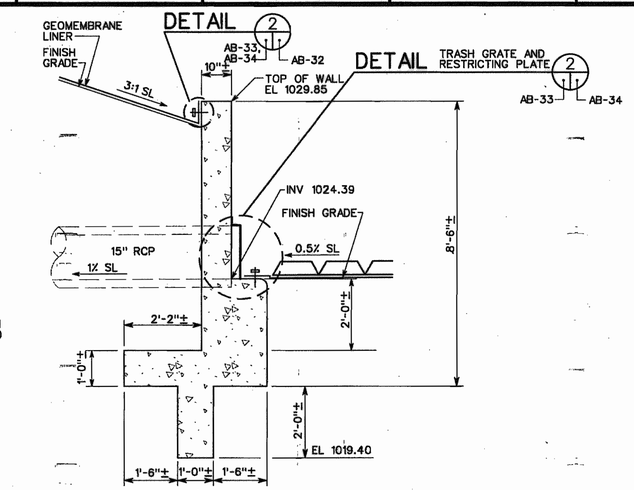

SECTION A
NOT TO SCALE
AB-33 AB-33

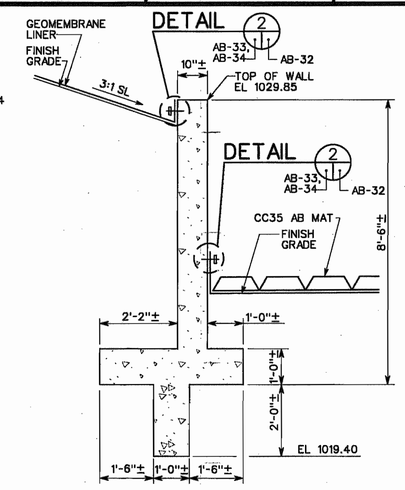

SECTION B
NOT TO SCALE
AB-33 AB-33

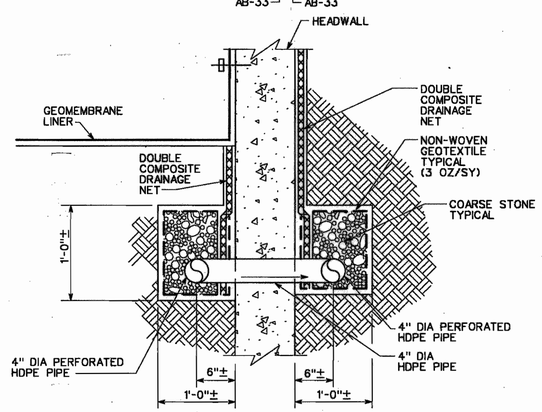

DETAIL 3 FOUNDATION DRAIN WALL PENETRATION
NOT TO SCALE
AB-33 AB-33

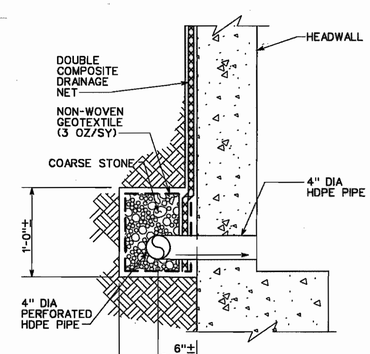

DETAIL 4 FOUNDATION DRAIN WALL PENETRATION
NOT TO SCALE
AB-33 AB-33

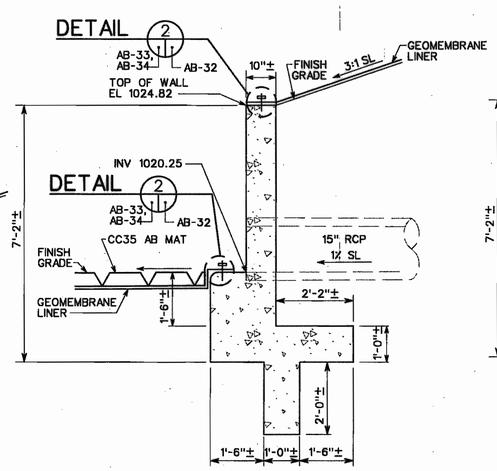

SECTION C
NOT TO SCALE
AB-33 AB-33

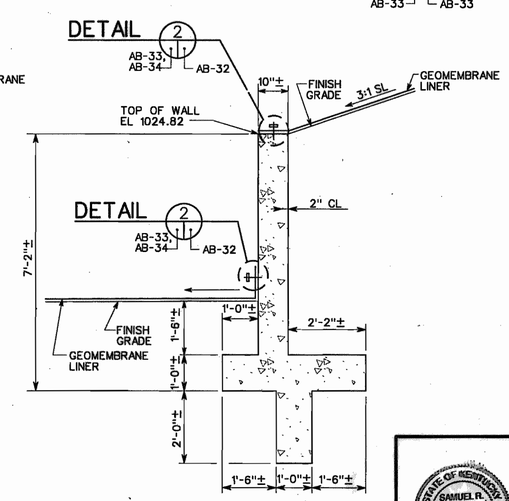

SECTION D
NOT TO SCALE
AB-33 AB-33

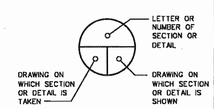

SECTION & DETAIL KEY

SURVEYOR'S CERTIFICATION

I certify that this drawing depicts details of a topographical survey conducted by me or under my direction. This certification pertains to planimetric and vertical locations only. See Civil General Note #2 at Sheet AB-3 for horizontal and vertical origins.

Rodney B. Newton — 3107A KY PLS — 6/17/03 Date

NO	DATE	REVISION	ASBLT BY	DR BY	CHKD	ENGR	PROJ MGR	APPR
0	06/17/03	AS-BUILT	JW	JW	LS			

Shaw Shaw Environmental, Inc.

AS-BUILT BY: JW Wooten
DESIGNED BY:
DRAWING CHECK BY: Don Hart
ENGINEER/SURVEYOR APPROVAL:
PROJECT MANAGER:

CONFIDENTIAL PROPERTY OF SHAW ENVIRONMENTAL, INC.

THIS DRAWING AND ALL INFORMATION THEREON IS CONFIDENTIAL AND MUST NOT BE MADE PUBLIC OR COPIED UNLESS DULY AUTHORIZED, SHALL NOT BE USED EXCEPT FOR THE PURPOSE FOR WHICH IT WAS SUPPLIED, AND IS SUBJECT TO RETURN ON DEMAND. ALL RIGHTS OF INVENTION OR DESIGN ARE RESERVED.

STATE OF KENTUCKY SAMUEL R. MAYES 22037 LICENSED PROFESSIONAL ENGINEER
6-17-03

STATE OF KENTUCKY R.B. NEWTON 3074 LICENSED PROFESSIONAL LAND SURVEYOR

ENGINEER / SURVEYOR SEAL

MAXEY FLATS DISPOSAL SITE
FLEMING COUNTY, KENTUCKY

NORTH CHANNEL DETAILS AND SECTIONS (AS-BUILT)

STARTING DATE	JOB NO.	DRAWING NO.	REV
4/04/03	838409	AB-33	0

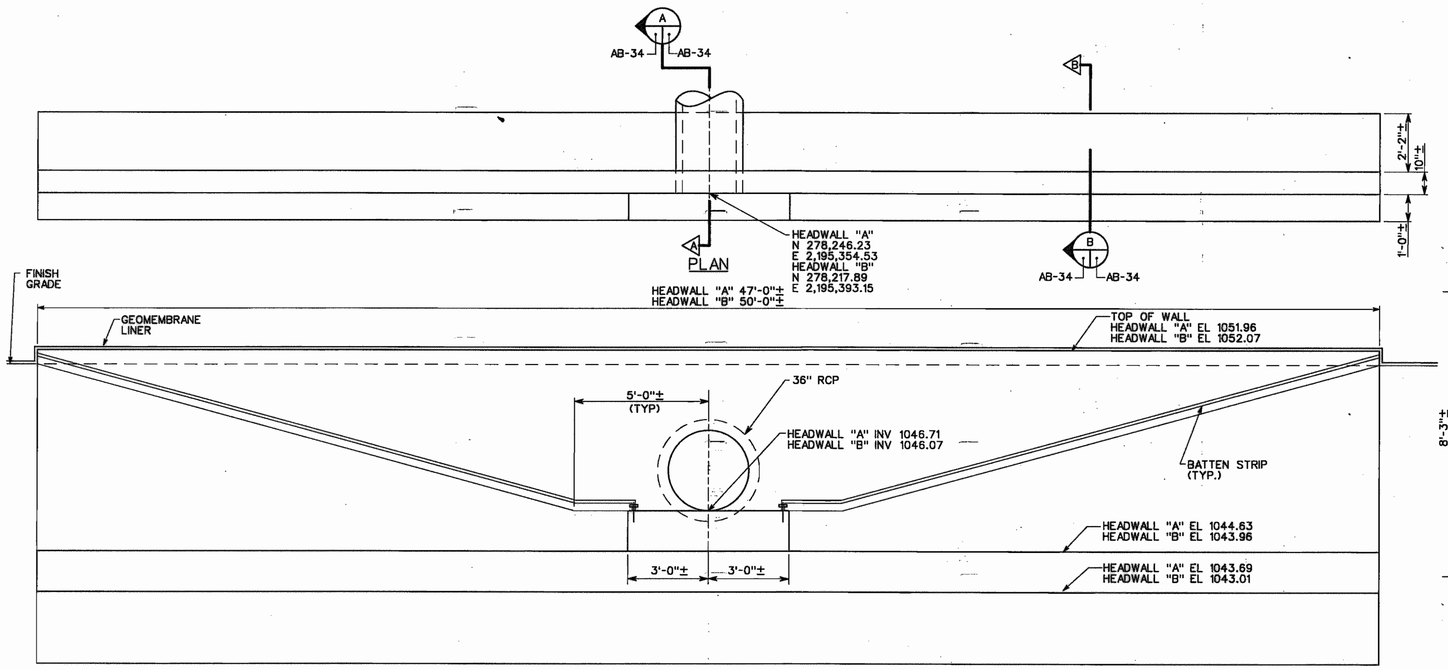

ELEVATION

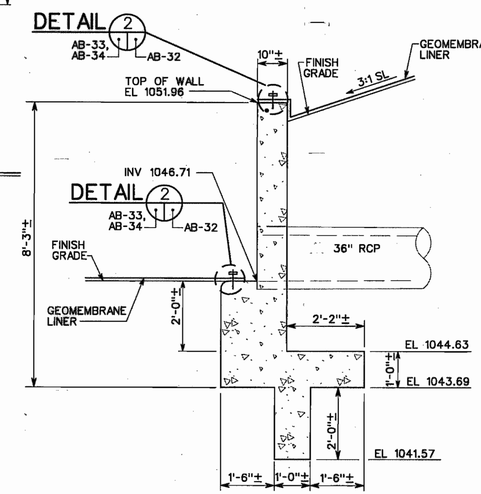

HEADWALL "A"

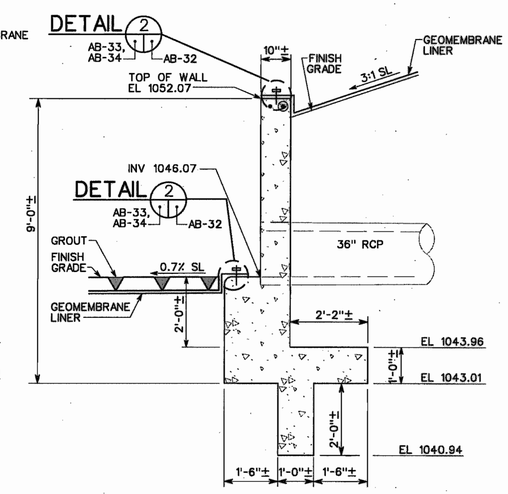

HEADWALL "B"

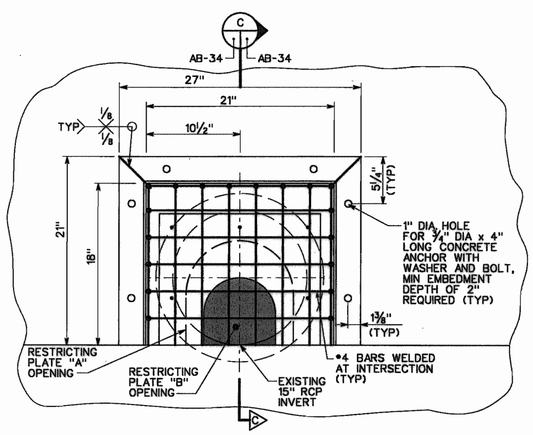

DETAIL — TRASH GRATE AND RESTRICTING PLATE (2) — NOT TO SCALE — AB-33, AB-34

DETAIL — CONCRETE HEADWALL (1) — NOT TO SCALE — AB-6, AB-32; AB-34

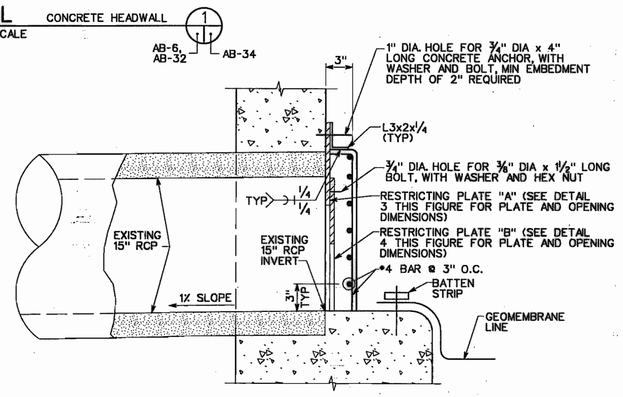

DETAIL — (C) — NOT TO SCALE — AB-34, AB-34

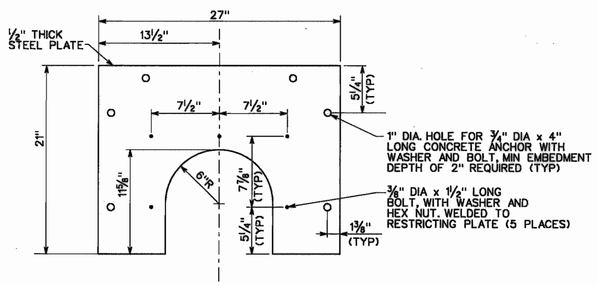

DETAIL — RESTRICTING PLATE "A" LAYOUT (3) — NOT TO SCALE — AB-34, AB-34

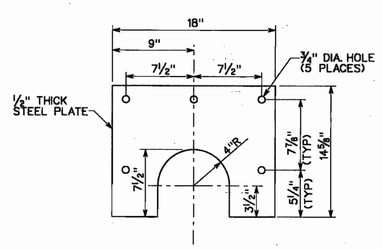

DETAIL — RESTRICTING PLATE "B" LAYOUT (4) — NOT TO SCALE — AB-34, AB-34

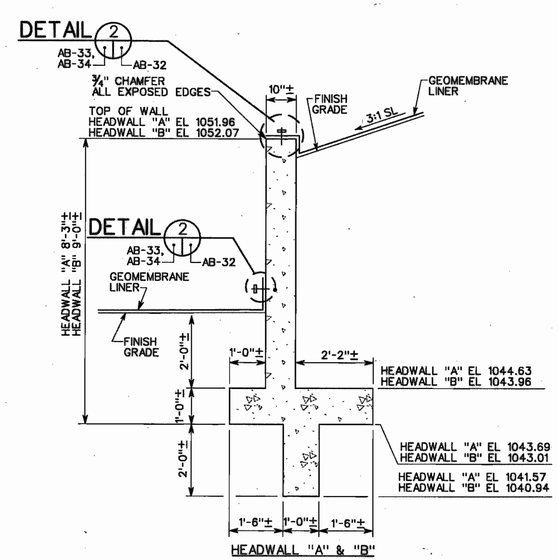

HEADWALL "A" & "B"

SECTION — (A) — NOT TO SCALE — AB-34, AB-34

SECTION — (B) — NOT TO SCALE — AB-34, AB-34

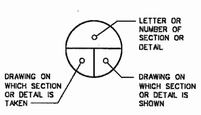

SECTION & DETAIL KEY

STATE OF KENTUCKY — SAMUEL R. MAYES 22687 — LICENSED PROFESSIONAL ENGINEER

6-17-03

STATE of KENTUCKY — R.B. NEWTON 3674 — LICENSED PROFESSIONAL LAND SURVEYOR

ENGINEER / SURVEYOR SEAL

SURVEYOR'S CERTIFICATION

I certify that this drawing depicts details of a topographical survey conducted by me or under my direction. This certification pertains to planimetric and vertical locations only. See Civil General Note #2 at Sheet AB-3 for horizontal and vertical origins.

Richey B. Newton — 3674 KY PLS — 6/17/03 Date

NO	DATE	REVISION	ASBLT BY	DR BY	CHKD	ENGR	PROJ MGR	APPR
0	06/17/03	AS-BUILT	JW	JW	CS			

Shaw Shaw Environmental, Inc.

AS-BUILT BY: — DRAWN BY: — CHECKED BY: — DATE PHS. CHECK BY: — ENGINEER/SURVEYOR APPROVAL: — PROJECT MANAGER:

CONFIDENTIAL PROPERTY OF SHAW ENVIRONMENTAL, INC.

THIS DRAWING AND ALL INFORMATION THEREON IS CONFIDENTIAL AND MUST NOT BE MADE PUBLIC OR COPIED UNLESS DULY AUTHORIZED, SHALL NOT BE USED EXCEPT FOR THE PURPOSE FOR WHICH IT WAS SUPPLIED, AND IS SUBJECT TO RETURN ON DEMAND. ALL RIGHTS OF INVENTION OR DESIGN ARE RESERVED.

MAXEY FLATS DISPOSAL SITE
FLEMING COUNTY, KENTUCKY

NORTH CHANNEL DETAILS AND SECTIONS (AS-BUILT)

STARTING DATE	JOB NO.	DRAWING NO.	REV
4/04/03	838409	AB-34	0

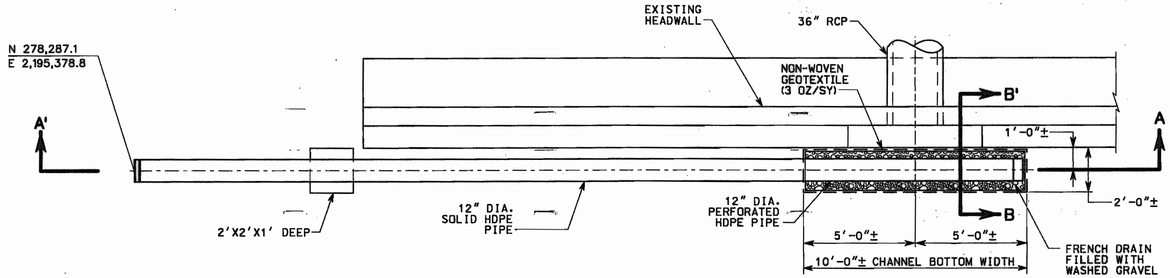

DETAIL
NOT TO SCALE

HEADWALL SUMP 1 AB-6 AB-35

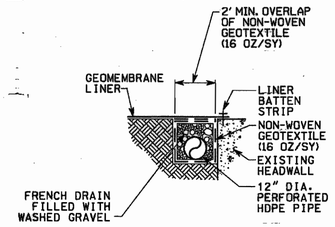

SECTION B-B'
NOT TO SCALE

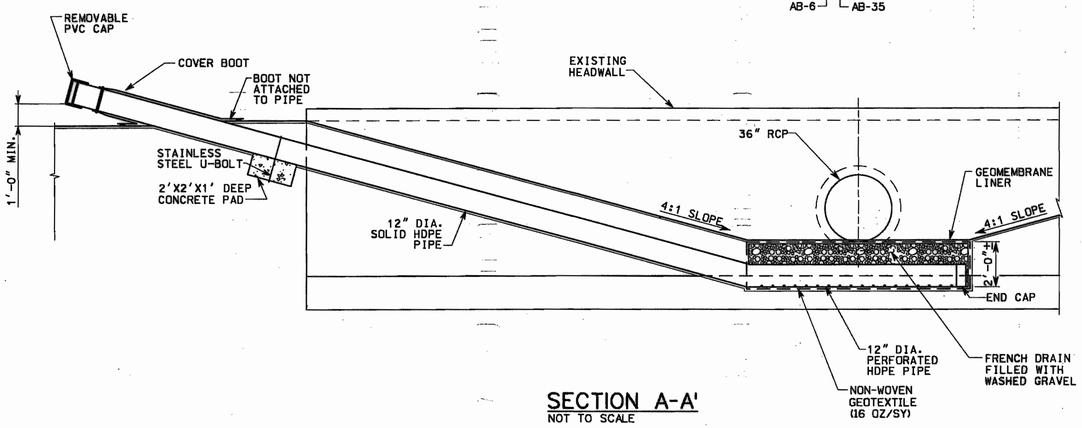

SECTION A-A'
NOT TO SCALE

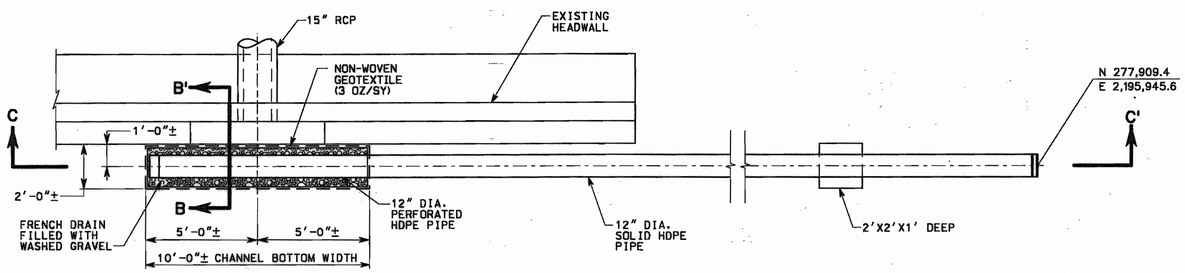

DETAIL
NOT TO SCALE

HEADWALL SUMP 2 AB-8 AB-34

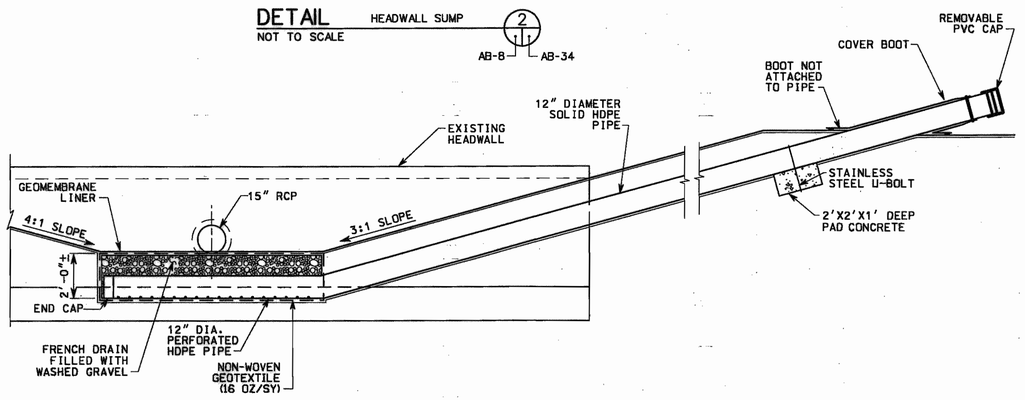

SECTION C-C'
NOT TO SCALE

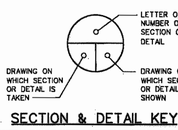

SECTION & DETAIL KEY

STATE OF KENTUCKY SAMUEL R. MAYES 22842 LICENSED PROFESSIONAL ENGINEER

6-12-03

STATE of KENTUCKY R.B. NEWTON 3674 LICENSED PROFESSIONAL LAND SURVEYOR

ENGINEER / SURVEYOR SEAL

SURVEYOR'S CERTIFICATION

I certify that this drawing depicts details of a topographical survey conducted by me or under my direction. This certification pertains to planimetric and vertical locations only. See Civil General Note #2 at Sheet AB-3 for horizontal and vertical origins.

Richey B. Newton — 3674 KY PLS — 6/17/03 Date

NO	DATE	REVISION	ASB'LT BY	DR BY	CHKD	ENGR	PROJ MGR	APPR
0	06/17/03	AS-BUILT	JW	JW	CS			

Shaw Environmental, Inc.

AS-BUILT BY: JW Watson
CHECKED BY:
ENGINEER/SURVEYOR APPROVAL:
DRAWN BY: JW Watson
DRAWING CHECK BY:
PROJECT MANAGER:

CONFIDENTIAL PROPERTY OF SHAW ENVIRONMENTAL, INC.

THIS DRAWING AND ALL INFORMATION THEREON IS CONFIDENTIAL AND MUST NOT BE MADE PUBLIC OR COPIED UNLESS DULY AUTHORIZED, SHALL NOT BE USED EXCEPT FOR THE PURPOSE FOR WHICH IT WAS SUPPLIED, AND IS SUBJECT TO RETURN ON DEMAND. ALL RIGHTS OF INVENTION OR DESIGN ARE RESERVED.

MAXEY FLATS DISPOSAL SITE
FLEMING COUNTY, KENTUCKY

NORTH CHANNEL DETAILS AND SECTIONS (AS-BUILT)

STARTING DATE	JOB NO.	DRAWING NO.	REV
4/04/03	838409	AB-35	0

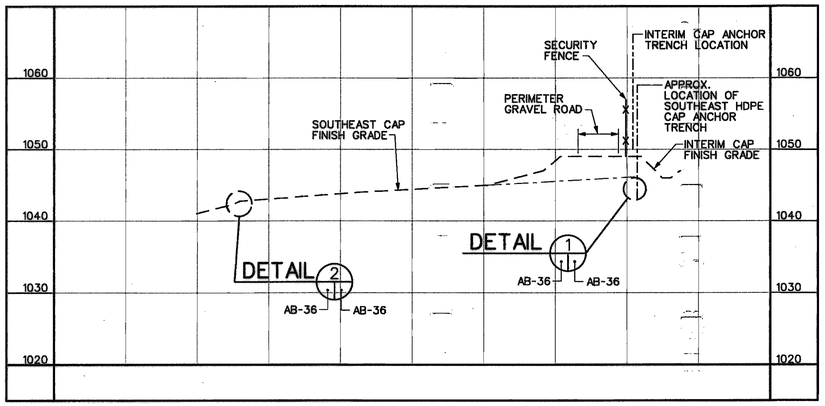

SECTION A
HORIZONTAL SCALE: 1"=50'
VERTICAL SCALE: 1"=10'
AB-7 AB-36

NOTES:

1. FOR SOUTHEAST CAP AS-BUILT TOPO SEE DRAWING AB-4 AND AB-7.

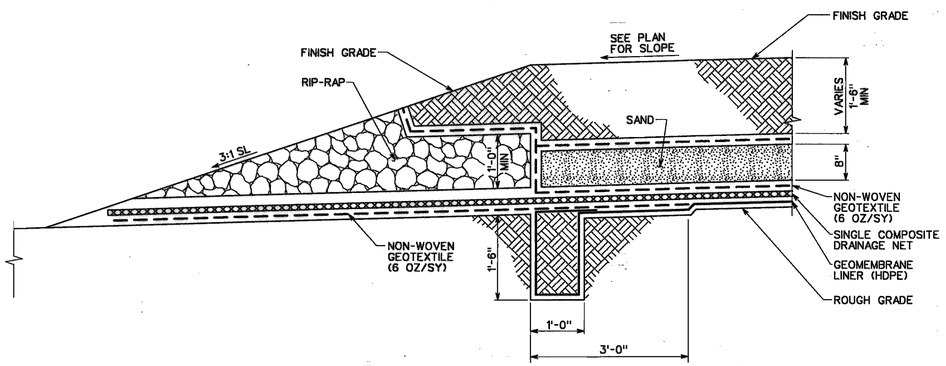

DETAIL 2
NOT TO SCALE
AB-36 AB-36

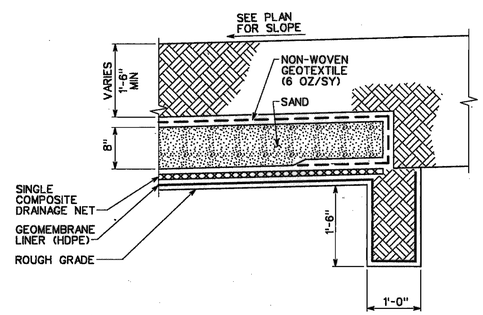

DETAIL 1
NOT TO SCALE
AB-36 AB-36

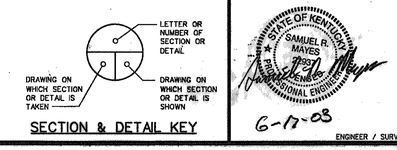

6-17-03

ENGINEER / SURVEYOR SEAL

LETTER OR NUMBER OF SECTION OR DETAIL
DRAWING ON WHICH SECTION OR DETAIL IS TAKEN
DRAWING ON WHICH SECTION OR DETAIL IS SHOWN

SECTION & DETAIL KEY

NO	DATE	REVISION	ASBLT BY	DR BY	CHKD	ENGR	PROJ MGR	APPR
0	06/17/03	AS-BUILT	JW	JW	JS			

Shaw Shaw Environmental, Inc.

AS-BUILT BY: JW Water
DRAWN BY: JW Water
CHECKED BY: JS
DRAFTING CHECK BY: Jas. Stott
ENGINEER/SURVEYOR APPROVAL: Samuel R. Mayes
PROJECT MANAGER: Michael R. Coppa

CONFIDENTIAL PROPERTY OF SHAW ENVIRONMENTAL, INC.

THIS DRAWING AND ALL INFORMATION THEREON IS CONFIDENTIAL AND MUST NOT BE MADE PUBLIC OR COPIED UNLESS DULY AUTHORIZED, SHALL NOT BE USED EXCEPT FOR THE PURPOSE FOR WHICH IT WAS SUPPLIED, AND IS SUBJECT TO RETURN ON DEMAND. ALL RIGHTS OF INVENTION OR DESIGN ARE RESERVED.

MAXEY FLATS DISPOSAL SITE
FLEMING COUNTY, KENTUCKY

SOUTHEAST CAP DETAILS AND SECTION (AS-BUILT)

STARTING DATE	JOB NO.	DRAWING NO.	REV
4/01/03	838409	AB-36	0

M:\maxey-flats_2\As-Built Drawings\AP-ASBLT-38.dgn 03-17-03 PM 06/16/03 jwaters

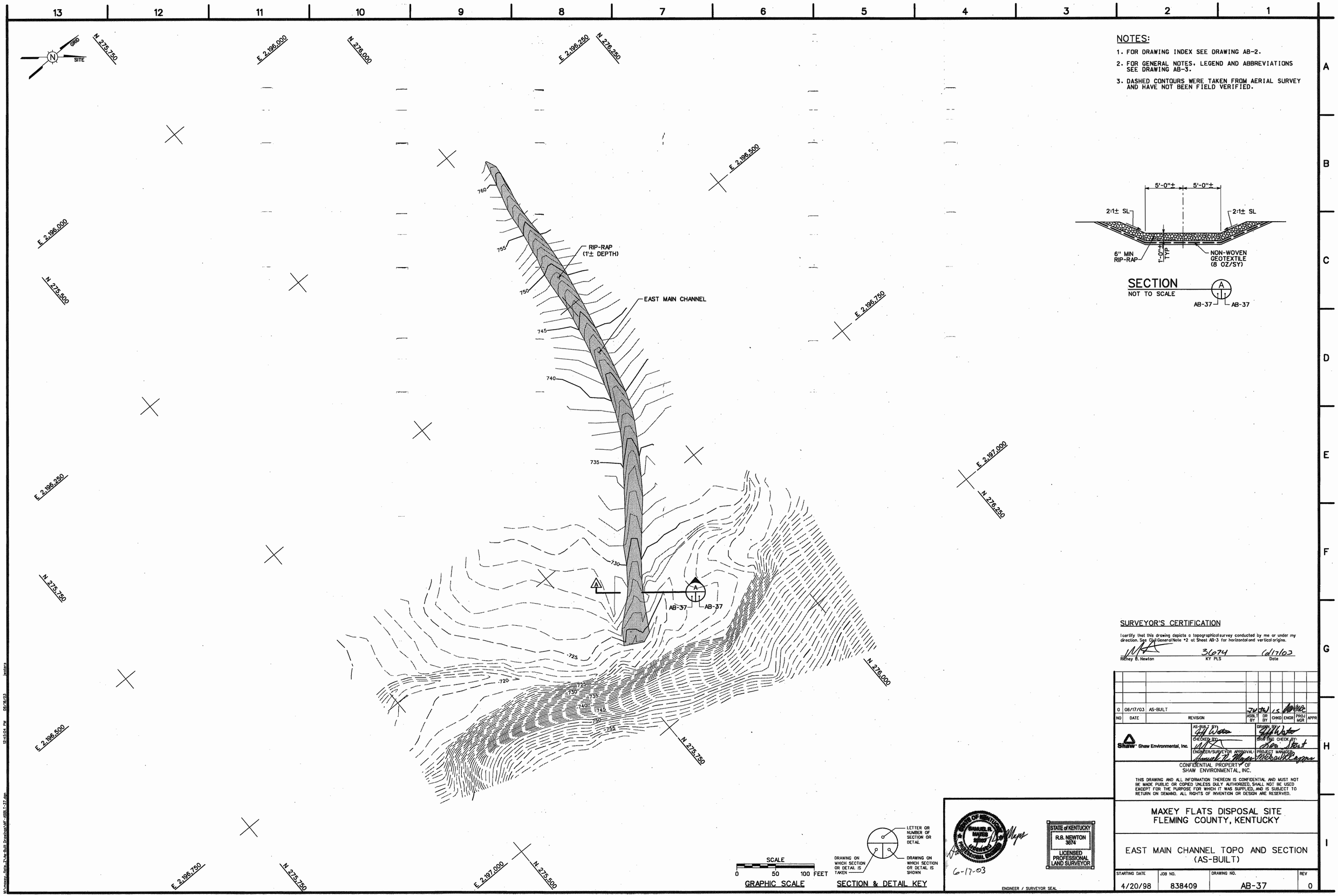

NOTES:

1. FOR DRAWING INDEX SEE DRAWING AB-2.
2. FOR GENERAL NOTES, LEGEND AND ABBREVIATIONS SEE DRAWING AB-3.
3. DASHED CONTOURS WERE TAKEN FROM AERIAL SURVEY AND HAVE NOT BEEN FIELD VERIFIED.

SECTION
NOT TO SCALE
A
AB-37 AB-37

SURVEYOR'S CERTIFICATION

I certify that this drawing depicts a topographical survey conducted by me or under my direction. See Civil General Note #2 at Sheet AB-3 for horizontal and vertical origins.

Richey B. Newton — 3674 KY PLS — 6/17/03 Date

NO	DATE	REVISION	ASBLT BY	DR BY	CHKD	ENGR	PROJ MGR	APPR
0	06/17/03	AS-BUILT	JW	JW	JS			

Shaw Environmental, Inc.

AS-BUILT BY: JW Watson
DRAWN BY: JW Watson
CHECKED BY: RBN
SUP TSD CHECK BY: Gary Hart
ENGINEER/SURVEYOR APPROVAL: Samuel R. Mayer
PROJECT MANAGER: Michael Rogers

CONFIDENTIAL PROPERTY OF
SHAW ENVIRONMENTAL, INC.

THIS DRAWING AND ALL INFORMATION THEREON IS CONFIDENTIAL AND MUST NOT BE MADE PUBLIC OR COPIED UNLESS DULY AUTHORIZED, SHALL NOT BE USED EXCEPT FOR THE PURPOSE FOR WHICH IT WAS SUPPLIED, AND IS SUBJECT TO RETURN ON DEMAND. ALL RIGHTS OF INVENTION OR DESIGN ARE RESERVED.

MAXEY FLATS DISPOSAL SITE
FLEMING COUNTY, KENTUCKY

EAST MAIN CHANNEL TOPO AND SECTION (AS-BUILT)

STARTING DATE	JOB NO.	DRAWING NO.	REV
4/20/98	838409	AB-37	0

SCALE
0 50 100 FEET
GRAPHIC SCALE

LETTER OR NUMBER OF SECTION OR DETAIL
DRAWING ON WHICH SECTION OR DETAIL IS TAKEN
DRAWING ON WHICH SECTION OR DETAIL IS SHOWN
SECTION & DETAIL KEY

STATE OF KENTUCKY SAMUEL R. MAYER 6-17-03 PROFESSIONAL ENGINEER
6-17-03

STATE of KENTUCKY R.B. NEWTON 3674 LICENSED PROFESSIONAL LAND SURVEYOR

ENGINEER / SURVEYOR SEAL

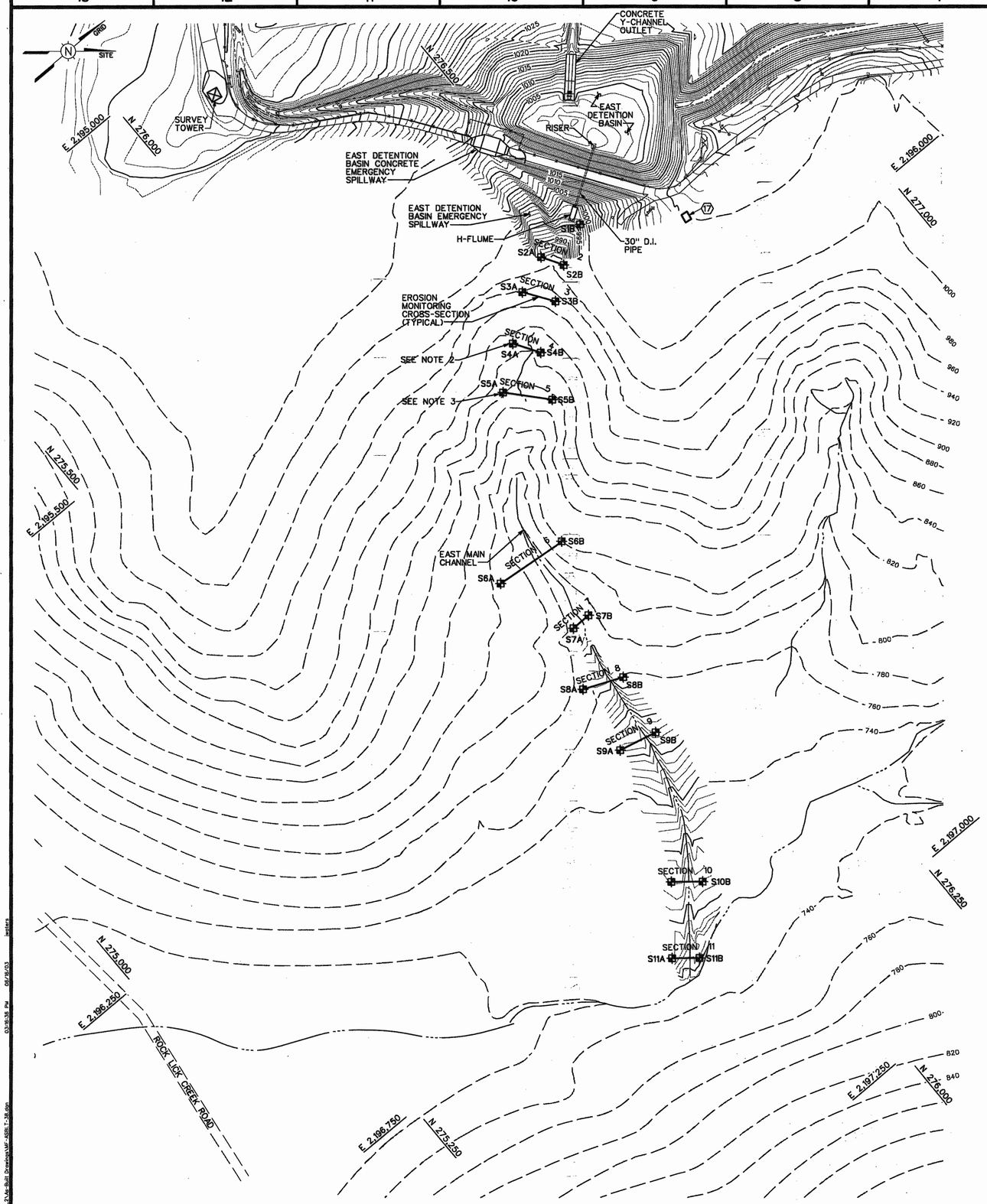

NOTES:

1. FOR EAST MAIN CHANNEL EROSION MONITORING CROSS-SECTIONS BY CURD SURVEYING, ENGINEERING & LAND CONSULTING, INC. ON MAY 12, 2003. SEE DRAWINGS AB-39 AND AB-40.
2. MONUMENT S4A MAY HAVE DROPED 0.04' IN ELEVATION FROM PREVIOUS SURVEYS, BUT SEEMS TO HAVE STABILIZED AT THE ELEVATION 907.31.
3. MONUMENT S5A MAY HAVE MOVED BY AS MUCH AS 0.05' HORIZONTALLY AND DROPPED 0.06' VERTICALLY OVER THE LAST TWO YEARS.
4. DASHED CONTOURS WERE TAKEN FROM AERIAL SURVEY AND HAVE NOT BEEN FIELD VERIFIED.

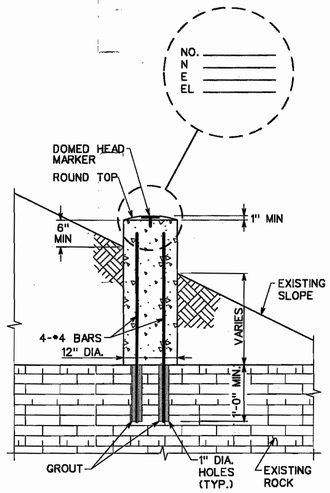

POINT MONUMENT IN EXISTING ROCK

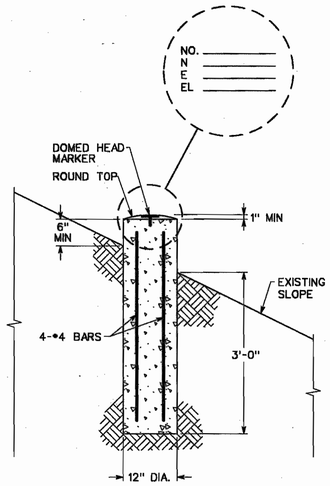

POINT MONUMENT IN EXISTING SOIL

DETAIL CROSS-SECTION CONTROL POINT MONUMENT
NOT TO SCALE

1 — AB-38 — AB-38

EAST MAIN CHANNEL EROSION MONITORING CROSS-SECTION CONTROL POINT COORDINATE TABLE			
Point No.	N	E	Elevation
S1B	N 276513.96	E 2195702.28	997.02
S2A	N 276420.92	E 2195702.56	988.82
S2B	N 276443.35	E 2195740.21	988.10
S3A	N 276353.90	E 2195729.70	960.76
S3B	N 276389.56	E 2195781.43	953.79
S4A	N 276280.81	E 2195790.25	907.31
S4B	N 276309.40	E 2195835.54	908.07
S5A	N 276209.92	E 2195847.48	885.28
S5B	N 276270.39	E 2195915.30	876.85
S6A	N 275983.12	E 2196113.02	817.58
S6B	N 276117.26	E 2196125.78	822.73
S7A	N 276032.86	E 2196260.70	771.61
S7B	N 276069.01	E 2196260.07	770.71
S8A	N 275974.43	E 2196358.06	771.09
S8B	N 276045.03	E 2196387.90	757.45
S9A	N 275955.19	E 2196487.14	747.28
S9B	N 276025.76	E 2196503.67	747.93
S10A	N 275873.50	E 2196731.13	733.19
S10B	N 275917.86	E 2196767.16	732.66
S11A	N 275784.98	E 2196839.58	727.90
S11B	N 275823.79	E 2196871.18	726.15

SEE NOTE 1

NO	DATE	REVISION	ASBLT BY	DR BY	CHKD	ENGR	PROJ MGR	APPR
0	06/17/03	AS-BUILT	JW	JW	LS			

Shaw Environmental, Inc.

AS-BUILT BY: Jeff Watts
DRAWN BY: Jeff Watts
CHECKED BY: WK
DRAWING CHECK BY: Jeri Stuart
ENGINEER/SURVEYOR APPROVAL: Samuel R. Mayes
PROJECT MANAGER: Michael Clymer

CONFIDENTIAL PROPERTY OF SHAW ENVIRONMENTAL, INC.

THIS DRAWING AND ALL INFORMATION THEREON IS CONFIDENTIAL AND MUST NOT BE MADE PUBLIC OR COPIED UNLESS DULY AUTHORIZED, SHALL NOT BE USED EXCEPT FOR THE PURPOSE FOR WHICH IT WAS SUPPLIED, AND IS SUBJECT TO RETURN ON DEMAND. ALL RIGHTS OF INVENTION OR DESIGN ARE RESERVED.

SCALE
0 100 200 FEET
GRAPHIC SCALE

LETTER OR NUMBER OF SECTION OR DETAIL
DRAWING ON WHICH SECTION OR DETAIL IS TAKEN
DRAWING ON WHICH SECTION OR DETAIL IS SHOWN
SECTION & DETAIL KEY

STATE OF KENTUCKY — SAMUEL R. MAYES — LICENSED PROFESSIONAL ENGINEER
6-17-03
ENGINEER / SURVEYOR SEAL

MAXEY FLATS DISPOSAL SITE
FLEMING COUNTY, KENTUCKY

EAST MAIN CHANNEL EROSION MONITORING CROSS-SECTION LAYOUT (AS-BUILT)

STARTING DATE	JOB NO.	DRAWING NO.	REV
4/01/03	838409	AB-38	0

SECTION 1
(SEE NOTE)

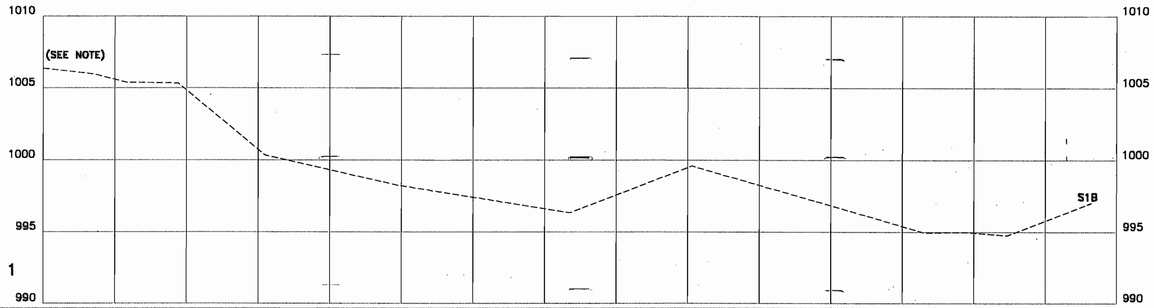

GROUND	1006.36	1005.96	1005.39	1005.34	1000.34	998.27	996.33	999.60	996.13	994.95	994.99	994.76	997.02
NOTE	GROUND AT APPROXIMATE LOCATION OF PROPOSED MON. S1A	RIPRAP BEGINS	RIPRAP CONTINUES TO GROUND AT MONUMENT
PARTIALS	7.21	4.40	7.19	12.14	18.45	24.14	17.08	24.36	8.14	5.67	5.69	11.83
STATIONS	0+00	0+07.21	0+10 0+11.61	0+18.80 0+20	0+30 0+30.33	0+40	0+48.28 0+50	0+60	0+70	0+73.52	0+80	0+90.60	1+00	1+10	1+14.96	1+20	1+23.10	1+28.67 1+30	1+34.65	1+40	1+46.48	1+50

NOTE:

MONUMENT S1A WHICH WAS DESTROYED DURING CONSTRUCTION BETWEEN MAY 2000 AND NOVEMBER 2000 HAS NOT BEEN REPLACED.

RIPRAP WAS ADDED TO A PORTION OF THE AREA PROFILED BY BY SECTION 1 AFTER MAY 2002.

SECTION 2

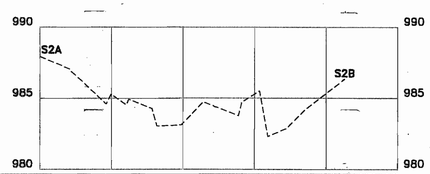

GROUND	987.83	987.10	984.50 985.28	984.54 984.84	984.27 983.05	983.11	984.74	983.76 984.71	985.51 982.30	982.87	984.18	986.36
NOTE	GROUND AT MONUMENT	APPROXIMATE LOCATION OF FLOWLINE UNCERTAIN DUE TO ROCK FILL PLACEMENT	GROUND AT MONUMENT
PARTIALS	3.97	5.77 0.78	2.14 0.33	3.24 0.88	3.43	3.05	4.91 0.46	2.49 1.16	2.61	2.60	5.53
STATIONS	0+00	0+03.97	0+09.24 0+09.56	0+12.68 0+12.41	0+15.65 0+16.33	0+19.77	0+22.82	0+27.73 0+28.19	0+30.01 0+30.58	0+31.84	0+34.46	0+37.05	0+40	0+42.59	0+50

SECTION 3

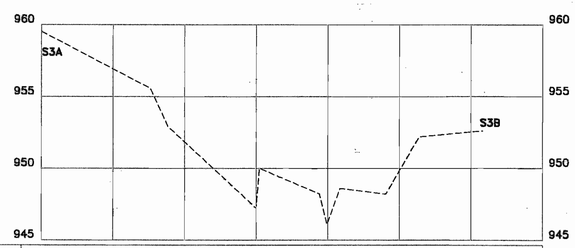

GROUND	959.54	955.59	952.92	947.25 950.02	948.23 949.41	948.62	948.22	952.21	952.62
NOTE	GROUND AT MONUMENT	FLOWLINE	GROUND AT MONUMENT
PARTIALS	15.19	2.48	12.31 0.46	8.39 0.27	1.80	6.39	4.67	8.88
STATIONS	0+00	0+10	0+15.19 0+17.66	0+20	0+29.97 0+30.43	0+38.82 0+38.69	0+41.69	0+48.08	0+50	0+52.75	0+60	0+61.53	0+70

SECTION 4

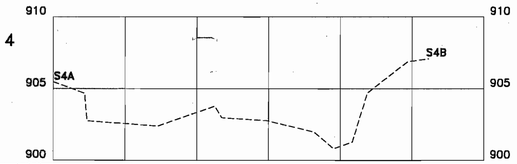

GROUND	905.46	904.67 902.75	902.39	903.77 902.97	902.77	901.98	900.80	901.28	904.69	906.87	907.06
NOTE	GROUND AT MONUMENT	FLOWLINE	GROUND AT MONUMENT
PARTIALS	4.36 0.33	9.78	8.03 0.99	6.22	8.60	2.78	2.59	2.08	5.60	2.85
STATIONS	0+00	0+04.36 0+04.68	0+10	0+14.46	0+20	0+23.49 0+23.48	0+29.71	0+36.31	0+39.08 0+40	0+41.58	0+43.76	0+49.36 0+50	0+52.31	0+60

SECTION 5

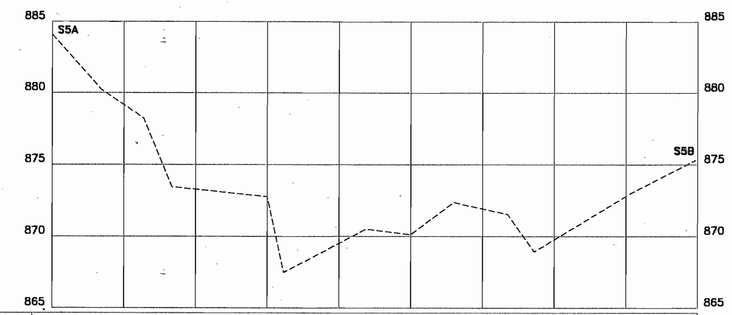

GROUND	884.07	880.21	878.21	873.44	872.76	867.47	870.50	870.12	872.36	871.54	868.92	873.00	875.30
NOTE	GROUND AT MONUMENT	FLOWLINE	GROUND AT MONUMENT
PARTIALS	6.84	5.90	3.96	13.28	2.30	11.46	6.22	6.01	7.53	3.70	13.50	8.96
STATIONS	0+00	0+06.84	0+10	0+12.74	0+16.70	0+20	0+30	0+32.28	0+40	0+43.75	0+49.96	0+55.97	0+60	0+63.49	0+67.20	0+70	0+80.70	0+89.66

VERTICAL SCALE: 1"=5'
0 5 10 FEET
HORIZONTAL SCALE: 1"=10'
0 10 20 FEET
GRAPHIC SCALE

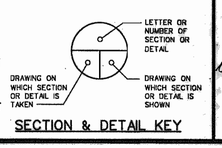

SECTION & DETAIL KEY

STATE OF KENTUCKY SAMUEL R. MAYES LICENSED PROFESSIONAL ENGINEER
6-17-03
ENGINEER / SURVEYOR SEAL

NO	DATE	REVISION	ASBL BY	DR BY	CHKD	ENGR	PROJ MGR	APPR
0	06/17/03	AS-BUILT	JW	JW	LS			

Shaw Shaw Environmental, Inc.
AS-BUILT BY: JW
DRAWN BY: JW
REVIEWED BY: LS
DRAWING CHECK BY: LS
ENGINEER/SURVEYOR APPROVAL: Samuel R. Mayes
PROJECT MANAGER: Michael Lappas

CONFIDENTIAL PROPERTY OF SHAW ENVIRONMENTAL, INC.

THIS DRAWING AND ALL INFORMATION THEREON IS CONFIDENTIAL AND MUST NOT BE MADE PUBLIC OR COPIED UNLESS DULY AUTHORIZED, SHALL NOT BE USED EXCEPT FOR THE PURPOSE FOR WHICH IT WAS SUPPLIED, AND IS SUBJECT TO RETURN ON DEMAND. ALL RIGHTS OF INVENTION OR DESIGN ARE RESERVED.

MAXEY FLATS DISPOSAL SITE
FLEMING COUNTY, KENTUCKY

EAST MAIN CHANNEL EROSION MONITORING CROSS-SECTIONS (AS-BUILT)

STARTING DATE	JOB NO.	DRAWING NO.	REV
5/22/03	838409	AB-39	0

M:\maxey_flats_2\As-Built Drawings\MF-ASBL1-39.dgn 12:47:49 PM 06/16/03 jwalters

SECTION 6

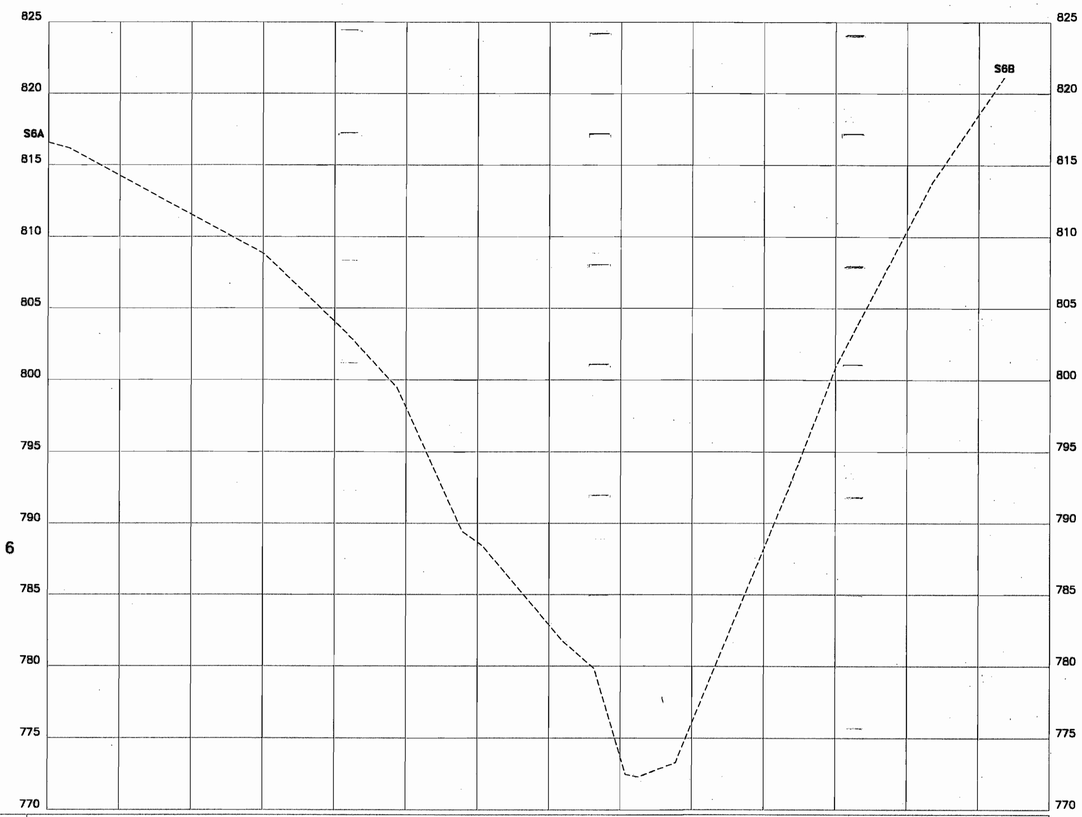

| | | |

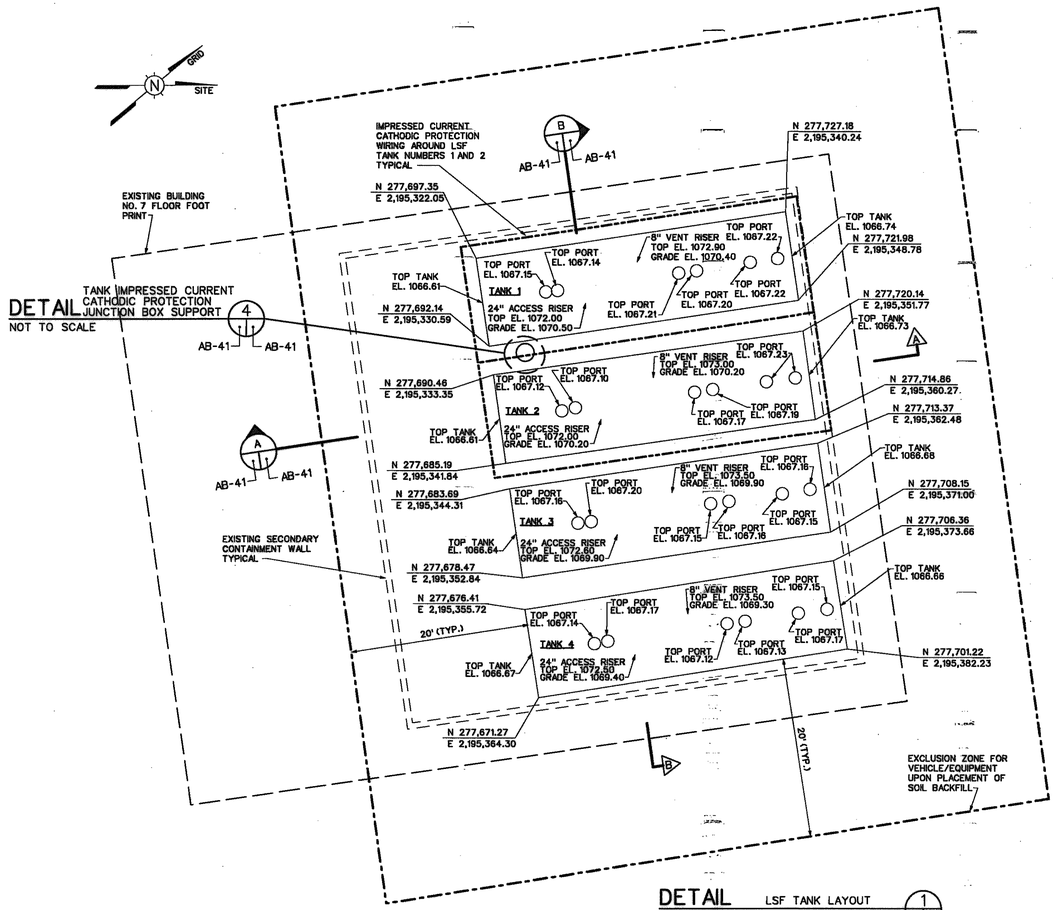

DETAIL 1 — LSF TANK LAYOUT

SCALE: NTS

DETAIL 4 — TANK IMPRESSED CURRENT CATHODIC PROTECTION JUNCTION BOX SUPPORT

NOT TO SCALE

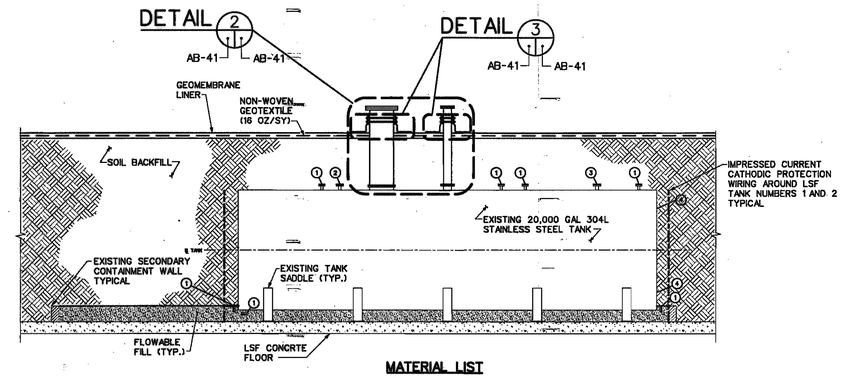

MATERIAL LIST

1. 2" 150# STAINLESS STEEL BLIND PLATE FLANGE W/ GASKET
2. 2½" 150# STAINLESS STEEL BLIND PLATE FLANGE W/ GASKET
3. 3" 150# STAINLESS STEEL BLIND PLATE FLANGE W/ GASKET
4. 1" STAINLESS STEEL PLUGS

SECTION A

SCALE: NTS

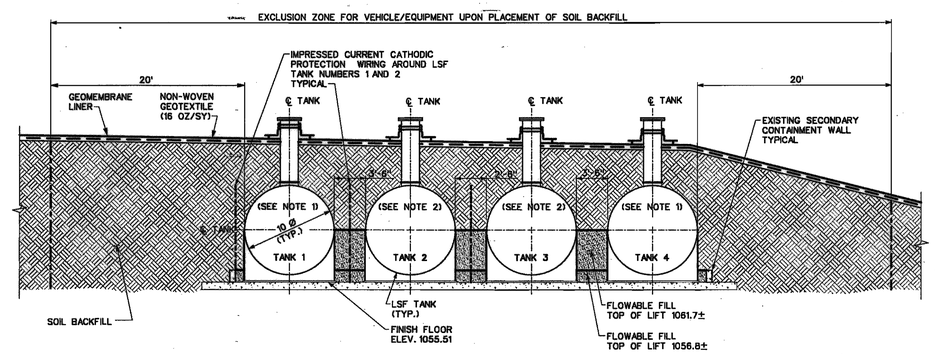

SECTION B

SCALE: NTS

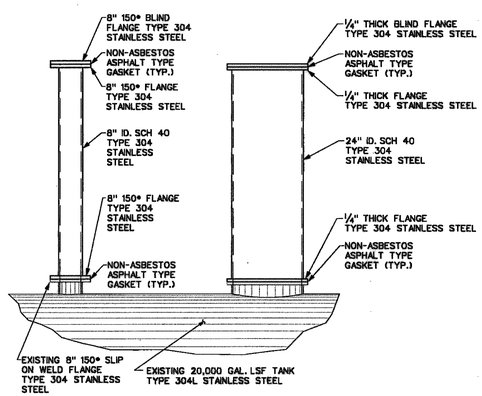

DETAIL 2 — TYPICAL 8" VENT AND 24" MANWAY

SCALE: NTS

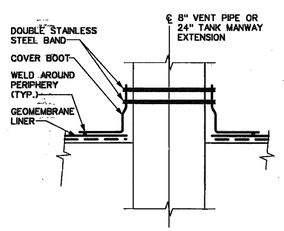

DETAIL 3 — VENT PIPE OR TANK MANWAY PENETRATION

SCALE: NTS

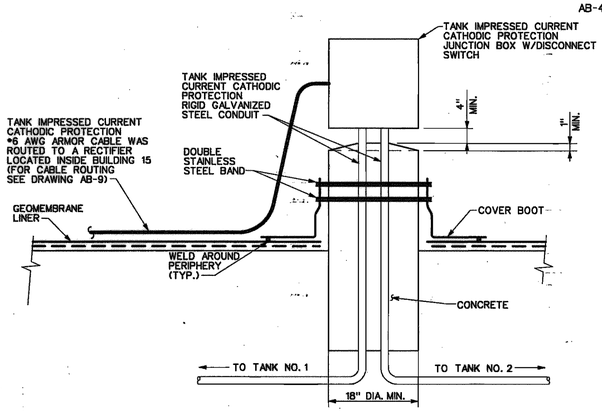

DETAIL 4 — TANK IMPRESSED CURRENT CATHODIC PROTECTION JUNCTION BOX SUPPORT

NOT TO SCALE

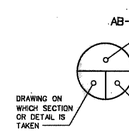

DETAIL KEY

NOTES:

1. LSF TANK 4 CONTAINS DRY ACTIVE WASTE AND IS CLOSED OUT.
2. LSF TANKS 2 AND 3 ARE CLOSED OUT.
3. LSF TANK REMAINS OPEN FOR FUTURE NON-LIQUID WASTE DISPOSAL BY THE COMMONWEALTH OF KENTUCKY.
4. FOR TANK IMPRESSED CURRENT CATHODIC PROTECTION INFORMATION REFER TO THE EPA APPROVED OPERATION AND MAINTENANCE REQUIREMENT SUMMARY FOR THE INITIAL REMEDIAL PHASE REMEDIAL ACTION, ADDENDUM.

SURVEYOR'S CERTIFICATION

I certify that this drawing depicts details of a topographical survey conducted by me or under my direction. This certification pertains to planimetric and vertical locations only. See Civil General Note #2 at Sheet AB-3 for horizontal and vertical origins.

Rickey B. Newton — 3674 KY PLS — 6/17/03 Date

NO	DATE	REVISION	ASBLT BY	DR BY	CHKD	ENGR	PROJ MGR	APPR
0	06/17/03	AS-BUILT	JW	JW	LS			

Shaw Environmental, Inc.

AS-BUILT BY: JW Water — DRAWN BY: JW Water
CHECKED BY: — DRAWING CHECK BY: Lori Stout
ENGINEER/SURVEYOR APPROVAL: Samuel R. Mayer — PROJECT MANAGER: Michael Rapp

CONFIDENTIAL PROPERTY OF SHAW ENVIRONMENTAL, INC.

THIS DRAWING AND ALL INFORMATION THEREON IS CONFIDENTIAL AND MUST NOT BE MADE PUBLIC OR COPIED UNLESS DULY AUTHORIZED, SHALL NOT BE USED EXCEPT FOR THE PURPOSE FOR WHICH IT WAS SUPPLIED, AND IS SUBJECT TO RETURN ON DEMAND. ALL RIGHTS OF INVENTION OR DESIGN ARE RESERVED.

STATE OF KENTUCKY — SAMUEL R. MAYER 22208 — LICENSED PROFESSIONAL ENGINEER — 6-17-03

STATE OF KENTUCKY — R.B. NEWTON 3674 — LICENSED PROFESSIONAL LAND SURVEYOR

ENGINEER / SURVEYOR SEAL

MAXEY FLATS DISPOSAL SITE
FLEMING COUNTY, KENTUCKY

LSF TANKS LAYOUT, SECTIONS, AND DETAILS (AS-BUILT)

STARTING DATE	JOB NO.	DRAWING NO.	REV
4/28/03	838409	AB-41	0

I:\Maxey_Flats_2\As-Built Drawings\MF-ASBLT-41.dgn 12:50:13 PM 06/18/03 jestors

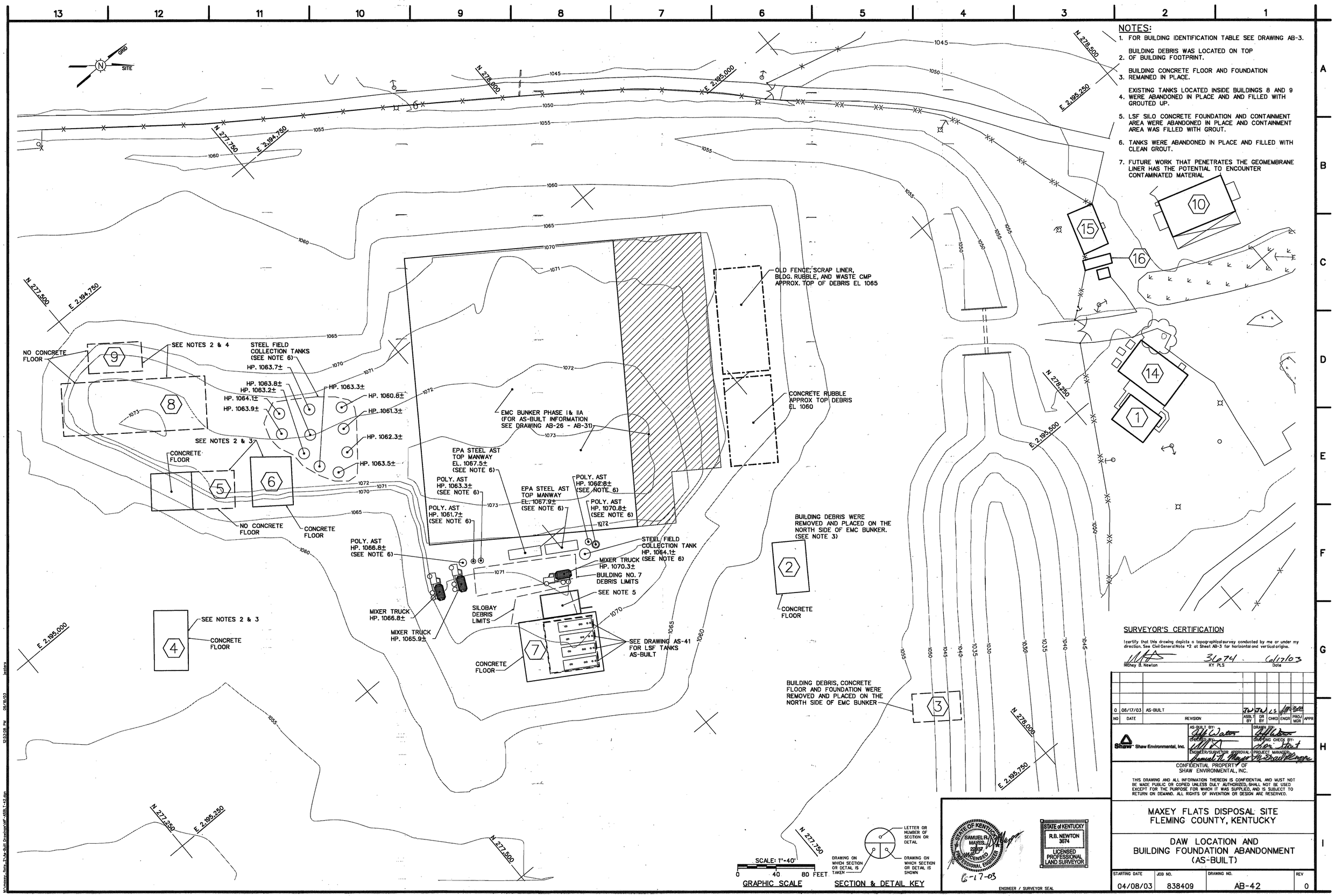

NOTES:

1. FOR BUILDING IDENTIFICATION TABLE SEE DRAWING AB-3.
2. BUILDING DEBRIS WAS LOCATED ON TOP OF BUILDING FOOTPRINT.
3. BUILDING CONCRETE FLOOR AND FOUNDATION REMAINED IN PLACE.
4. EXISTING TANKS LOCATED INSIDE BUILDINGS 8 AND 9 WERE ABANDONED IN PLACE AND AND FILLED WITH GROUTED UP.
5. LSF SILO CONCRETE FOUNDATION AND CONTAINMENT AREA WERE ABANDONED IN PLACE AND CONTAINMENT AREA WAS FILLED WITH GROUT.
6. TANKS WERE ABANDONED IN PLACE AND FILLED WITH CLEAN GROUT.
7. FUTURE WORK THAT PENETRATES THE GEOMEMBRANE LINER HAS THE POTENTIAL TO ENCOUNTER CONTAMINATED MATERIAL

SURVEYOR'S CERTIFICATION

I certify that this drawing depicts a topographical survey conducted by me or under my direction. See Civil General Note #2 at Sheet AB-3 for horizontal and vertical origins.

Richey B. Newton — 3674 KY PLS — 6/17/03 Date

NO	DATE	REVISION	ASBLT BY	DR BY	CHKD	ENGR	PROJ MGR	APPR
0	05/17/03	AS-BUILT	JW	JW	LS			

Shaw Shaw Environmental, Inc.

AS-BUILT BY: JW; DRAWN BY: JW; CHECKED BY: LS; DRAWING CHECK BY: Jason Stout; ENGINEER/SURVEYOR APPROVAL: Samuel R. Mayes; PROJECT MANAGER: Ronald W. Brewer

CONFIDENTIAL PROPERTY OF SHAW ENVIRONMENTAL, INC.

THIS DRAWING AND ALL INFORMATION THEREON IS CONFIDENTIAL AND MUST NOT BE MADE PUBLIC OR COPIED UNLESS DULY AUTHORIZED, SHALL NOT BE USED EXCEPT FOR THE PURPOSE FOR WHICH IT WAS SUPPLIED, AND IS SUBJECT TO RETURN ON DEMAND. ALL RIGHTS OF INVENTION OR DESIGN ARE RESERVED.

MAXEY FLATS DISPOSAL SITE
FLEMING COUNTY, KENTUCKY

DAW LOCATION AND BUILDING FOUNDATION ABANDONMENT (AS-BUILT)

STARTING DATE	JOB NO.	DRAWING NO.	REV
04/08/03	838409	AB-42	0

\\Maxey_Flats_Site\As-Built Drawings\AF-AS5_1-42.dgn 12:53:08 PM 06/16/03 jwalters

NOTES:

1. FOR DRAWING INDEX SEE DRAWING AB-2.
2. FOR GENERAL NOTES, LEGEND AND ABBREVIATIONS SEE DRAWING AB-3
3. BORROW PIT AS-BUILT SURVEY WAS PERFORMED BY CURD SURVEYING, ENGINEERING & LAND CONSULTING, INC. ON MAY 13, 2003.

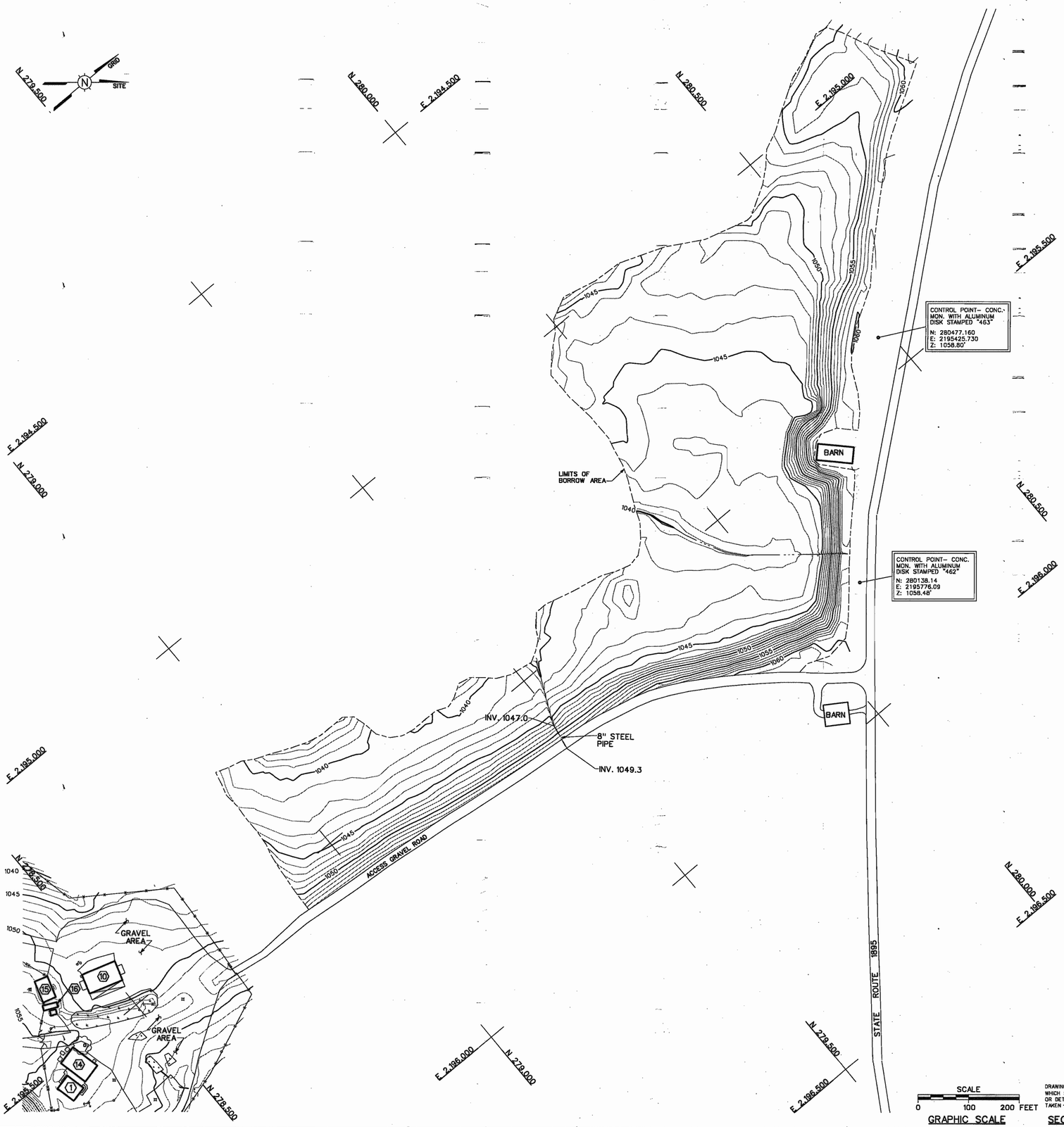

SCALE
0 100 200 FEET
GRAPHIC SCALE

DRAWING ON WHICH SECTION OR DETAIL IS TAKEN
LETTER OR NUMBER OF SECTION OR DETAIL
DRAWING ON WHICH SECTION OR DETAIL IS SHOWN
SECTION & DETAIL KEY

STATE OF KENTUCKY
SAMUEL R. MAYES
22811
LICENSED
PROFESSIONAL ENGINEER
6-17-03
ENGINEER / SURVEYOR SEAL

NO	DATE	REVISION	ASBLT BY	DR BY	CHKD	ENGR	PROJ MGR	APPR
0	06/17/03	AS-BUILT	JW	JW	J.S.			

Shaw Shaw Environmental, Inc.

AS-BUILT BY: Jeff Watts
DRAWN BY: Jeff Watts
CHECKED BY:
DRAFTING CHECK BY:
ENGINEER/SURVEYOR APPROVAL: Samuel R. Mayes
PROJECT MANAGER: Richard Wagner

CONFIDENTIAL PROPERTY OF SHAW ENVIRONMENTAL, INC.

THIS DRAWING AND ALL INFORMATION THEREON IS CONFIDENTIAL AND MUST NOT BE MADE PUBLIC OR COPIED UNLESS DULY AUTHORIZED, SHALL NOT BE USED EXCEPT FOR THE PURPOSE FOR WHICH IT WAS SUPPLIED, AND IS SUBJECT TO RETURN ON DEMAND. ALL RIGHTS OF INVENTION OR DESIGN ARE RESERVED.

MAXEY FLATS DISPOSAL SITE
FLEMING COUNTY, KENTUCKY

BORROW PIT AREA
(AS-BUILT)

STARTING DATE	JOB NO.	DRAWING NO.	REV
4/30/03	838409	AB-43	0

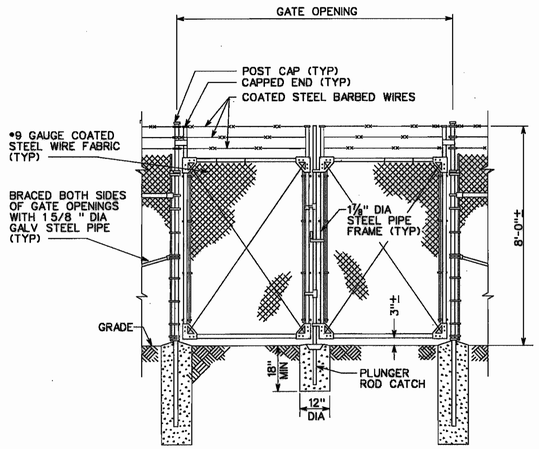

GATE POSTS
ONE LEAF OF DOUBLE GATES:
13' TO 18' 6 5/8" DIA

DETAIL DOUBLE GATE (6) AB-4 AB-44
SCALE: NTS

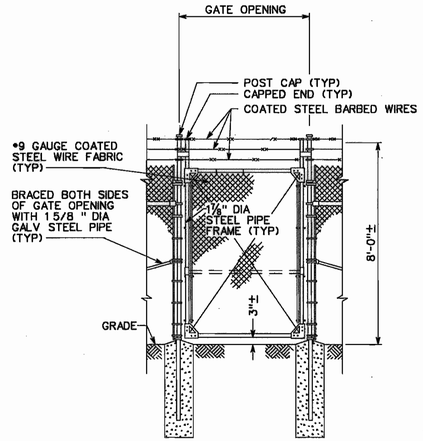

GATE POSTS
SINGLE GATE:
0' TO 6' 2 7/8" DIA

DETAIL MANWAY GATE (7) AB-4 AB-44
SCALE: NTS

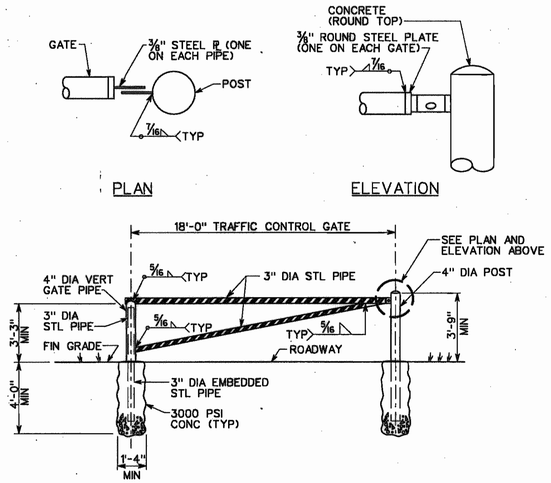

DETAIL TRAFFIC CONTROL GATE (2) AB-19 AB-44
SCALE: NOT TO SCALE

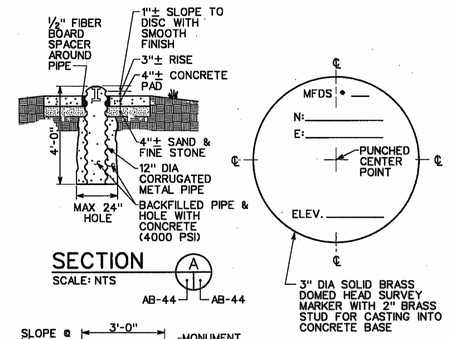

SECTION (A) AB-44 AB-44
SCALE: NTS

DETAILED BRASS DISC
NOT TO SCALE

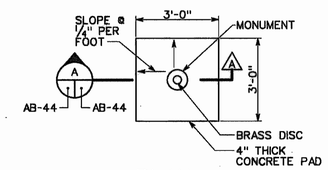

PLAN
SCALE: NTS

DETAIL PERMANENT SITE CONTROL MONUMENT (1) AB-4 AB-44
SCALE: NTS

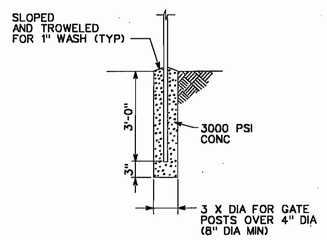

FOR LINE, CORNER, AND END POSTS

DETAIL (TYP) CONCRETE FOOTING (4) AB-4 AB-44
SCALE: NTS

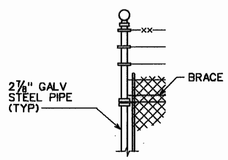

DETAIL END POST (5) AB-4 AB-44
SCALE: NTS

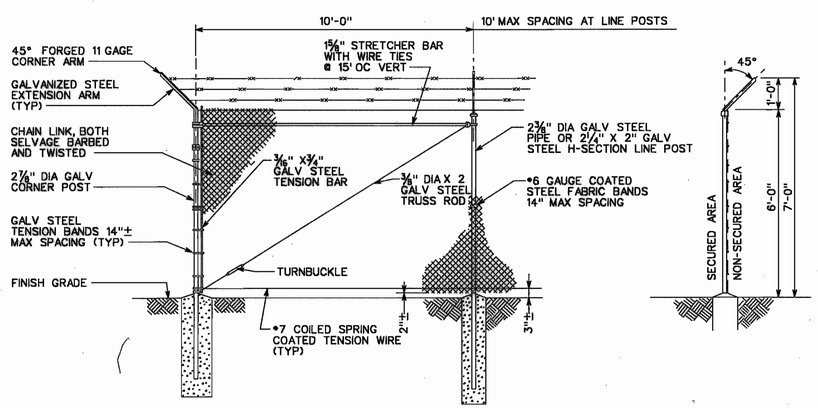

CORNER POST LINE POST EL OF LINE POST

DETAIL (TYP) SECURITY FENCE (3) AB-4 AB-44
SCALE: NTS

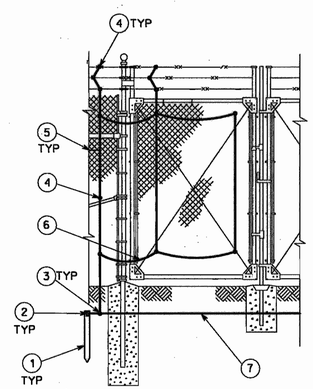

MATERIAL LIST

1. GROUND ROD. COPPERWELD TYPE 3/4" DIA X 10 FT LONG
2. CONNECTOR. FOR CONNECTING SIZE 1/0 AWG CABLE TO 3/4" DIA GROUND ROD. APPROVED TYPE COMPRESSION CONNECTOR.
3. CONNECTOR. FOR CONNECTING #1/0 GROUND BUS TO #4 AWG TAP AT RIGHT ANGLES. APPROVED TYPE COMPRESSION CONNECTOR.
4. CONNECTOR. FOR CABLE TO CABLE BURNDY SERVIT TYPE KS. OR EQUAL. SIZE AS REQUIRED.
5. CONNECTOR. BARE COPPER. STRANDED. SIZE #4 AWG
6. BRAID. FLEXIBLE. 15/16" WIDE BARE COPPER. (#4 AWG EQUIVALENT).
7. CONDUCTOR. BARE COPPER STRANDED. SIZE #1/0 AWG (CONNECT TO OPPOSITE SIDE OF DOUBLE GATE UNDERGROUND GROUNDING).

GROUNDING NOTES

1. FENCES WERE GROUNDED AS FOLLOWS:
   A. IMMEDIATELY ADJACENT TO VEHICLE AND PEDESTRIAN GATES.
   B. THE FENCE WAS GROUNDED AT POWER LINE CROSSING, 150 FEET EITHER SIDE OF THE CROSSING, AND AT APPROXIMATELY 150 FEET INTERVALS FOR THE REMAINDER OF FENCE BOUNDARY.
2. ALL GROUND RODS WERE DRIVEN ON THE OUTSIDE OF AND AS CLOSE AS PRACTICAL TO THE FENCE. THE TOPS OF THE RODS WAS DRIVEN 12" BELOW GRADE.
3. ALL GROUND ELECTRODE CONDUCTORS WERE CONNECTED TO GROUND RODS BY APPROVED TYPE COMPRESSION CONNECTOR.

DETAIL FENCE GROUNDING (8) AB-4 AB-44
SCALE: NTS

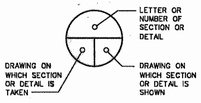

SECTION & DETAIL KEY

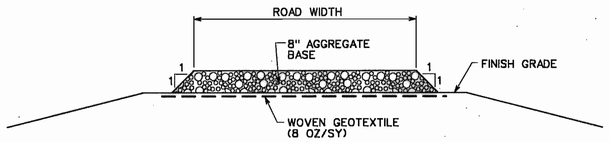

TYPICAL ROAD SECTION
SCALE: NTS

STATE OF KENTUCKY SAMUEL R. MAYES 22007 LICENSED PROFESSIONAL ENGINEER
6-17-03
ENGINEER / SURVEYOR SEAL

NO	DATE	REVISION	ASBLT BY	DR BY	CHKD	ENGR	PROJ MGR	APPR
0	06/17/03	AS-BUILT	JWJ	JWJ	VS			

Shaw Shaw Environmental, Inc.
AS-BUILT BY: DRAWN BY:
CHECKED BY: DRAFTING CHECK BY:
ENGINEER/SURVEYOR APPROVAL: PROJECT MANAGER:

CONFIDENTIAL PROPERTY OF SHAW ENVIRONMENTAL, INC.

THIS DRAWING AND ALL INFORMATION THEREON IS CONFIDENTIAL AND MUST NOT BE MADE PUBLIC OR COPIED UNLESS DULY AUTHORIZED, SHALL NOT BE USED EXCEPT FOR THE PURPOSE FOR WHICH IT WAS SUPPLIED, AND IS SUBJECT TO RETURN ON DEMAND. ALL RIGHTS OF INVENTION OR DESIGN ARE RESERVED.

MAXEY FLATS DISPOSAL SITE
FLEMING COUNTY, KENTUCKY

MISCELLANEOUS DETAILS
(AS-BUILT)

STARTING DATE	JOB NO.	DRAWING NO.	REV
4/17/03	838409	AB-44	0